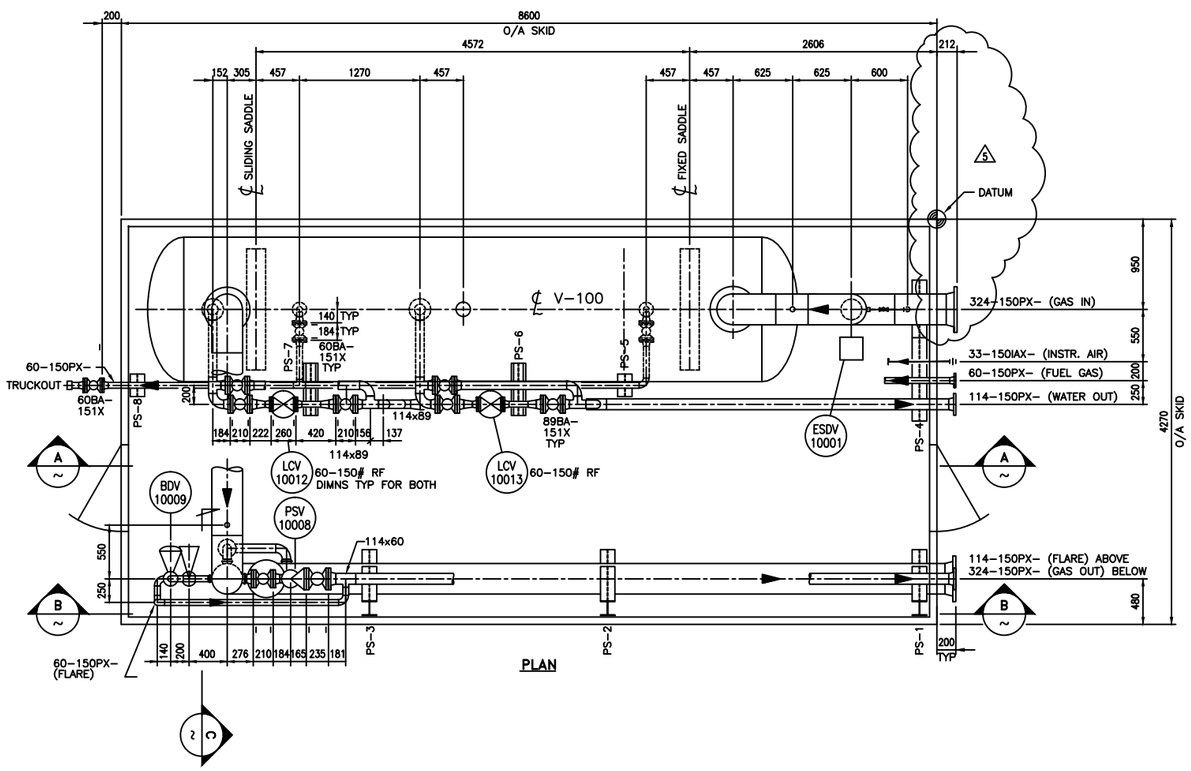

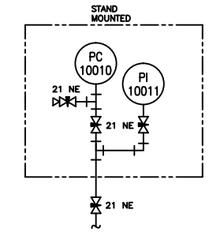

DETAIL 1

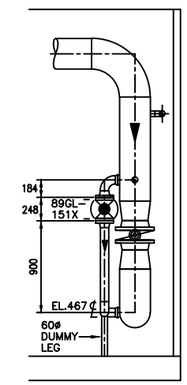

C SECTION

GENERAL NOTES

1. THE MANUFACTURER IS TO SUPPLY THE FOLLOWING :
   - PIPE, FITTINGS, STUDS, NUTS, GASKETS, CLAMPS, U-BOLTS, PIPE SHOES STAINLESS STEEL TUBING,TUBE FITTINGS AND PIPE INSULATION.

   INSTRUMENTATION, TUBING & TUBE FITTINGS

   - ALL INSTRUMENTATION TUBING IS TO BE SWAGELOK STAINLESS STEEL. ~~ALL INSTRUMENTATION VENTS ARE TO BE MANIFOLDED AND VENTED TO THE OUTSIDE OF BUILDING.~~ EACH INSTRUMENT SHALL HAVE A VALVED TAKE-OFF FROM THE SUPPLY HEADER AND WILL BE COMPLETE WITH ARMOUR CHANNEL TO ITS LOCATION.

2. TRIDENT EXPLORATION SHALL SUPPLY THE FOLLOWING FOR INSTALLATION BY THE SKID MANUFACTURER :
   - ALL INSTRUMENTATION AS DESCRIBED IN THE PURCHASE ORDERS.
   - TWO (2) CATADYNE BUILDING HEATERS
   - ONE (1) INLET SEPARATOR 1549 DIA X 6096 S/S TAGGED V-100

   VALVES

   ALL VALVES ARE TO BE SWEET TRIM WITH THE FOLLOWING MAKES BEING ACCEPTABLE:
   BALL VALVES - KOUKA
   CHECK VALVES - KOUKA
   GLOBE VALVES - KOUKA
   NEEDLE VALVES - KOUKA

3. MATERIALS OF CONSTRUCTION

   PIPE: - ALL WELDED PIPE 60ø & LARGER 150# ANSI TO BE A106B, SCH.40
   - ALL SCREWED PIPE 60ø & SMALLER TO BE A106B, SCH. 80
   - ALL PIPE NIPPLES TO BE SCH. 160

   WELD FITTINGS - A234-WPB
   FLANGES - A-105
   SCREWED FITTINGS - A-105, 3000# F.S.
   STUDS AND NUTS - A193-B7, A194-2H
   GASKETS - 3mm THK. FLEXITALLIC, T316SS (OR EQUAL)

4. TESTING
   - ALL PIPING DESIGNATED PX TO HAVE 10% RADIOGRAPHIC INSPECTION OF ALL WELDED PIPE JOINTS.
   - ALL PIPING TO BE HYDROTESTED TO 1.5 x THE FLANGE RATING.

5. APPLICABLE CODES

   PIPING - ANSI B31.3
   VESSELS - ASME SEC. VIII, DIV. 1 (LATEST REVISION)

6. SURFACE PREPARATION

   SKIDS AND SUPPORTS
   - MECHANICAL CLEAN TO SSPC-SP2
   - PRIME WITH 1 s/c CLOVERDALE RUSTEX 71029
   - FINISH WITH 1 s/c CLOVERDALE (COLORS AS PER TRIDENT'S PAINTING SPECIFICATIONS)

   PIPING AND OTHER EQUIPMENT
   - COMMERCIAL SANDBLAST TO SSPC-SP6
   - PRIME WITH 1 s/c CLOVERDALE RUSTEX 71029
   - FINISH WITH 1 s/c CLOVERDALE (COLORS AS PER TRIDENT'S PAINTING SPECIFICATIONS)

7. ALL OPEN ENDS OF PIPE TO BE COVERED FOR SHIPPING. SKID MANUFACTURER SHALL LOAD SKID PACKAGE ON A FORT ENERGY CORPORATION SUPPLIED TRUCK.
8. ALL LINES ARE TO BE ADEQUATELY SUPPORTED, CLAMPED & SHIMMED.
9. PIPING SHALL BE ADEQUATELY BRACED TO PREVENT SHIPPING DAMAGE OR SHALL BE REMOVED FOR REASSEMBLY ON SITE BY OTHERS.
10. PIPE SUPPORT LOCATIONS ARE SHOWN ON THE PIPING PLAN AND SECTIONS. THE SKID MANUFACTURER IS TO VERIFY PIPE SUPPORT LOCATIONS PRIOR TO WELDING SUPPORTS TO SKID.
11. INSTRUMENTS TO BE "GANGED" OR RACK MOUNTED TO THE ELECTRICAL CONDUIT SYSTEM WHEREVER POSSIBLE.
12. THE SKID MANUFACTURER IS TO CALCULATE THE ESTIMATED SHIPPING WEIGHT OF THE SKID PACKAGE.
13. ALL ITEMS SHALL BE REGISTERED FOR ALBERTA LOCATION 05-26-35-21 W4M.

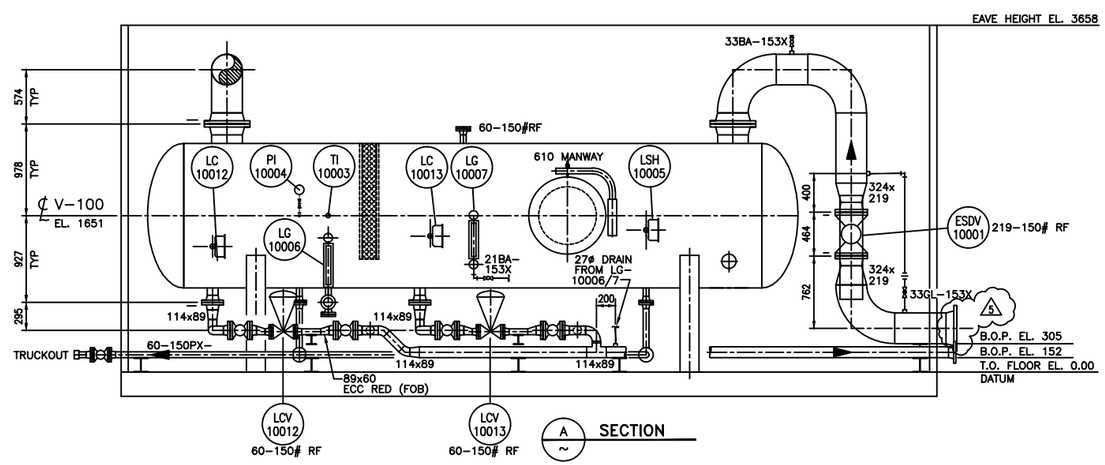

A SECTION

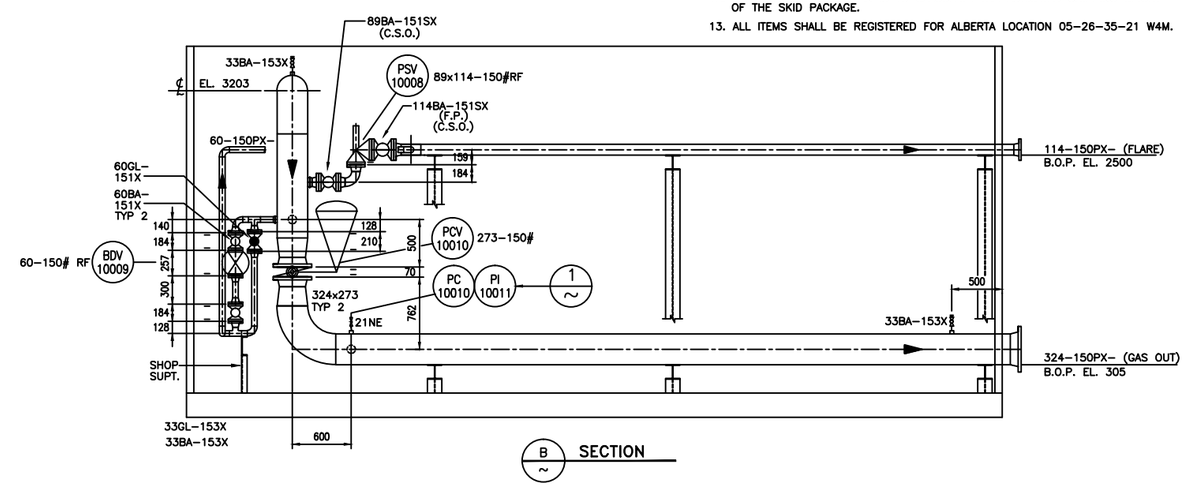

B SECTION

NO.	REVISION	PROJ. No.	BY	DATE	CHK.	DATE
.						
.						
.						
5	REVISED NOZZLE PROJECTION	43759	BF	04.12.10	JR	04.12.10
4	ADDED VALVES	43759	BF	04.12.01	JR	04.12.01
3	REMOVED VALVES & LSL, CHANGED LINE SIZE	43759	LS	04.11.04	CK	04.11.04
2	REVISED BYPASS	43759	LS	04.10.28	CK	04.10.28
1	ISSUED FOR CONSTRUCTION	43759	LS	04.10.21	CK	04.10.15
0	ISSUED FOR BID	43759	LS	04.10.07		

PERMIT STAMP:

GENERAL NOTES:

1. "POST CONSTRUCTION DRAWINGS" ARE GENERATED FROM CONSTRUCTION CHANGE INFORMATION FURNISHED TO BOWER DAMBERGER ROLSETH ENGINEERING LTD. BY THE OWNER'S FIELD SUPERVISORS AND OR HIRED CONTRACTORS. ALL CHANGES DOCUMENTED WILL NOT APPEAR ON THE "POST CONSTRUCTION" DRAWINGS. THIS DRAWING MAY NOT BE AN ACCURATE REPRESENTATION OF THE CONSTRUCTED FACILITY.
2. PRIOR TO THE COMMENCEMENT OF ANY CONSTRUCTION ACTIVITY, CONTRACTORS MUST CONTACT THE OWNER OR OF THE OWNER REPRESENTATIVE TO VERIFY THE LOCATION AND STATUS OF ANY PIPING, ELECTRICAL, EQUIPMENT OR BUILDINGS.
3. ANY REVISIONS MADE TO EXISTING EQUIPMENT, PIPING OR ELECTRICAL ON A FACILITY NOT DESIGNED BY B.D.R. ENG. LTD. IS ONLY SHOWN AS A REPRESENTATION OF WHAT EXISTS AND MUST BE VERIFIED BY THE OWNER.

	BY	DATE
DRN.	LS	04.10.07
CHK.	CK	04.10.15
APP'D.		
L.S.D.		

bdr
Bower Damberger Rolseth Engineering Ltd.

TRIDENT EXPLORATION CORP.

CBM COMPRESSOR STATION
INLET SEPARATOR SKID PIPING DETAILS

SCALE	DRAWING NUMBER	REV
1:30	D-43759-P-01-01	5