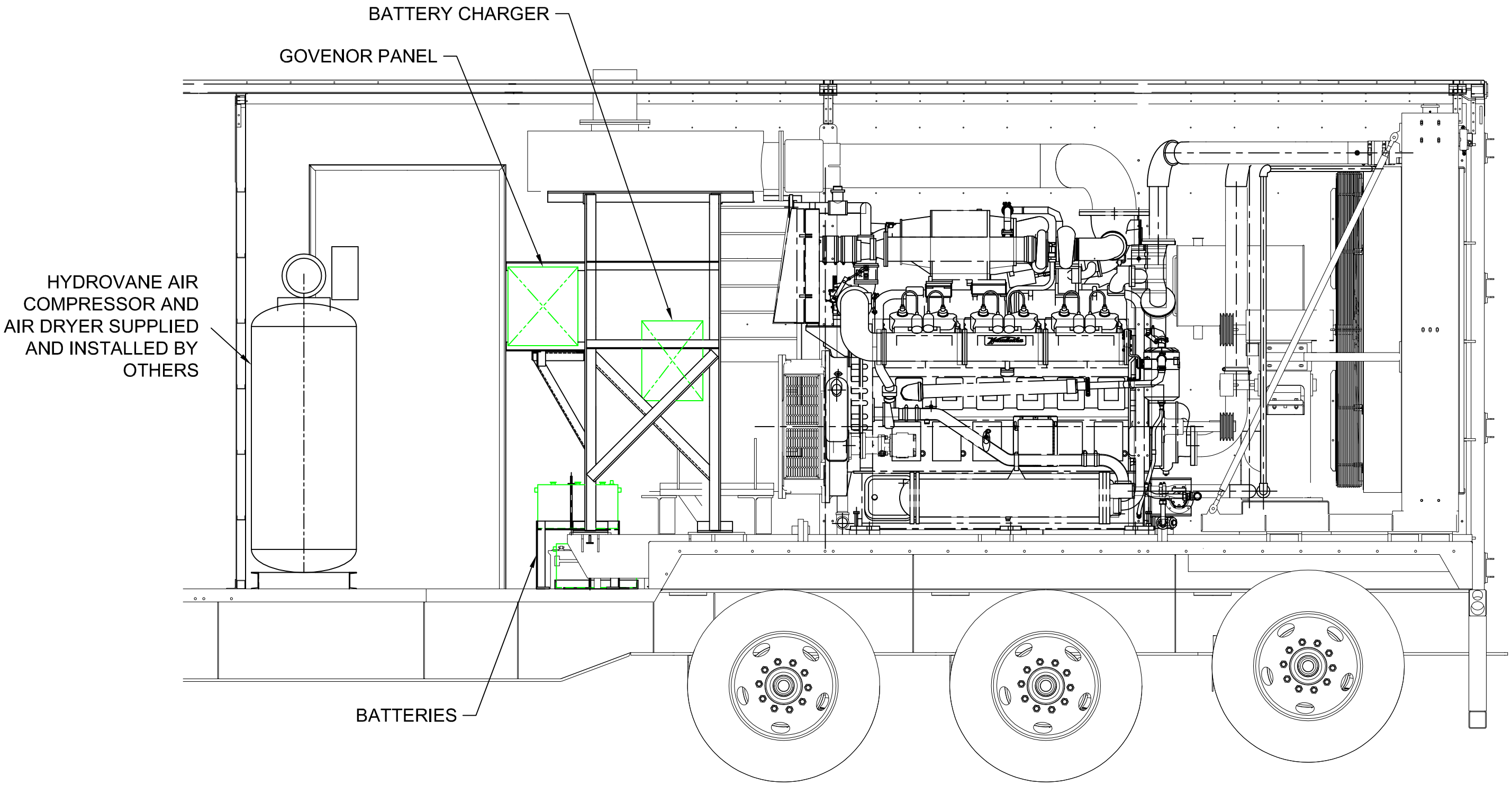

DWG NO.	REFERENCE DRAWINGS	NO.	DESCRIPTION	BY	DATE	BY	DATE	BY	DATE	DATE	DESCRIPTION
			REVISIONS	DRAWN BY		CHECKED BY		DESIGNED BY		STATUS	

SIMSON MAXWELL

CUSTOMER: KILOWATTS DESIGN COMPANY

GASFRAC PRIME POWER GENSET

DESCRIPTION: SIDE ELEVATION

SCALE: NTS

DRAWING NUMBER:

REV.: 0