ZONE	REV LTR	DESCRIPTION	REVISED BY	DATE	APPR
mtpl	C	ADDED 2ND TRIM HTR, LBLD VLVS	rjwjr	28NOV10	
mtpl	D	MULTIPLE CHANGES	rjwjr	15DEC10	
mtpl	E	ADDED 2 VENT OUTLET VLVS/TMP XMITTERS	rjwjr	30DEC10	
mtpl	G	MULTIPLE CHANGES	rjwjr	26JAN12	

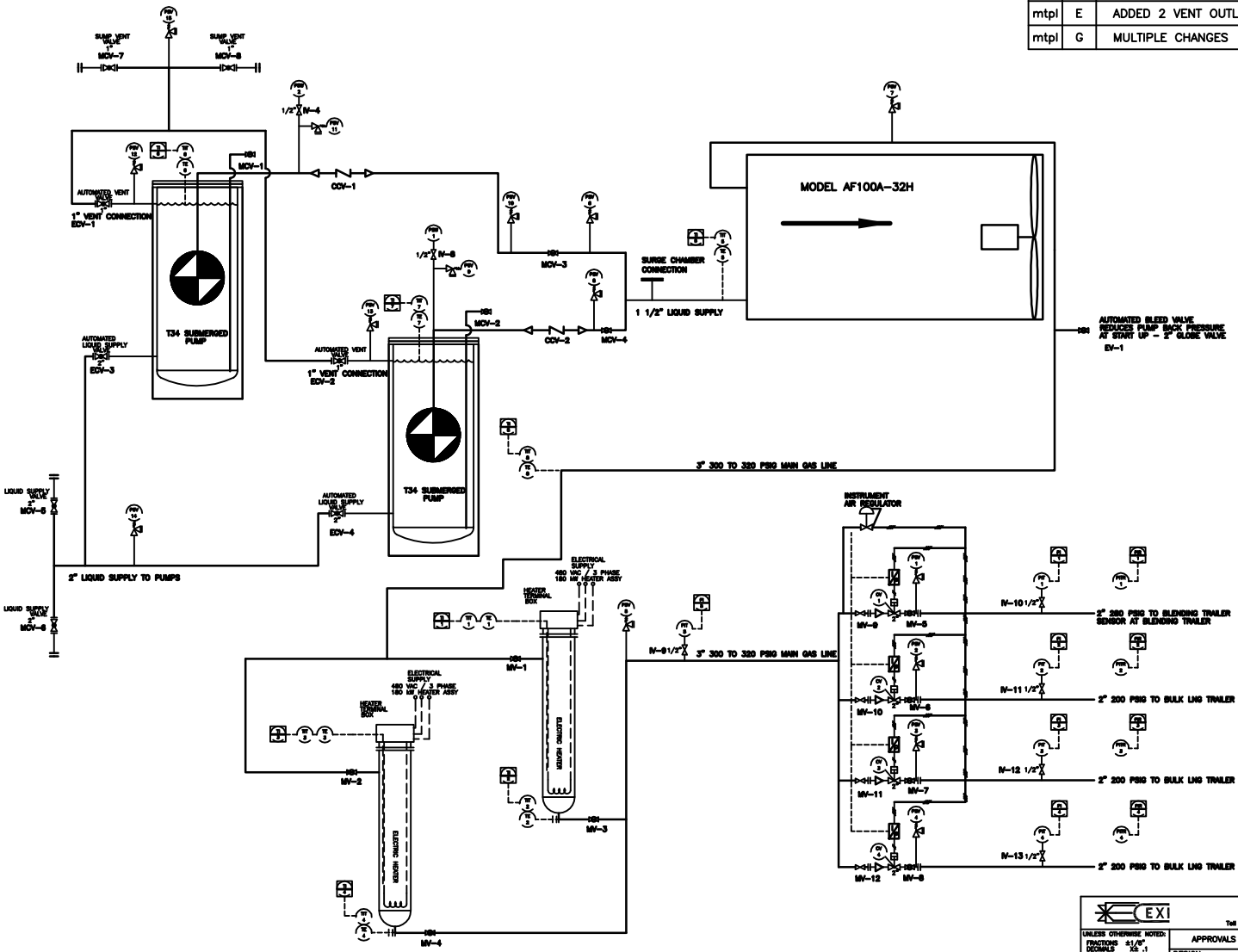

MCV = MANUAL CRYOGENIC VALVE
EDV = ELECTRIC CRYOGENIC VALVE
MV = MANUAL VALVE
CCV = CRYOGENIC CHECK VALVE
PT = PRESSURE TRANSMITTER
TIT = TEMPERATURE TRANSMITTER
CV = CONTROL VALVE
IV = INSTRUMENT ISOLATION VALVE
I/P = I TO P TRANSMITTER
TE = TEMPERATURE SENSING ELEMENT
TI = TEMPERTURE INDICATOR
PIT = PRESSURE TRANSMITTER - LOCAL
PSV = PRESSURE SAFETY VALVE
PSW = PRESSURE SWITCH
PITR = REMOTE PRESSURE TRANSMITTER
PIR = PRESSURE INDICATOR REMOTE TRANSMITTER
PI = PRESSURE INDICATOR LOCAL TRANSMITTER
XXXXX
XXXXX
XXXXX
XXXXX
XXXXX
XXXXX
XXXXX
XXXXX
XXXXX

CRYOGENIC EXPERTS
531 Sandy Circle, Oxnard, California 93036
Toll Free 1-800-FOR-CEX OR Phone (805) 981-4500 Fax. (805) 981-4501

UNLESS OTHERWISE NOTED:
FRACTIONS ±1/8"
DECIMALS .XX ±.1 .XXX ±.03 .XXXX ±.01
ANGLES ± 1°
BREAK ALL SHARP EDGES
DIMENSIONS ARE IN INCHES

APPROVALS	DATE
DESIGN: rjwjr	16nov10
CHECKED:	
MANUF:	
RELEASED:	

TITLE: LOW PRESSURE LN2 VAP SYSTEM
GasFrac CALGARY, CANADA
PID

MODEL

CMS JOB No. -
FILE -

SIZE B | FSCM NO. 55429 | DWG. NO. PID101107 | REV. G
SCALE NTS | JOB NUMBER | SHEET 1 OF 1