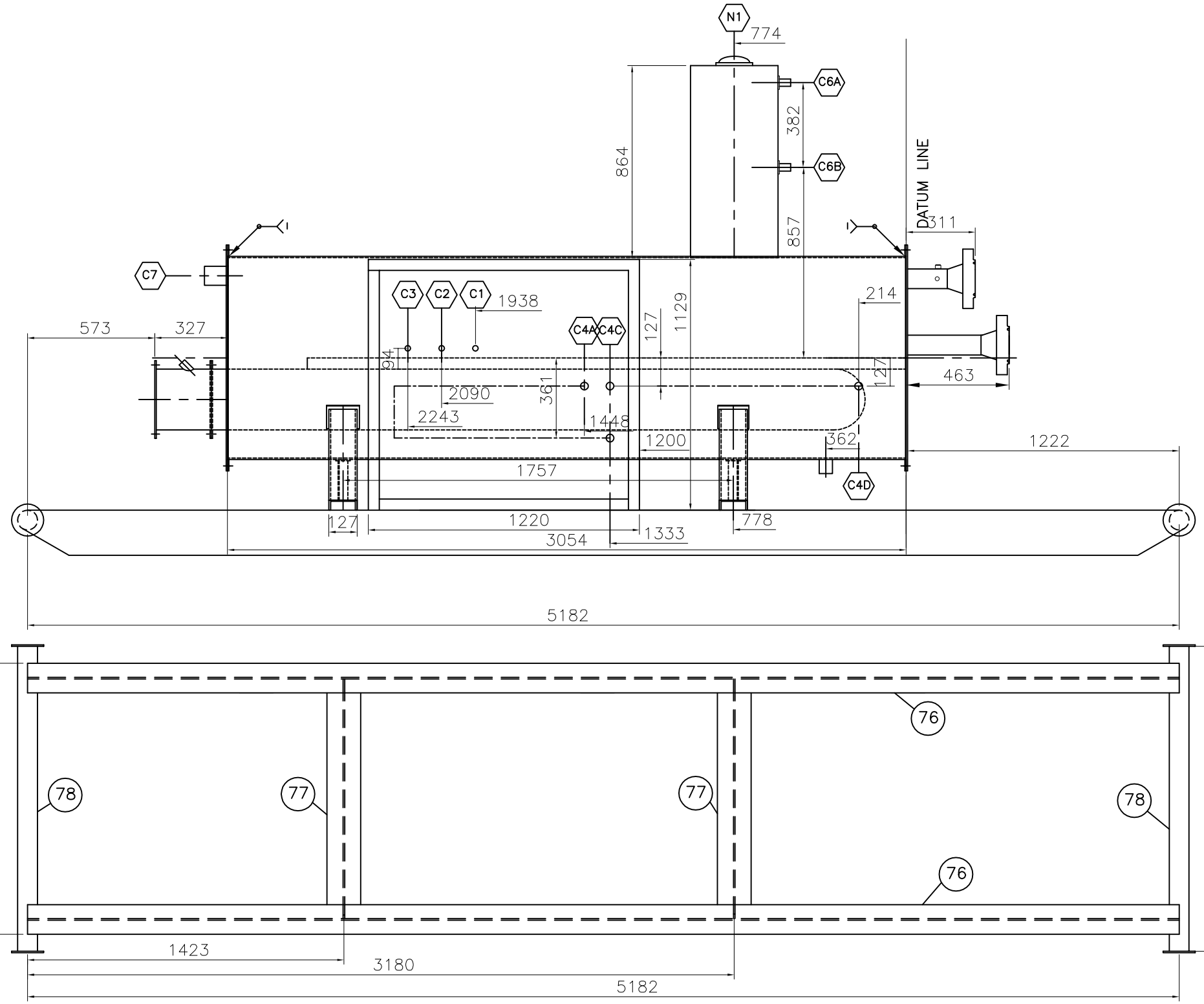

BILL OF MATERIALS

ITEM	QTY	DESCRIPTION	GRADE
76	2	8@18 WF BEAM X 17 ft LONG	G-40.21 44W
77	3	6@15 WF BEAM X 42 1/2" LONG	G-40.21 44W
78	2	PIPE 3" NPS X 54" LONG	A-106

REFERENCE DRAWINGS	
NUMBER	TITLE
ENC-LH-01-01	
ENC-LH-01-02	
ENC-LH-01-03	
ENC-LH-01-04	
ENC-LH-01-05	

REVISIONS					
NO.	BY	DATE	ISSUE	CHK'D	APP'D
0	AZ	07/02/19	ISSUED FOR CONSTRUCTION		

APPROVED		
DISCIPLINE	INITIALS	DATE
MECHANICAL		
CIVIL/STRUCTURAL		
ELECTRICAL		
DRAFTING/CHECKED		

Propipe Manufacturing
9625 - 144 Avenue
Grande Prairie, Ab
PH: (780) 402-3131
FAX: (780) 402-3130

Propipe Manufacturing

ENCANA

400,000 BTU LINE HEATER PACKAGE
GENERAL ASSEMBLY AND SKID DRAWING

SCALE	DRAWN	DATE	PROJECT NO.	JOB NO.	DRAWING NO.	REV.
NTS	AZ	07/02/19		ENC-MFG-02	ENC-LH-01-06	0

DRAWING NO.:

PLOT: 04/08/12 TIME: 14:54:18