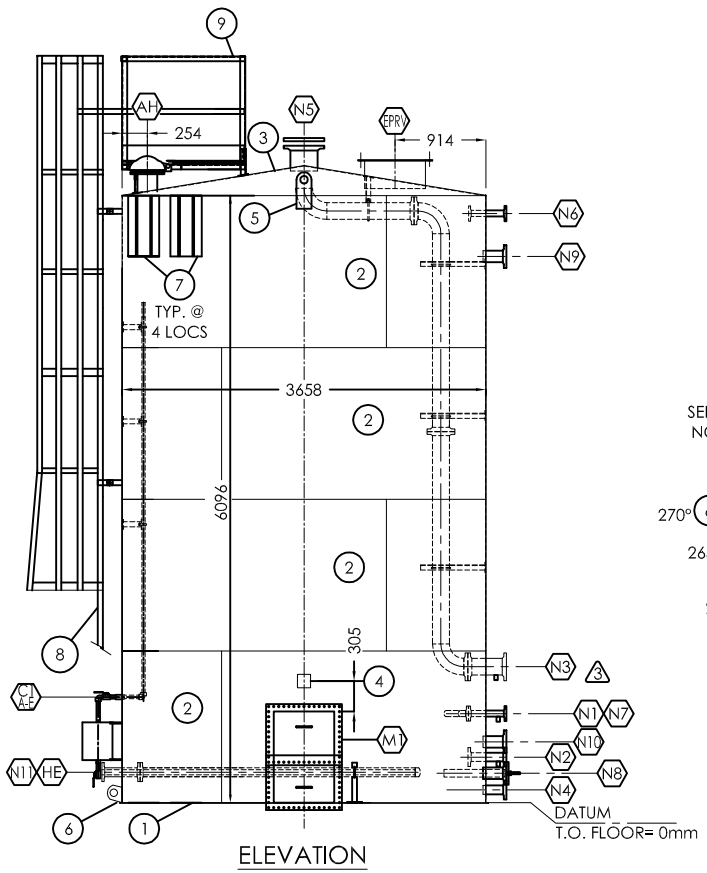

ELEVATION

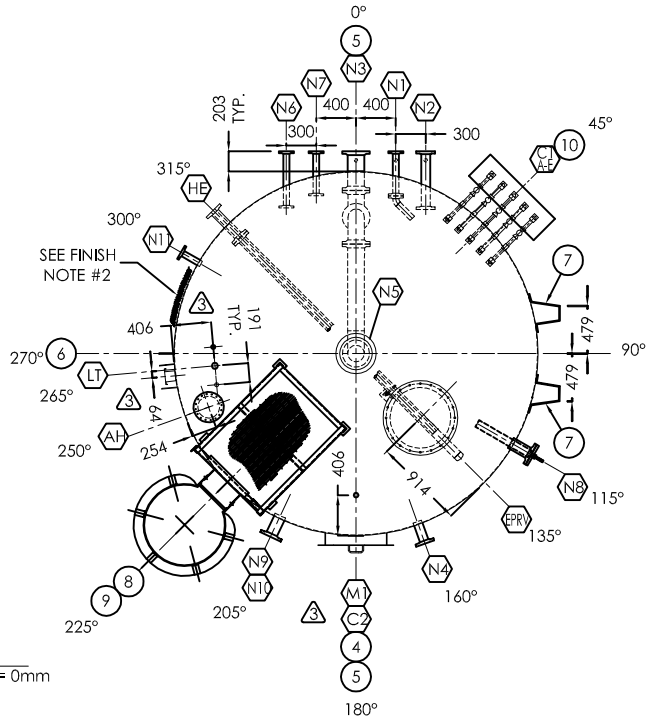

ORIENTATION

BILL OF MATERIALS

MARK	QTY	MAT'L	DESCRIPTION	SERVICE
1	1	A36	6.4 PL. x 3710 DIA. FLAT BOTTOM	
2	4	A36	4.8 PL. x 1524 x 11477 LG. SHELLS	
3	1	A36	4.8 PL. x 3740 DIA. CONED ROOF (2:12 SLOPE)	
4	1		NAMEPLATE & BRACKET	
5	2	A36	LARGE LIFT LUGS	
6	1	A36	TAIL LUG c/w REPAD	
7	4	A36	**INSULATION STAND OFFS**	
8	1	A36	CAGED LADDER c/w 1405 EXT. **(SEE SHT. B-16349-CL FOR DETAILS)**	
9	1	A36	ROOF PLATFORM **(SEE SHT. B-16349-RP FOR DETAILS)**	
10	1	A36	SAMPLE BOX **(SEE SHT. B-16349-SB FOR DETAILS)**	
M1	1	A36	610 x 914 (24" x 36") RECT. MANWAY	
	1	A36	762 x 1066 RECT. SPLIT MANWAY COVER	
			(MOUNT FLUSH WITH FLOOR)	
AH	1		219 DIA. (8") ENARDO 1000 SERIES LOCK DOWN HATCH	
	1	A36	219 DIA. (8") ARGO FABRICATED THIEF HATCH EXTENSION	
EPRV	1	A105	610 DIA (24") x 9.5 THK. API ROOF FLANGE	EPRV
	1	A106	610 DIA. (24") STD. SMLS PIPE x 275 LG.	
	1		610 DIA. (24") ENARDO 2524-111V-2-28/20.5	
LT	1	316SS	60 DIA. (2") 3000# NPT FULL COUPLING	LEVEL TRANS.
	2	316SS	42 DIA. (1 1/4") 3000# NPT FULL COUPLING	
	1		**REDTAIL MODEL GAUGE BOARD/ FLOAT SYSTEM** c/w GAUGE BOARD	
			BRACKET(ARGO TO INSTALL BRACKETS & ANCHORS ONLY. GAUGE	
			SYSTEM SUPPLIED & INSTALLED BY OTHERS)	
C1A-E	5	316SS	33 DIA. (1") 3000# NPT FULL COUPLING x 89 LG.	SAMPLE POINTS
C2	1	316SS	48 DIA. (1 1/2") 3000# NPT FULL COUPLING x 102 LG.	RADAR TRANS.
N1	2	A105	60 DIA. (2") 150# RFSO FLG.	INLET
	1	A106	60 DIA. (2") STD. SMLS PIPE x 418 LG.	
	1	316SS	27 DIA. (3/4") 3000# FULL CPLG w/ PLUG ON U/S OF NOZZLE	
			(SEE SHT. B-16349 D1 FOR PIPING DETAILS)	
N2	2	A105	89 DIA. (3") 150# RFSO FLG.	PUMP SUCTION
	1	A106	89 DIA. (3") STD. SMLS PIPE x 555 LG.	
	1	316SS	27 DIA. (3/4") 3000# FULL CPLG w/ PLUG ON U/S OF NOZZLE	
N3	2	316SS	168 DIA. (6") 150# RFSO FLG.	VAPOR OUT
	1	316SS	168 DIA. (6") SCH. 40 SMLS PIPE x 361 LG.	
	1	316SS	27 DIA. (3/4") 3000# FULL CPLG w/ PLUG ON U/S OF NOZZLE	
			(SEE SHT. B-16349 D1 FOR PIPING DETAILS)	
N4	1	A105	89 DIA. (3") 150# RFSO FLG.	DRAIN
	1	A106	89 DIA. (3") STD. SMLS PIPE x 218 LG.	
N5	1	A105	273 DIA. (10") 150# RFSO FLG.	VENT
	1	A106	273 DIA. (10") STD. SMLS PIPE x 240 LG.	
	1	A106	273 DIA. (10") 150# RF **BLIND** FLG.	**BLIND**
N6	2	A105	60 DIA. (2") 150# RFSO FLG.	BLANKET GAS
	1	A106	60 DIA. (2") STD. SMLS PIPE x 540 LG.	
N7	2	A105	60 DIA. (2") 150# RFSO FLG.	TRUCK OUT
	1	A106	60 DIA. (2") STD. SMLS PIPE x 418 LG.	
N8	1	A105	114 DIA. (4") 150# RFSO FLG.	ANODE
	1	A106	114 DIA. (4") STD. SMLS PIPE x 220 LG.	
			(SEE SHT. B-16349 D1 FOR PIPING DETAILS)	
N9	1	A105	114 DIA. (4") 150# RFSO FLG.	HLSD
	1	A106	114 DIA. (4") STD. SMLS PIPE x 219 LG.	
N10	1	A105	114 DIA. (4") 150# RFSO FLG.	LLSD
	1	A106	114 DIA. (4") STD. SMLS PIPE x 219 LG.	
N11	1	A105	60 DIA. (2") 150# RFSO FLG.	TIT
	1	A106	60 DIA. (2") STD. SMLS PIPE x 218 LG.	
HE	2	316SS	89 DIA. (3") 150# RFSO FLG.	ELECTRIC HEATER 1
	1	316SS	89 DIA. (3") STD. SMLS PIPE x 355 LG.	
			(SEE SHT. B-16349 D2 FOR PIPING DETAILS)	

NOZZLES

MARK	PROJECTIONS EXT.	PROJECTIONS INT.	ELEV.	ORIE.	NOTES
C1A-E	64mm	--	1061mm	45°	SAMPLE POINTS
C2	76mm	--	ROOF	180°	RADAR TRANS.
LT	76mm	--	ROOF	265°	LEVEL TRANS.
N1	247mm	152mm	894mm	--	INLET
N2	342mm	152mm	457mm	--	PUMP SUCTION
N3	203mm	152mm	**1365mm**	0°	VAPOR OUT 3
N4	203mm	25mm	127mm	160°	DRAIN
N5	203mm	25mm	ROOF	--	VENT
N6	342mm	152mm	5918mm	--	BLANKET GAS
N7	247mm	152mm	894mm	--	TRUCK OUT
N8	203mm	25mm	294mm	115°	ANODE
N9	203mm	25mm	5486mm	205°	HLSD
N10	203mm	25mm	610mm	205°	LLSD
N11	203mm	25mm	305mm	300°	TIT
HE	203mm	25mm	305mm	315°	ELECTRIC HEATER
EPRV	203mm	25mm	ROOF	135°	EPRV

DESIGN NOTES

1. TANK TO BE BUILT AND TESTED TO API-12F SPEC. MODIFIED (NON-LABELED)
2. TANK TO BE AIR/SOAP LEAK TESTED TO **12 OZ. / SQ. IN.** 3
3. ROOF/SHELL JOINTS NOT TO BE BACKWELDED
4. ESTIMATED SHIPPING WEIGHT = 4990 KG. (11000#)
5. REFER TO ORIENTATION DRAWING FOR PROPER LOCATION OF ALL NOZZLES, COUPLINGS, ETC.
6. ALL DIMENSIONS ARE IN mm.
7. **CAGE LADDER/ ROOF PLATFORM AND SAMPLE BOX TO BE SHIPPED LOOSE.**
8. **ALUMINUM ANODE TO BE SHIPPED LOOSE.**
9. **HEAT NUMBERS AND MTR'S TO BE RECORDED.**
10. BOLT HOLES TO STRADDLE PRIMARY CENTER LINES.
11. **IMMERSION HEATER TO BE SHIPPED LOOSE.**

INTERNAL & EXTERNAL FINISH

1. INTERNAL FINISH

BLAST: SSPC-SP5 WHITE METAL BLAST USING SIL 7 SAND
COATING: 20.0 - 40.0 MILS DFT OF ENVIROLINE EC-376 EPOXY COATING

2. EXTERNAL FINISH

BLAST: SSPC-SP6 COMMERCIAL BLAST USING SIL 7 SAND
PRIMER: 1.5 - 2.0 MILS DFT OF CLOVERDALE TOWER OR RUSTEX #71024 GRAY
INSULATION: 2" MINERAL WOOL INSULATION & 0.20" SMOOTH CORRUGATED ALUMINUM CLADDING c/w ¾" STAINLESS STEEL BANDING. **COLOR: STONE GRAY**
PAINT: ALL PROJECTIONS, 1.5 - 2.0 MILS DFT OF CLOVERDALE MARINE ENAMEL- **COLOR STONE GRAY**

3. BOTTOM FINISH

BLAST: SSPC-SP6 COMMERCIAL BLAST
COATING: 15 - 20 MILS DFT OF COAL TAR EPOXY

REVISIONS

NO.	DESCRIPTION	BY	DATE
3	ISSUED FOR FABRICATION	RR	07.25.05
2	ISSUED FOR PART AND ORDERING	RR	07.12.05
1	ISSUED FOR APPROVAL	RR	06.13.05
0	ISSUED FOR REVIEW/ MARKUP	RR	06.06.05

CUSTOMER: FORT ENERGY CORPORATION c/o BDR ENGINEERING LTD.
RPO# 43874 -29 Rev. 0
CLEARWATER GAS PLANT L.S.D. 11-17-63-06-W5M

TITLE: ONE (1) 64 CU. M. (400 BBL)
3658 x 6096 HIGH
NON-SKIDDED SKIM TANK

ARGO SALES LTD

APPROVED BY:		**CHECKED BY:**		**DRAWN BY:**	RR
DATE:	05.31.05	**TAG #:**	T-702	**DRAWING#:**	B-16349
SHEET:	1 OF 6	**SCALE:**	NTS	**SERIAL#:**	**16349**

REV. 3

QUOTE #: TQ05-234D_R1

TITLE: 400 BBL NON-SKIDDED STORAGE TANK

CUSTOMER: FORT ENERGY CORPORATION c/o BDR ENGINEERING LTD.

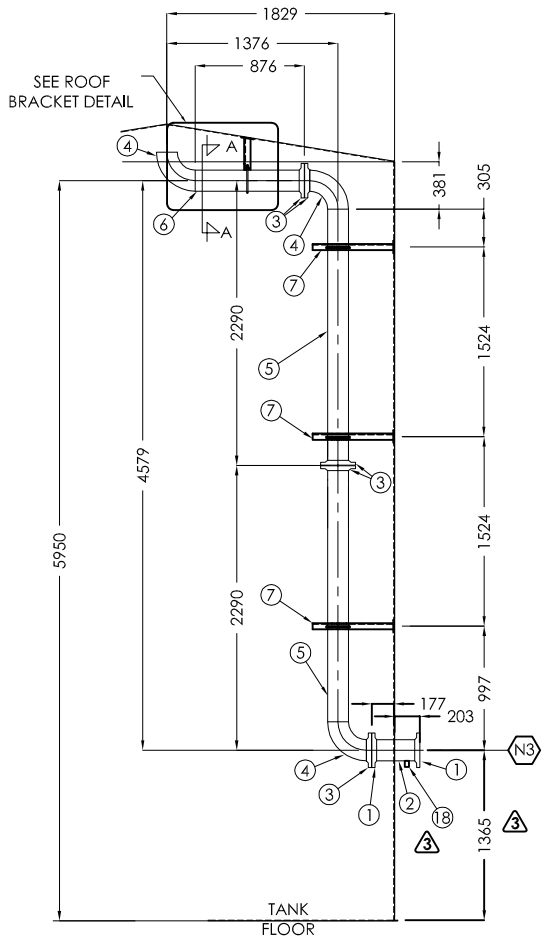

N3- VAPOR OUT DETAIL

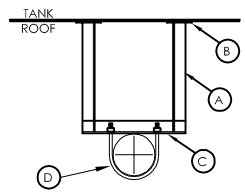

SECTION A-A:
ROOF BRACKET DETAIL

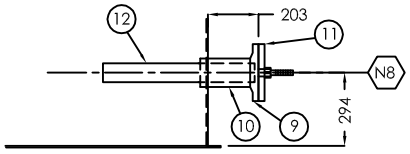

N8 - ANODE

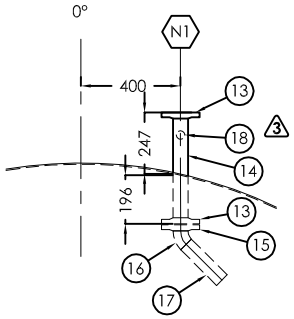

N1 - INLET DETAIL

BILL OF MATERIALS

MARK	QTY	MAT'L	DESCRIPTION	SERVICE
			N3 - VAPOR OUT	
1	2	316SS	168 DIA. (6") 150# RFSO FLG.	
2	1	316SS	168 DIA. (6") SCH. 40S ERW SMLS PIPE x 361 LG.	
3	5	316SS	168 DIA. (6") 150# RFSO FLG.	
4	3	316SS	168 DIA. (6") 10S 90° LRWE	
5	2	316SS	168 DIA. (6") SCH. 10S ERW SMLS PIPE x **2044 LG.**	
6	1	316SS	168 DIA. (6") SCH. 10S ERW SMLS PIPE x 861 LG.	
7	3	316SS	50 x 50 x 6 ANGLE x TO BE SHOP DETERMINED	
	3	316SS	6 THK. x 100 SQ. BASE PLATE	
	3	316SS	168 DIA (6") U-BOLT c/w NUTS	
8		316SS	ROO SUPPORT BRACKET **(SEE DETAIL THIS SHT.)**	
			ROOF SUPPORT BRACKET	
A	1	316SS	50 x 50 x 6 ANGLE x TO BE SHOP DETERMINED	
B	1	316SS	6 THK. x 100 SQ. BASE PLATE	
C	1	316SS	50 x 50 x 6 ANGLE x TO BE SHOP DETERMINED	
D	1	316SS	168 DIA (6") U-BOLT c/w NUTS	
			N8 - ANODE	
9	1	A105	114 DIA. (4") 150# RFSO FLANGE	
10	1	A106	114 DIA. (4") STD. SMLS x 220 LG.	
11	1	A105	114 DIA. (4") 150# BLIND FLANGE	
12	1		76 x 610 ALUM. ANODE MOUNTED ON 114 DIA. (4") BLIND FLG. c/w 114 DIA. FLG INSULATION KIT	
			N1 - INLET	
13	2	A105	60 DIA. (2") 150# RFSO FLANGE	
14	1	A106	60 DIA. (2") STD. SMLS x 418 LG.	
15	1	316SS	60 DIA. (2") 150# RFSO FLANGE	
16	1	316SS	60 DIA. (2") 10S 45° ELL.	
17	1	316SS	60 DIA. (2") STD. SMLS x 203 LG.	
			DRAIN POINTS ON N1 AND N3	
18	2	316SS	27 DIA. (3/4") 3000# FULL CPLG w/ PLUG ON U/S OF NOZZLE	

NOZZLES

MARK	PROJ. EXT.	PROJ. INT.	ELEV.	ORIE.	NOTES
N1	247mm	152mm	894mm	–	INLET
N3	203mm	152mm	1365mm	0°	VAPOR OUT
N8	203mm	25mm	294mm	115°	ANODE

DESIGN NOTES

1. ALL DIMENSIONS ARE IN mm.

INTERNAL & EXTERNAL FINISH

REVISIONS

NO.	DESCRIPTION	BY	DATE
3	ISSUED FOR FABRICATION	RR	07.25.05
2	ISSUED FOR PARTS AND ORDERING	RR	07.12.05
1	ISSUED FOR APPROVAL	RR	06.13.05
0	ISSUED FOR REVIEW/ APPROVAL	RR	06.06.05

CUSTOMER: FORT ENERGY CORPORATION c/o BDR ENGINEERING LTD.
R.P.O# 43874-29 REV. 0
LOCATION: LSD 11-17-63-06-W5M (CLEAR WATER GAS PLANT)

TITLE:

NOZZLE DETAILS

ARGO SALES LTD

APPROVED BY:		CHECKED BY:		DRAWN BY:	RR
DATE:	05/27/05	TAG #:	T-702	DRAWING#:	B-16349_D1
SHEET:	2 OF 6	SCALE:	NTS	SERIAL#:	16349

REV. 3

QUOTE #: TQ05-234D_R1

TITLE: NOZZLE DETAILS

CUSTOMER: FORT ENERGY c/o BDR ENGINEERING

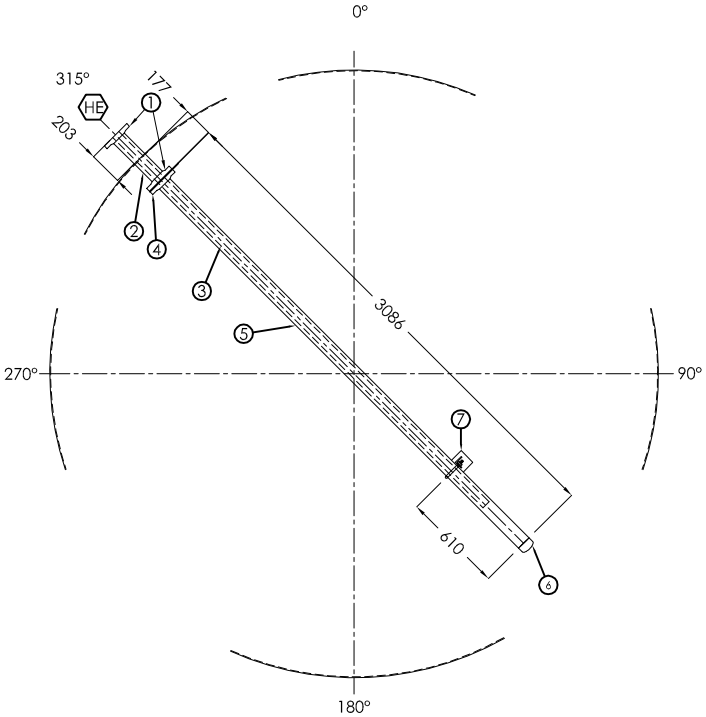

IMMERSION HEATER WELL ORIENTATION

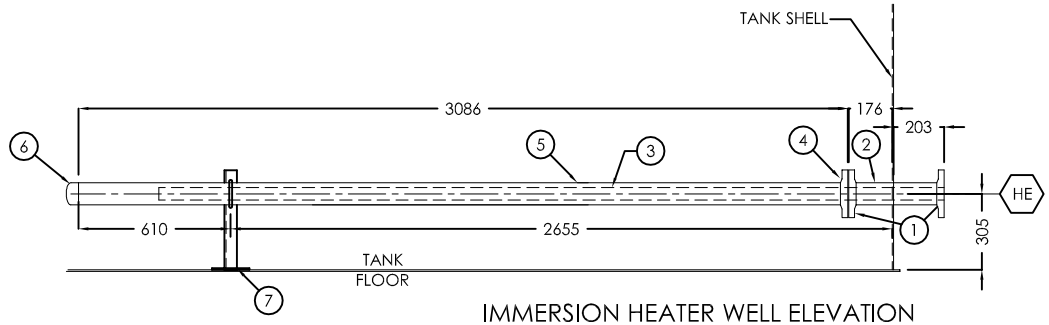

IMMERSION HEATER WELL ELEVATION

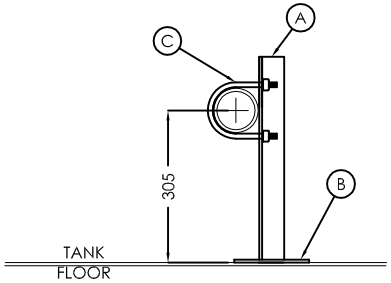

SUPPORT BRACKET DETAIL

BILL OF MATERIALS

MARK	QTY	MAT'L	DESCRIPTION	SERVICE
			HE- IMMERSION HEATER WELL	
1	2	316SS	89 DIA. (3") 150# RF50 FLANGE	
2	1	316SS	89 DIA. (3") STD. SMLS x 355 LG.	
3	1		3150 LG. (124") PIPE-INSERT **(SEE DESIGN NOTE #2)**	
4	1	316SS	89 DIA. (3") 150# RF50 FLANGE	
5	1	316SS	89 DIA. (3") STD. SMLS x 3071 LG.	
6	1	316SS	89 DIA. (3") STD. SCH. 40 WELD CAP	
7	1		SUPPORT BRACKET (SEE DETAIL THIS SHT.)	
			HEATER WELL SUPPORT BRACKET	
A	1	316SS	6.4 x 51 x 51 ANGLE x LG. TO BE SHOP DETERMINED.	
B	1	316SS	6.4 x 100 x 100 BASEPLATE	
C	1	316SS	89 DIA. (3") U-BOLT c/w NUTS	

NOZZLES

MARK	PROJECTIONS EXT.	PROJECTIONS INT.	ELEV.	ORIE.	NOTES
HE	203mm	152mm	305mm	315°	ELEC. HEATER

DESIGN NOTES

1. ALL DIMENSIONS ARE IN mm.
2. PIPE INSERT IMMERSION HEATER :
   - **MODEL # MXI306F3124TX 480V 3 Φ 6KW**
   - -3" 150 # FLANGE
   - -124" INSERT LENGTH
   - -EXPLOSION PROOF TERMINAL BOX
   - -300°F TO 700°F PILOT DUTY CYCLING HIGH LIMIT
   - -3" HEATER WELL (316SS SCH. 40) c/w FLOOR SUPPORTS

INTERNAL & EXTERNAL FINISH

REVISIONS

NO.	DESCRIPTION	BY	DATE
3	ISSUED FOR FABRICATION	RR	07.25.05
2	ISSUED FOR PARTS AND ORDERING	RR	07.12.05
1	ISSUED FOR APPROVAL	RR	06.13.05
0	ISSUED FOR REVIEW/ APPROVAL	RR	06.06.05

CUSTOMER: FORT ENERGY CORPORATION c/o BDR ENGINEERING LTD.
R.P.O# 43874-29 REV. 0
LOCATION: LSD 11-17-63-06-W5M (CLEARWATER GAS PLANT)

TITLE:

ELECTRIC HEATERS DETAILS

ARGO SALES LTD

APPROVED BY:		CHECKED BY:		DRAWN BY:	RR		
DATE:	05/31/05	TAG #:	T-702	DRAWING#:	B-16349_D2	REV.	3
SHEET:	3 OF 6	SCALE:	NTS	SERIAL#:	16349		

FORT ENERGY c/o BDR ENGINEERING

CUSTOMER:

NOZZLE DETAILS

TITLE:

QUOTE #: TQ05-234D_R1

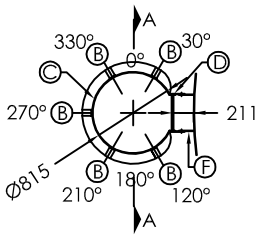

ORIENTATION

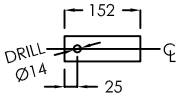

DETAIL #1

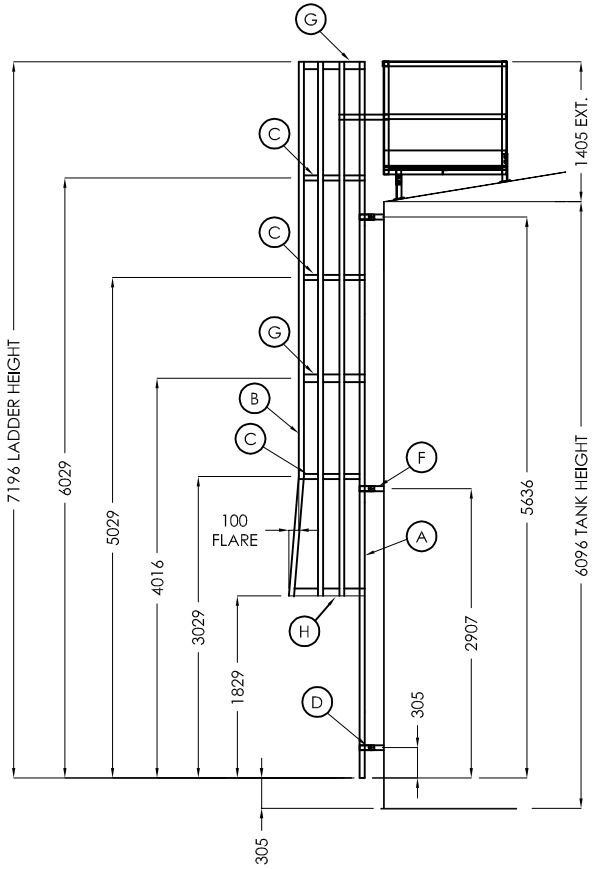

ELEVATION

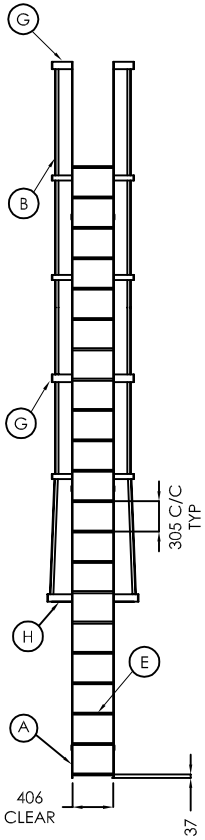

SECTION A-A

BILL OF MATERIALS

MARK	QTY	MAT'L	DESCRIPTION	SERVICE
A	2	A36	6.4 THK x 50 FLAT BAR x 7196 LG.	
B	5	A36	6.4 THK x 45 FLAT BAR x 5367 LG.	
C	3	A36	6.4 THK x 50 FLAT BAR x 2143 LG. ROUND TO 815 Ø	
D	6	A36	6.4 THK x 50 FLAT BAR x 153 LG. (SEE DETAIL #1) WELD TO LADDER	
E	21	A36	19Ø (3/4") ROUND BAR x **419 LG.** (LADDER RUNGS)	
F	6	A36	6.4 THK x 50 FLAT BAR x 153 LG. (SEE DETAIL #1) WELD TO TANK SHELL	
G	2	A36	6.4 THK x 76 FLAT BAR x 2143 LG. ROUND TO 815 Ø	
H	1	A36	6.4 THK x 76 FLAT BAR x 2676 LG. ROUND TO 1018 Ø	

NOZZLES

MARK	PROJ.	ELEV.	NOTES

DESIGN NOTES

1. ALL DIMENSIONS ARE IN mm.
2. **CAGED LADDER TO BE SHIPPED LOOSE.**

INTERNAL & EXTERNAL FINISH

CAGED LADDER FINISH

BLAST: SSPC-SP6 COMMERCIAL BLAST
PRIMER: 1.5 - 2.0 MILS DFT CLOVERDALE TOWER OR RUSTEX #71024 GRAY
PAINT: 1.5 - 2.0 MILS DFT CLOVERDALE MARINE ENAMEL. **COLOR- STONE GRAY**

REVISIONS

NO.	DESCRIPTION	BY	DATE
1	ISSUED FOR FABRICATION	RR	07.12.05
0	ISSUED FOR REVIEW/APPROVAL	RR	06.06.05

CUSTOMER: FORT ENERGY CORPORATION c/o BDR ENGINEERING LTD.
RPO# 43874 -29 Rev. 0
CLEARWATER GAS PLANT L.S.D. 11-17-63-06-W5M

TITLE: CAGE LADDER DETAILS

ARGO SALES LTD

APPROVED BY:		**CHECKED BY:**		**DRAWN BY:**	RR	**REV.**	1
DATE:	05.31.05	**TAG #:**	T-702	**DRAWING#:**	B-16349-CL		
SHEET:	4 **OF** 6	**SCALE:**	NTS	**SERIAL#:**	**16349**		

QUOTE #: TQ05-234D_R1

CUSTOMER: FORT ENERGY CORPORATION c/o BDR ENGINEERING LTD.

TITLE: CAGE LADDER DETAILS

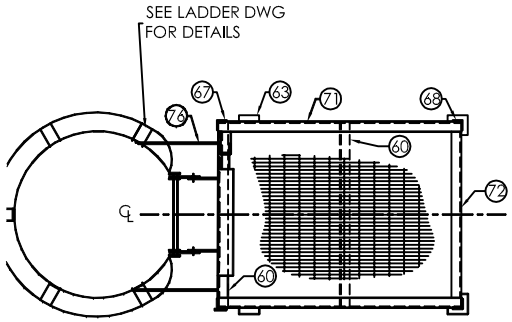

TOP VIEW

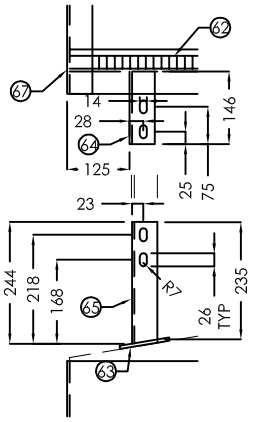

DETAIL #1

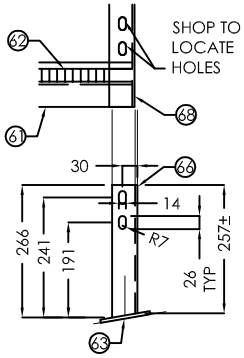

DETAIL #2

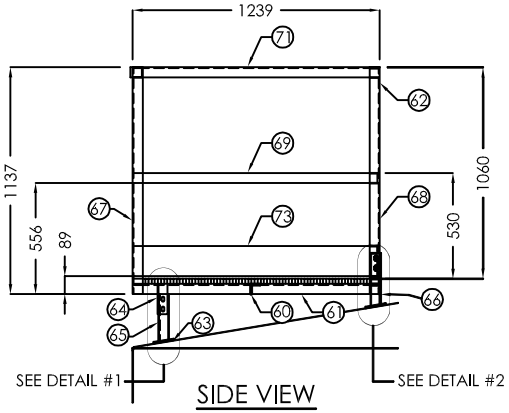

SIDE VIEW

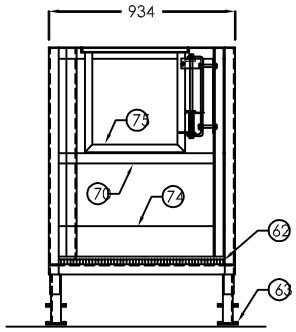

END VIEW

SAFETY CAGE/PLATFORM ELEVATION

BILL OF MATERIALS

MARK	QTY	MAT'L	DESCRIPTION	SERVICE
60	3	A36	51 x 51 x 6.4 ANGLE 922 LG. (COPE TO FIT)	
61	2	A36	51 x 51 x 6.4 ANGLE IRON 1227 LG.	
62	1	A36	25 x 4.8 BAR GRATING 12 sq. ft. **(SERRATED)**	
63	4	A36	102 x 102 REPAD W/ 6mm WEEP HOLE 6.4 THK.	SUPPORT BASE
64	2	A36	51 x 51 x 6.4 ANGLE IRON 146 LG.	FRONT LEG
65	2	A36	51 x 51 x 6.4 ANGLE IRON 244 LG.	FRONT SUPPORT
66	2	A36	51 x 51 x 6.4 ANGLE IRON 266 LG.	REAR SUPPORT
67	2	A36	51 x 51 x 6.4 ANGLE IRON 1137 LG.	FRONT POST
68	2	A36	51 x 51 x 6.4 ANGLE IRON 1137 LG.	REAR POST
69	2	A36	51 x 6.4 FLAT BAR 1227 LG.	MID RAIL
70	1	A36	51 x 6.4 FLAT BAR 910 LG.	REAR MID RAIL
71	2	A36	51 x 51 x 6.4 ANGLE IRON 1227 LG.	TOP RAIL
72	1	A36	51 x 51 x 6.4 ANGLE IRON 914 LG.	REAR TOP RAIL
73	2	A36	152 x 6.4 FLAT BAR x 1227 LG.	SIDE TOE RAIL
74	1	A36	152 x 6.4 FLAT BAR 910 LG.	REAR TOE RAIL
75	1		SAFETY GATE	SAFETY GATE
76	2	A36	6.4 THK x 51 FLAT BAR CAGE BRACE (SHOP TO FIT C/W BOLT CONNECTION)	

NOZZLES

MARK	PROJ.	ELEV.	NOTES

DESIGN NOTES

1. ALL DIMENSIONS ARE IN mm.

INTERNAL & EXTERNAL FINISH

1. PLATFORM FINISH

BLAST: SSPC-SP6 COMMERCIAL BLAST USING SIL 7 SAND
PRIME: 1.5 - 2.0 mils DFT CLOVERDALE TOWER OR RUSTEX #71029
PAINT: 1.5 - 2.0 mils DFT CLOVERDALE MARINE ENAMEL, **COLOR-STONE GRAY**

REVISIONS

NO.	DESCRIPTION	BY	DATE
1	ISSUED FOR FABRICATION	RR	07.12.05
0	ISSUED FOR REVIEW/ APPROVAL	RR	06.06.05

CUSTOMER: FORT ENERGY CORPORATION c/o BDR ENGINEERING LTD.
R.P.O# 43874-29 REV. 0
LOCATION: LSD 11-17-63-06-W5M (CLEAR WATER GAS PLANT)

TITLE:

ROOF PLATFORM DETAIL

ARGO SALES LTD

APPROVED BY:		**CHECKED BY:**		**DRAWN BY:**	RR
DATE:	05/27/05	**TAG #:**	T-702	**DRAWING #:**	B-16349_RP
SHEET:	5 **OF** 6	**SCALE:**	NTS	**SERIAL #:**	**16349**

REV. 1

CUSTOMER: FORT ENERGY c/o BDR ENGINEERING

TITLE: ROOF PLATFORM DETAIL

QUOTE #: TQ05-234D_R1

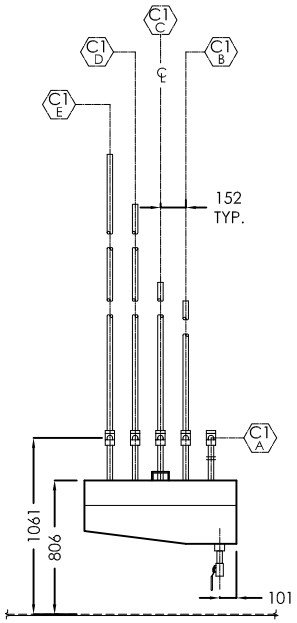

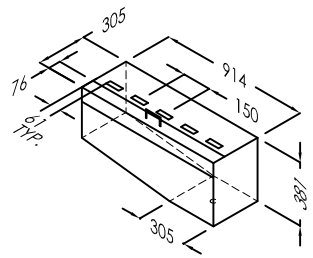

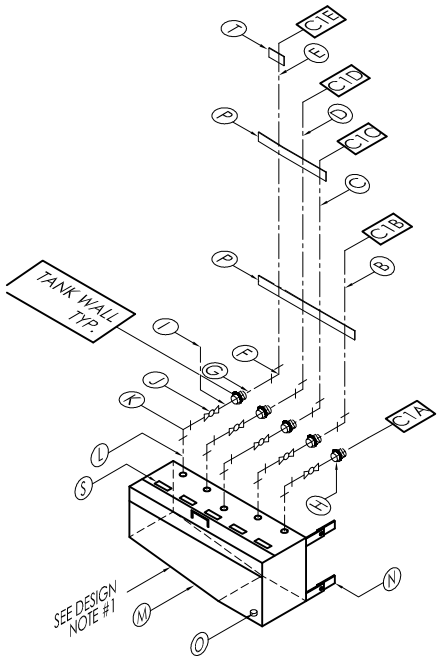

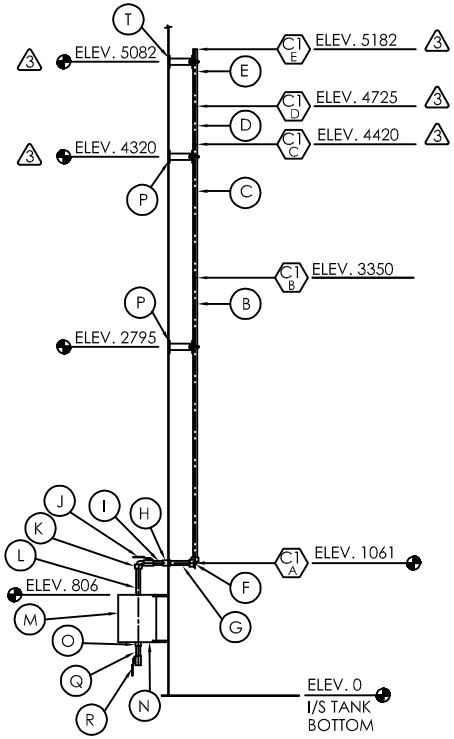

BILL OF MATERIALS

MARK	QTY	MAT'L	DESCRIPTION	SERVICE
A			NOT REQUIRED	
B	1	316SS	33 DIA. (1") THR'D PIPE x 2258 LONG	
C	1	316SS	33 DIA. (1") THR'D PIPE x **3331 LONG**	
D	1	316SS	33 DIA. (1") THR'D PIPE x **3636 LONG**	
E	1	316SS	33 DIA. (1") THR'D PIPE x **4093 LONG**	
F	4	316SS	33 DIA. (1") 150# 90° THR'D ELBOW	
G	4	316SS	33 DIA. (1") THR'D PIPE x 185 LONG	
H	5	316SS	33 DIA. (1") 3000# FULL CPLG. x 89 LG.	
I	6	316SS	33 DIA. (1") SCH. 80S THR'D NIPPLE x 76 LONG	
J	6		33 DIA. (1") NAVCO-NUTRON ECONOMY BAR STOCK	
			2000# THR'D BALL VALVE, NACE SPEC. c/w 316SS TRIM	
K	5	A105	33 DIA. (1") 3000# 90° STREET ELBOW	
L	5	A106	33 DIA. (1") THR'D NIPPLE x 256 LONG	
M	1	A36	SAMPLE BOX (RIGHT HAND) - SEE DETAILS THIS SHEET-	
N	3	A36	SAMPLE BOX CLIP c/w BOLT	
O	1	A105	60 DIA. (2") COUPLING	
P	4	A36	6.4 THK. x 100 x 100 LONG FLAT BAR	TAB BASEPLATE
	4	316SS	6.4 THK. x 50 FLAT BAR (LENGTH TO BE SHOP DETERMINED)	TABS
	2	316SS	6.4 THK. x 50 FLAT BAR (LENGTH TO BE SHOP DETERMINED)	PIPE SUPPORTS
	7	304SS	U-BOLTS c/w NUTS	
Q	1	A106	60 DIA. (2") THR'D NIPPLE x 76 LONG	
R	1		60 DIA. (2") NAVCO-NUTRON ECONOMY BAR STOCK	
			2000# THR'D BALL VALVEW NACE SPEC. c/w 316SS TRIM	
S	5	316SS	4.8 THK. x 25 x 76 LG. ELEVATION TAGS (MAX. ELEVATION OF INTERNAL PIPING TO BE STAMPED ON TAGS)	
T	1	A36	6.4 THK. x 100 x 100 LONG FLAT BAR	
	1	316SS	6.4 THK. x 50 x 50 ANGLE (LENGTH TO BE SHOP DETERMINED)	
	1	304SS	U-BOLT c/w NUT	

NOZZLES

MARK	PROJ.	ELEV.	NOTES
C1A	N/A	1061mm	
C1B	N/A	1061mm	
C1C	N/A	1061mm	
C1D	N/A	1061mm	
C1E	N/A	1061mm	

DESIGN NOTES

1. ALL DIMENSIONS ARE IN mm.
2. ALL ELEVATIONS TAKEN FROM TOP OF TANK FLOOR.
3. SAMPLE BOX TO BE REMOVEABLE.

INTERNAL & EXTERNAL FINISH

SAMPLE BOX FINISH

BLAST: SSPC-SP6 COMMERCIAL BLAST USING SIL7 SAND
PRIMER: 1.5 - 2.0 MILS DFT CLOVERDALE TOWER OR RUSTEX #71024 GRAY
PAINT: 1.5 - 2.0 MILS DFT CLOVERDALE MARINE ENAMEL. **COLOR- STONE GRAY**

REVISIONS

NO.	DESCRIPTION	BY	DATE
3	REVISED SAMPLE LINES ELEVATIONS	RR	08.08.05
2	ISSUED FOR FABRICATION	RR	07.25.05
1	ISSUED FOR PARTS AND ORDERING	RR	07.12.05
0	ISSUED FOR REVIEW/MARKUP	RR	06.06.05

CUSTOMER: FORT ENERGY CORPORATION c/o BDR ENGINEERING LTD.
R.P.O# 43874-29 REV. 0
LOCATION: LSD 11-17-63-06-W5M (CLEAR WATER GAS PLANT)

TITLE: - SAMPLE BOX AND PIPING DETAILS - (RIGHT HAND)

ARGO SALES LTD

APPROVED BY:		**CHECKED BY:**		**DRAWN BY:**	RR
DATE:	05/31/05	**TAG #:**	T-702	**DRAWING #:**	B16349_SB
SHEET:	6 OF 6	**SCALE:**	NTS	**SERIAL #:**	**16349**

REV. 3

QUOTE #: TQ05-234D_R1

CUSTOMER: FORT ENERGY c/o BDR ENGINEERING

TITLE: - SAMPLE BOX AND PIPING DETAILS (RIGHT HAND) -

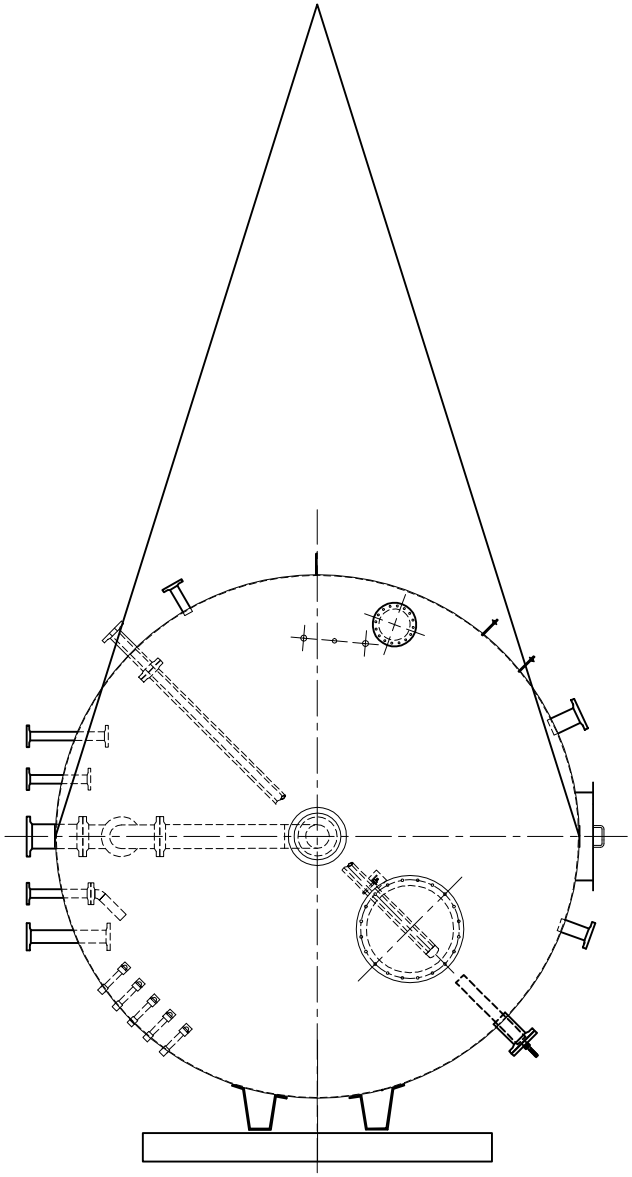

REVISIONS			
0			
NO.	DESCRIPTION	BY	DATE

TITLE: LIFT LUG LAYOUT

ARGO SALES LTD

APPROVED BY:		CHECKED BY:	DRAWN BY: RR
DATE: 05/27/05		TAG #: -	DRAWING #: B-16349
SHEET: OF		SCALE: NTS	SERIAL #: 16349

REV. 0

CUSTOMER: FORT ENERGY c/o BDR ENGINEERING

TITLE: LIFT LUG LAYOUT

QUOTE #: TQ05-234D_R1