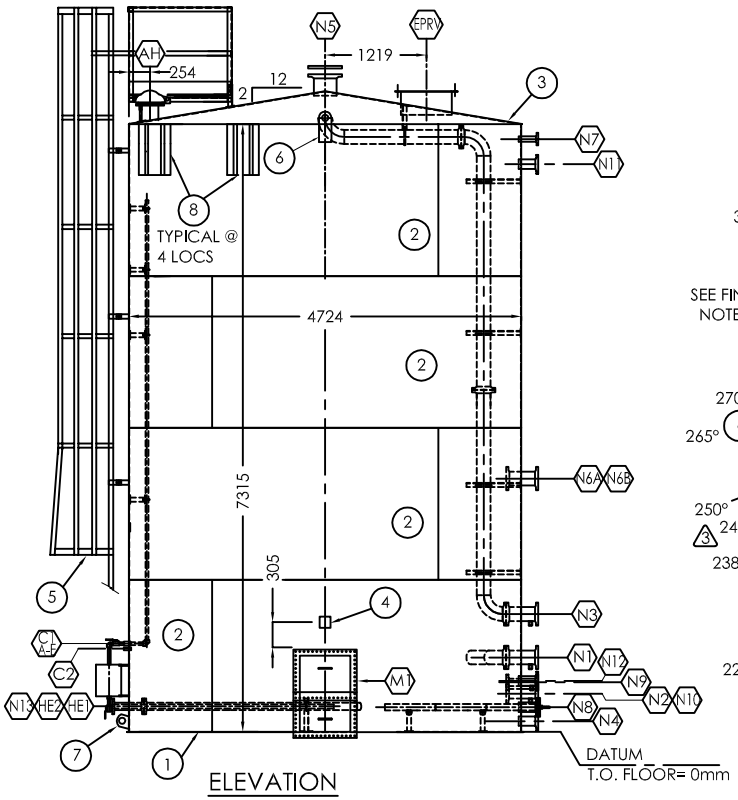

ELEVATION

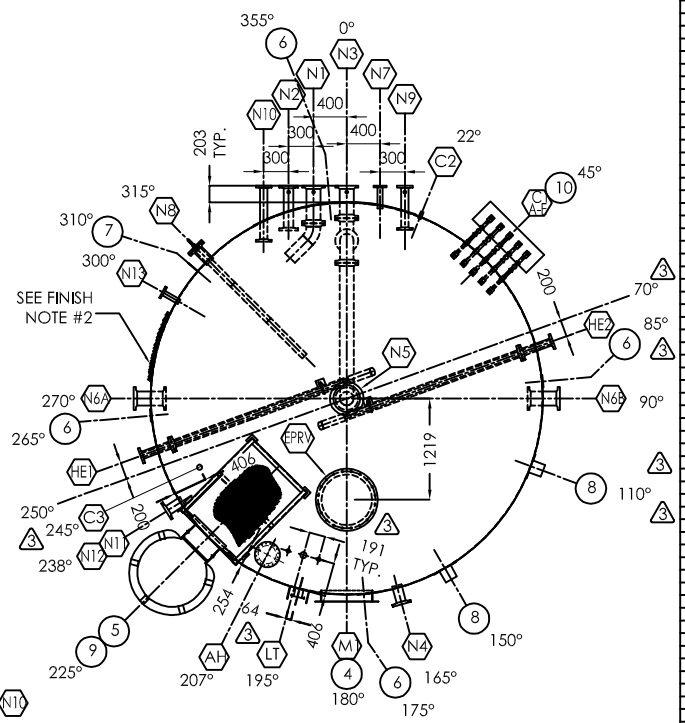

ORIENTATION

BILL OF MATERIALS

MARK	QTY	MAT'L	DESCRIPTION	SERVICE
1	1	A36	6.4 PL. x 4826 Ø (FLAT BOTTOM)	
2	4	A36	4.8 PL. x 1829 x 14826 LG. (SHELLS)	
3	1	A36	6.4 PL. x 4830 Ø (ROOF 2: 12 SLOPE)	
4	1		NAMEPLATE AND BRACKET	
5	1	A36	CAGED LADDER C/W 1405 EXTENSION **(SEE SHT. B-7370 CL FOR DETAILS)**	
6	4	A36	LARGE LIFT LUGS	
7	1	A36	TAIL LUG C/W REPAD	
8	4	A36	HAULING PADS	
9	1	A36	ROOF PLATFORM **(SEE SHT. B-7370 RP FOR DETAILS)**	
10	1	A36	SAMPLE BOX - RIGHT HAND **(SEE SHT. B-7370 SB FOR DETAILS)**	
M1	1	A36	610x914 (24"x36") RECT. MANWAY	
	1	A36	762x1066 RECTANGULAR SPLIT MANWAY COVER w/ HANDLES	
			(MOUNTED FLUSH WITH FLOOR)	
AH	1		219 DIA. (8") ENARDO 1000 SERIES LOCK DOWN HATCH	
	1	A36	219 DIA. (8") ARGO FABRICATED THIEF HATCH EXTENSION	
EPRV	1	A105	610 DIA (24") x 9.5 THK. API ROOF FLANGE	EPRV
	1	A106	610 DIA. (24") STD. SMLS PIPE x 275 LG.	
	1		**610 DIA. (24") 2524-111V-2-28/20.5**	
LT	1	316SS	60 DIA. (2") 3000# NPT FULL COUPLING	LEVEL TRANS.
	2	316SS	42 DIA. (1 1/4") 3000# NPT FULL COUPLING	
	1		**REDTAIL MODEL GAUGE BOARD/ FLOAT SYSTEM**	
			c/w GAUGE BOARD BRACKET	
			(ARGO TO INSTALL BRACKETS AND ANCHORS ONLY. GAUGE	
			SYSTEM SUPPLIED AND INSTALLED BY OTHERS)	
C1A-E	5	316SS	33 DIA. (1") 3000# NPT FULL COUPLING x 89 LG.	SAMPLE POINTS
C2	1	316SS	21 DIA. (1/2") 3000# NPT FULL COUPLING	LUBE CONNECTION
			(SEE SHT. B-7370 D1 FOR PIPING DETAILS)	
C3	1	316SS	48 DIA. (1 1/2") 3000# NPT FULL COUPLING x 102 LG.	RADAR TRANS.
N1	2	A105	168 DIA. (6") 150# RFSO FLG.	INLET
	1	A106	168 DIA. (6") SCH. 40S ERW SMLS PIPE x 422 LG.	
	1	316SS	27 DIA. (3/4") 3000# FULL CPLG w/ PLUG ON U/S OF NOZZLE	
	1	A36	**6.4 THK. PL. COMMON REPAD (SEE SHT. B-7370 D2 FOR DETAILS)**	
			(SEE SHT. B-7370 D1 FOR PIPING DETAILS)	
N2	2	A105	114 DIA. (4") 150# RFSO FLG.	PUMP SUCTION
	1	A106	114 DIA. (4") STD. SMLS PIPE x 509 LG.	
	1	316SS	27 DIA. (3/4") 3000# FULL CPLG w/ PLUG ON U/S OF NOZZLE	
	1	A36	**6.4 THK. PL. COMMON REPAD (SEE SHT. B-7370 D2 FOR DETAILS)**	
N3	2	316SS	168 DIA. (6") 150# RFSO FLG.	VAPOR OUT
	1	316SS	168 DIA. (6") SCH. 40S ERW SMLS PIPE x 360 LG.	
	1	316SS	27 DIA. (3/4") 3000# FULL CPLG w/ PLUG ON U/S OF NOZZLE	
	1	A36	**6.4 THK. PL. COMMON REPAD (SEE SHT. B-7370 D2 FOR DETAILS)**	
			(SEE SHT. B-7370 D1 FOR PIPING DETAILS)	
N4	1	A105	114 DIA. (4") 150# RFSO FLG.	DRAIN
	1	A106	114 DIA. (4") STD. SMLS PIPE x 219 LG.	
N5	1	A105	273 DIA. (10") 150# RFSO FLG.	VENT
	1	A106	273 DIA. (10") STD. SMLS PIPE x 242 LG.	
	1	A106	273 DIA. (10") 150# RF **BLIND** FLG.	**BLIND**
N6A	2	A105	168 DIA. (6") 150# RFSO FLG.	OVERFLOW
	1	A106	168 DIA. (6") STD. SMLS PIPE x 360 LG.	
N6B	2	A105	168 DIA. (6") 150# RFSO FLG.	OVERFLOW
	1	A106	168 DIA. (6") STD. SMLS PIPE x 360 LG.	
N7	1	A105	60 DIA. (2") 150# RFSO FLG.	BLANKET GAS
	1	A106	60 DIA. (2") STD. SMLS PIPE x 248 LG.	
N8	1	A105	114 DIA. (4") 150# RFSO FLG.	ANODE
	1	A106	114 DIA. (4") STD. SMLS PIPE x 220 LG.	
			(SEE SHT. B-7370 D2 FOR PIPING DETAILS)	
N9	2	A105	89 DIA. (3") 150# RFSO FLG.	SKIM
	1	A106	89 DIA. (3") STD. SMLS PIPE x 502 LG.	
	1	316SS	27 DIA. (3/4") 3000# FULL CPLG w/ PLUG ON U/S OF NOZZLE	
	1	A36	**6.4 THK. PL. COMMON REPAD (SEE SHT. B-7370 D2 FOR DETAILS)**	
			(SEE SHT. B-7370 D1 FOR PIPING DETAILS)	
N10	2	A105	89 DIA. (3") 150# RFSO FLG.	TRUCK OUT
	1	A106	89 DIA. (3") STD. SMLS PIPE x 645 LG.	
	1	A36	**6.4 THK. PL. COMMON REPAD (SEE SHT. B-7370 D2 FOR DETAILS)**	
N11	1	A105	114 DIA. (4") 150# RFSO FLG.	HLSD
	1	A106	114 DIA. (4") STD. SMLS PIPE x 219 LG.	
N12	1	A105	114 DIA. (4") 150# RFSO FLG.	LLSD
	1	A106	114 DIA. (4") STD. SMLS PIPE x 219 LG.	
N13	1	A105	60 DIA. (2") 150# RFSO FLG.	TIT
	1	A106	60 DIA. (2") STD. SMLS PIPE x 218 LG.	
HE1	2	316SS	89 DIA. (3") 150# RFSO FLG.	ELECTRIC HEATER 1
	1	316SS	89 DIA. (3") 40S ERW. SMLS PIPE x 355 LG.	
			(SEE SHT. B-7370 D2 FOR PIPING DETAILS)	
HE2	2	316SS	89 DIA. (3") 150# RFSO FLG.	ELECTRIC HEATER 2
	1	316SS	89 DIA. (3") 40S ERW. SMLS PIPE x 355 LG.	
			(SEE SHT. B-7370 D2 FOR PIPING DETAILS)	

NOZZLES

MARK	PROJECTION EXT.	PROJECTION INT.	ELEV.	ORIE.	NOTES
C1A-E	64mm	–	1061mm	45°	SAMPLE CONN.
C2	64mm	–	1000mm	22°	LUBE CONN.
C3	76mm	–	ROOF	245°	RADAR TRANS.
LT	76mm	–	ROOF	195°	LEVEL TRANS.
N1	237mm	152mm	894mm	–	INLET
N2	309mm	152mm	457mm	–	PUMP SUCTION
N3	203mm	152mm	1417mm	0°	VAPOR OUT
N4	203mm	25mm	127mm	165°	DRAIN
N5	203mm	25mm	ROOF	–	VENT
N6A	203mm	152mm	3048mm	270°	OVERFLOW
N6B	203mm	152mm	3048mm	90°	OVERFLOW
N7	237mm	25mm	7137mm	–	BLANKET GAS
N8	203mm	25mm	294mm	315°	ANODE
N9	309mm	152mm	594mm	–	SKIM
N10	425mm	152mm	457mm	–	TRUCK OUT
N11	203mm	25mm	6834mm	238°	HLSD
N12	203mm	25mm	610mm	238°	LLSD
N13	203mm	25mm	305mm	300°	TIT
HE1	215mm	152mm	305mm	–	ELEC. HEATER 1
HE2	215mm	152mm	305mm	–	ELEC. HEATER 2

DESIGN NOTES

1. TANK TO BE BUILT AND TESTED TO API-12F SPEC. MODIFIED (NON LABELED)
2. TANK TO BE AIR/SOAP LEAK TESTED TO **12 OZ. / SQ. IN.** 3
3. ESTIMATED SHIPPING WEIGHT = 14200 LBS. (6455 KG)
4. ROOF/ SHELL JOINTS NOT TO BE BACKWELDED.
5. REFER TO ORIENTATION DRAWING FOR PROPER LOCATION OF ALL NOZZLES, COUPLINGS, ETC.
6. ALL DIMENSIONS ARE IN mm.
7. ALL ELEVATIONS TAKEN FROM TOP OF TANK FLOOR
8. EXTERNAL STUDS / NUTS / GASKETS : **B7M / 2HM / NEO(STD) SOUR (MANWAY) / 316SS FLEX (FLANGES)**
9. INTERNAL STUDS / NUTS / GASKETS : **B8M/8M / 316SS FLEX (FLANGES)**
10. **CAGE LADDER/ SAMPLE BOX/ ROOF PLATFORM TO BE SHIPPED LOOSE.**
11. **ALUMINUM ANODES TO BE SHIPPED LOOSE.**
12. **HEAT NUMBERS AND MTR'S TO RECORDED.**
13. BOLT HOLES TO STRADDLE PRIMARY CENTERLINES.
14. **IMMERSION HEATERS TO BE SHIPPED LOOSE.**
15. **KENILWORTH SYSTEM SHIPPED LOOSE AND INSTALLED BY OTHERS.**

INTERNAL & EXTERNAL FINISH

1. INTERNAL FINISH

BLAST: SSPC-SP5 WHITE METAL BLAST USING SIL 7 SAND
COATING: 20.0 - 40.0 MILS DFT OF ENVIROLINE EC-376 EPOXY COATING

2. EXTERNAL FINISH

BLAST: SSPC-SP6 COMMERCIAL BLAST
INSULATION: 2" MINERAL WOOL INSULATION & 0.20" SMOOTH CORRUGATED ALUMINUM CLADDING c/w ¾" STAINLESS STEEL BANDING. **COLOR: STONE GRAY**
PAINT: ALL PROJECTIONS WITH 1.5-2.0 MILS DFT OF CLOVERDALE MARINE ENAMEL- **COLOR STONE GRAY**

3. BOTTOM FINISH

BLAST: SSPC-SP6 COMMERCIAL BLAST
COATING: 15 - 20 MILS DFT OF COAL TAR EPOXY

REVISIONS

NO.	DESCRIPTION	BY	DATE
3	ISSUED FOR FABRICATION	RR	07.25.05
2	ISSUED FOR PARTS AND ORDERING ONLY	RR	07.12.05
1	ISSUED FOR APPROVAL	RR	06.10.05
0	ISSUED FOR REVIEW/MARKUP	RR	06.06.05

CUSTOMER: FORT ENERGY CORPORATION c/o BDR ENGINEERING LTD.
R.P.O# 43874-27 REV. 0
LOCATION: LSD 11-17-63-06-W5M (CLEAR WATER GAS PLANT)

TITLE: ONE(1) 120 CU. M. (750 BBL)
4724 DIA. x 7315 HIGH
SINGLE WALL STORAGE TANK

ARGO SALES LTD

APPROVED BY:		CHECKED BY:		DRAWN BY:	RR
DATE:	05/27/05	TAG #:	T-700	DRAWING #:	B-7370
SHEET:	1 OF 6	SCALE:	NTS	SERIAL #:	7370

REV. 3

QUOTE #: TQ05-234E_R1

CUSTOMER: FORT ENERGY c/o BDR ENGINEERING

TITLE: 750BBL SINGLE WALL STORAGE TANK

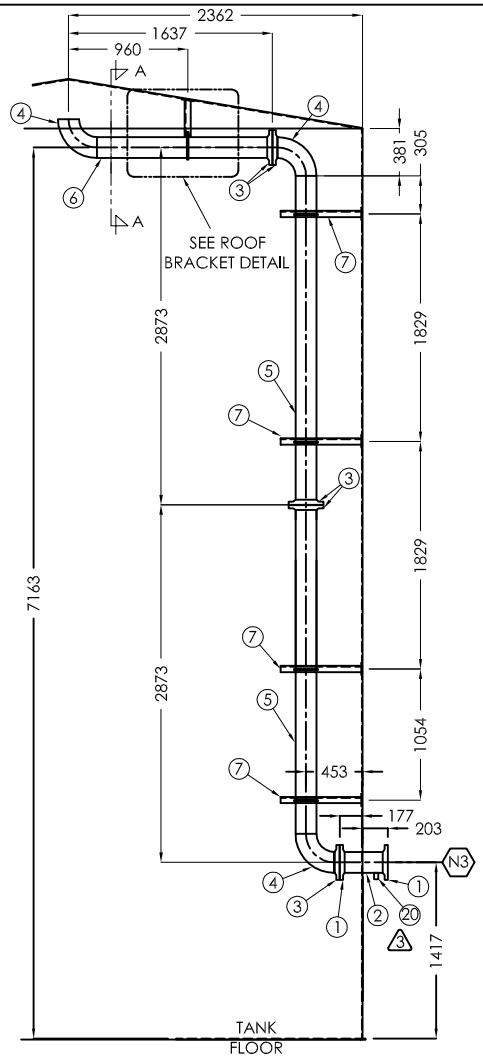

N3-VAPOR OUT DETAIL

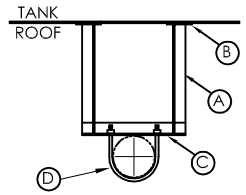

SECTION A-A:
ROOF BRACKET DETAIL

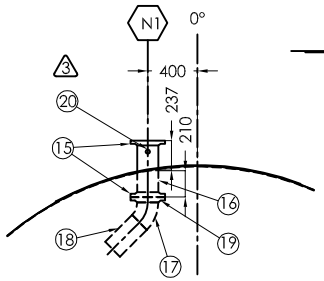

N1- INLET DETAIL

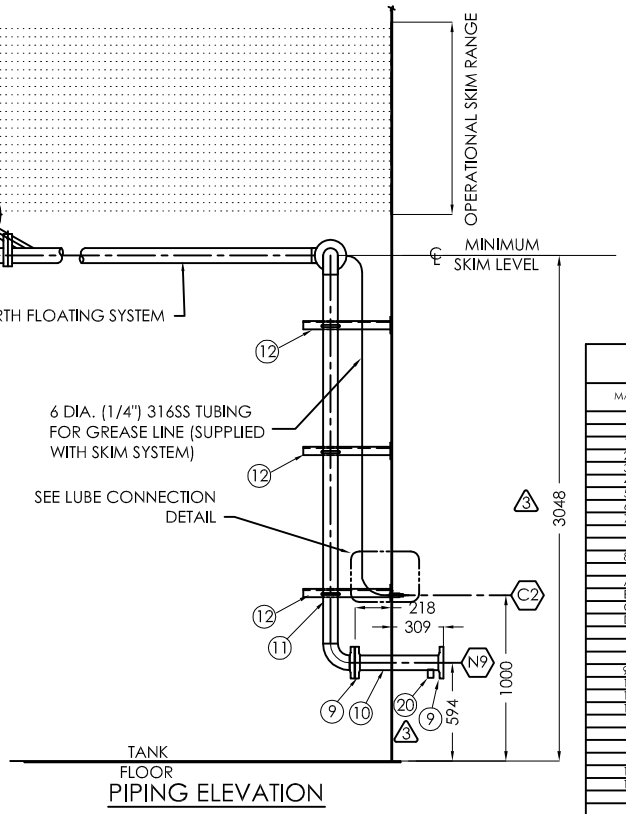

PIPING ELEVATION

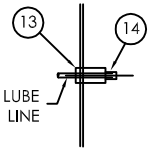

LUBE CONNECTION

BILL OF MATERIALS

MARK	QTY	MAT'L	DESCRIPTION	SERVICE
			N3 - VAPOR OUT	
1	2	316SS	168 DIA. (6") 150# RFSO FLG.	
2	1	316SS	168 DIA. (6") SCH. 40S ERW SMLS PIPE x 360 LG.	
3	5	316SS	168 DIA. (6") 150# RFSO FLG.	
4	3	316SS	168 DIA. (6") 10S 90° LRWE	
5	2	316SS	168 DIA. (6") SCH. 10S ERW SMLS PIPE x 2628 LG.	
6	1	316SS	168 DIA. (6") SCH. 10S ERW SMLS PIPE x 1394 LG.	
7	4	316SS	50 x 50 x 6 ANGLE x TO BE SHOP DETERMINED	
	4	316SS	6 THK. x 100 SQ. BASE PLATE	
	4	316SS	168 DIA (6") U-BOLT c/w NUTS	
8	1	316SS	ROOF SUPPORT **(SEE DETAIL THIS SHT.)**	
A	1	316SS	50 x 50 x 6 ANGLE x TO BE SHOP DETERMINED	
B	1	316SS	6 THK. x 100 SQ. BASE PLATE	
C	1	316SS	50 x 50 x 6 ANGLE x TO BE SHOP DETERMINED	
D	1	316SS	168 DIA (6") U-BOLT c/w NUTS	
			N9 - SKIM	
9	2	A105	88 DIA. (3") 150# RFSO FLANGE	
10	1	A106	89 DIA. (3") STD. SMLS x 502 LG.	
11	1	316SS	KENILWORTH FLOATING SKIM	
12	3	316SS	50 x 50 x 6 ANGLE x TO BE SHOP DETERMINED	
	3	316SS	6 THK. x 100 SQ. BASE PLATE	
	3	316SS	89 DIA (3") U-BOLT c/w NUTS	
			C2-EXTERNAL LUBE LINE CONNECTION	
13	1	316SS	21 DIA. (1/2") 3000# NPT FULL COUPLING	
14	1	A105	1/2" TO 1/4" REDUCING BUSHING 3000# NPT w/ 1/4" PLUG	
			N1 - INLET	
15	2	A105	168 DIA. (6") 150# RFSO FLANGE	
16	1	A106	168 DIA. (6") SCH. 40S ERW SMLS PIPE x 422 LG.	
17	1	316SS	168 DIA. (6") 10S 45° ELL.	
18	1	316SS	168 DIA. (6") SCH. 10S ERW SMLS PIPE x 305 LG.	
19	1	316SS	168 DIA. (6") 150# RFSO FLANGE	
			DRAIN POINTS FOR N1, N3, & N9	
20	3	316SS	27 DIA. (3/4") 3000# FULL CPLG w/ PLUG ON U/S OF NOZZLE	

NOZZLES

MARK	PROJ. EXT.	PROJ. INT.	ELEV.	ORIE.	NOTES
C2	64mm	–	1000mm		LUBE CONN.
N1	237mm	152mm	849mm		INLET
N3	203mm	152mm	1417mm		VAPOR OUT
N9	309mm	152mm	594mm		SKIM

DESIGN NOTES

1. ALL DIMENSIONS ARE IN mm.
2. KENILWORTH SYSTEM SHIPPED LOOSE AND INSTALLED BY OTHERS.

INTERNAL & EXTERNAL FINISH

REVISIONS

NO.	DESCRIPTION	BY	DATE
3	ISSUED FOR FABRICATION	RR	07.25.05
2	ISSUED FOR PARTS AND ORDERING ONLY	RR	07.12.05
1	ISSUED FOR APPROVAL	RR	06.10.05
0	ISSUED FOR REVIEW/ APPROVAL	RR	06.06.05

CUSTOMER: FORT ENERGY CORPORATION c/o BDR ENGINEERING LTD.
R.P.O# 43874-27 REV. 0
LOCATION: LSD 11-17-63-06-W5M (CLEAR WATER GAS PLANT)

TITLE:

NOZZLE DETAILS

ARGO SALES LTD

APPROVED BY:		CHECKED BY:		DRAWN BY:	RR
DATE:	05/27/05	TAG #:	T-700	DRAWING#:	B-7370_D1
SHEET:	2 OF 6	SCALE:	NTS	SERIAL#:	7370

REV. 3

QUOTE #: TQ05-234E_R1

FORT ENERGY c/o BDR ENGINEERING

CUSTOMER:

NOZZLE DETAILS

TITLE:

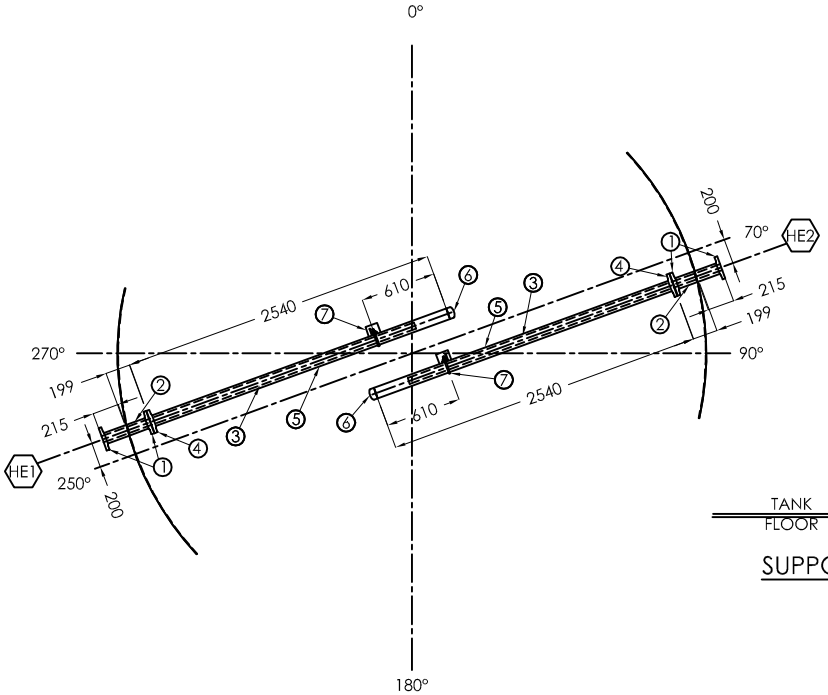

IMMERSION HEATER WELL ORIENTATION

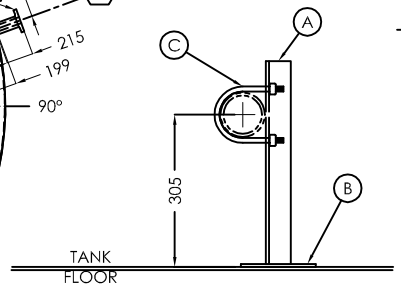

SUPPORT BRACKET DETAIL

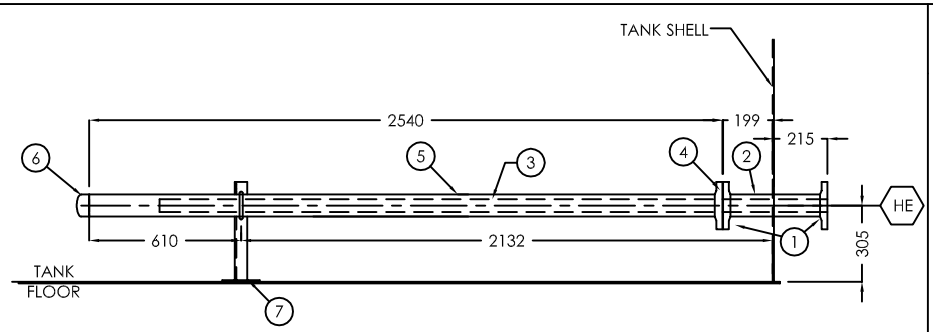

IMMERSION HEATER WELL ELEVATION

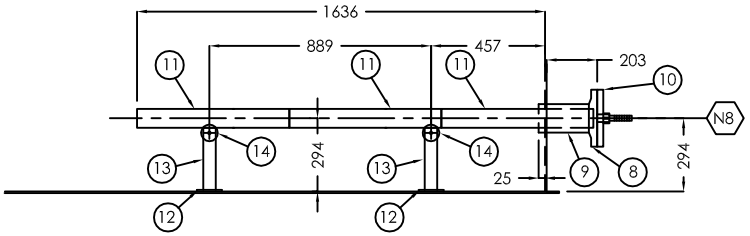

N8 - ANODE

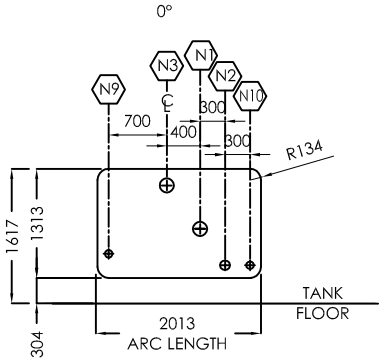

COMMON REPAD

ROLL TO TANK O.D. - INCLUDE WEEP HOLES

BILL OF MATERIALS

MARK	QTY	MAT'L	DESCRIPTION	SERVICE
			HE- IMMERSION HEATER WELL	
1	4	316SS	89 DIA. (3") 150# RFSO FLANGE	
2	2	316SS	89 DIA. (3") STD. SMLS x 355 LG.	
3	2		2667 LG. (105") PIPE-INSERT **(SEE DESIGN NOTE #2 & 3)**	
4	2	316SS	89 DIA. (3") 150# RFSO FLANGE	
5	2	316SS	89 DIA. (3") STD. SMLS x 2525 LG.	
6	2	316SS	89 DIA. (3") STD. SCH. 40 WELD CAP	
7	2		SUPPORT BRACKET (SEE DETAIL THIS SHT.)	
			HEATER WELL SUPPORT BRACKET	
A	2	316SS	6.4 x 51 x 51 ANGLE x SHOP TO DETERMINE LENGTH	
B	2	316SS	6.4 x 100 x 100 BASEPLATE	
C	2	316SS	89 DIA. (3") U-BOLT c/w NUTS	
			N8 - ANODE	
8	1	A105	114 DIA. (4") 150# RFSO FLANGE	
9	1	A106	114 DIA. (4") STD. SMLS x 2201 LG.	
10	1	A105	114 DIA. (4") 150# BLIND FLANGE	
11	3		76 x 610 ALUM. ANODE MOUNTED ON 114 DIA. (4") BLIND FLG. c/w 114 DIA. FLG INSULATION KIT	
12	2	A36	6.4 PL x 100 x 178 BASE PLATE	BASE PL.
13	4	316SS	6.4 PL x 50 x 50 x 245 LG.	SIDE
14	2		76 DIA. (3") WOODEN ANODE WHEEL	

NOZZLES

MARK	PROJECTIONS EXT.	PROJECTIONS INT.	ELEV.	ORIE.	NOTES
HE1	215mm	152mm	305mm	250°	ELEC. HEATER 1
HE2	215mm	152mm	305mm	70°	ELEC. HEATER 2
N8	203mm	25mm	294mm	315°	ANODE

DESIGN NOTES

1. ALL DIMENSIONS ARE IN mm.
2. PIPE INSERT IMMERSION HEATER 1:
   - **MODEL # MXI305F3105X 480V 3 Φ 5KW**
   - -3" 150 # FLANGE
   - -105" INSERT LENGTH
   - -EXPLOSION PROOF TERMINAL BOX
   - -3" HEATER WELL (316SS SCH. 40) c/w FLOOR SUPPORTS
3. PIPE INSERT IMMERSION HEATER 2:
   - **MODEL # MXI305F3105TX 480V 3 Φ 5KW**
   - -3" 150 # FLANGE
   - -105" INSERT LENGTH
   - -EXPLOSION PROOF TERMINAL BOX
   - -300°F TO 700°F PILOT DUTY CYCLING HIGH LIMIT
   - -3" HEATER WELL (316SS SCH. 40) c/w FLOOR SUPPORTS

INTERNAL & EXTERNAL FINISH

REVISIONS

NO.	DESCRIPTION	BY	DATE
3	ISSUED FOR FABRICATION	RR	07.25.05
2	ISSUED FOR PARTS AND ORDERING ONLY	RR	07.12.05
1	ISSUED FOR APPROVAL	RR	06.10.05
0	ISSUED FOR REVIEW/ APPROVAL	RR	06.06.05

CUSTOMER: FORT ENERGY CORPORATION c/o BDR ENGINEERING LTD.
R.P.O# 43874-27 REV. 0
LOCATION: LSD 11-17-63-06-W5M (CLEARWATER GAS PLANT)

TITLE: ELECTRIC HEATERS, ANODE AND COMMON REPAD DETAIL

ARGO SALES LTD

APPROVED BY:		CHECKED BY:		DRAWN BY:	RR
DATE:	05/31/05	TAG #:	T-700	DRAWING#:	B-7370_D2
SHEET:	3 OF 6	SCALE:	NTS	SERIAL#:	7370

REV. 3

FORT ENERGY c/o BDR ENGINEERING

CUSTOMER:

NOZZLE DETAILS

TITLE:

QUOTE #: TQ05-234E_R1

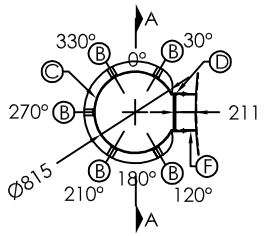

ORIENTATION

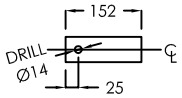

DETAIL #1

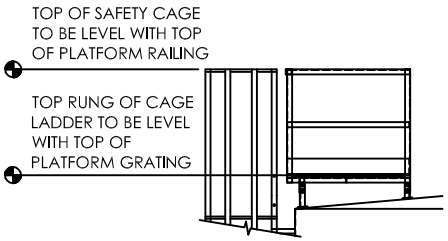

SAFETY CAGE/PLATFORM ELEVATION

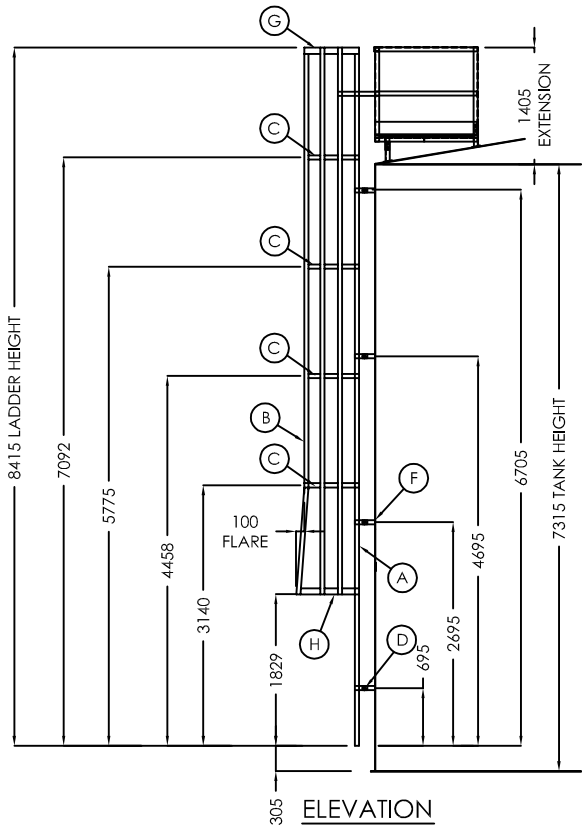

ELEVATION

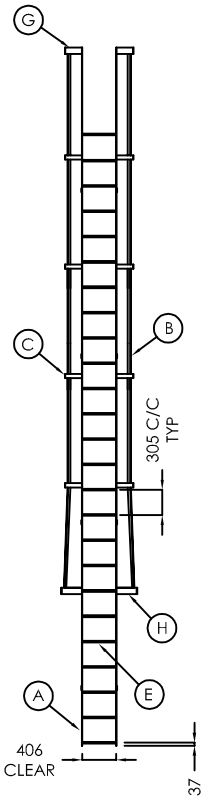

SECTION A-A

BILL OF MATERIALS

MARK	QTY	MAT'L	DESCRIPTION	SERVICE
A	2	A36	6.4 THK x 50 FLAT BAR x 8415 LG.	
B	5	A36	6.4 THK x 45 FLAT BAR x 6592 LG.	
C	4	A36	6.4 THK x 50 FLAT BAR x 2143 LG. ROUND TO 815 Ø	
D	8	A36	6.4 THK x 50 FLAT BAR x 153 LG. (SEE DETAIL #1) WELD TO LADDER	
E	25	A36	19Ø (3/4") ROUND BAR x 419 LG. (LADDER RUNGS)	
F	8	A36	6.4 THK x 50 FLAT BAR x 153 LG. (SEE DETAIL #1) WELD TO TANK SHELL	
G	1	A36	6.4 THK x 76 FLAT BAR x 2143 LG. ROUND TO 815 Ø	
H	1	A36	6.4 THK x 76 FLAT BAR x 2676 LG. ROUND TO 1018 Ø	

NOZZLES

MARK	PROJ.	ELEV.	NOTES

DESIGN NOTES

1. ALL DIMENSIONS ARE IN mm.
2. **CAGED LADDER TO BE SHIPPED LOOSE.**

INTERNAL & EXTERNAL FINISH

CAGED LADDER FINISH

BLAST: SSPC-SP6 COMMERCIAL BLAST
PRIMER: 1.5 - 2.0 MILS DFT CLOVERDALE TOWER OR RUSTEX #71024 GRAY
PAINT: 1.5 - 2.0 MILS DFT CLOVERDALE MARINE ENAMEL. **COLOR- STONE GRAY**

REVISIONS

NO.	DESCRIPTION	BY	DATE
1	ISSUED FOR FABRICATION	RR	07.12.05
0	ISSUED FOR REVIEW/APPROVAL	RR	06.06.05

CUSTOMER: FORT ENERGY CORPORATION c/o BDR ENGINEERING LTD.
R.P.O# 43874-27 REV. 0
LOCATION: LSD 11-17-63-06-W5M (CLEAR WATER GAS PLANT)

TITLE: CAGE LADDER DETAILS

ARGO SALES LTD

APPROVED BY:		CHECKED BY:		DRAWN BY:	RR
DATE:	05/27/05	TAG #:	T-700	DRAWING#:	B-7370_CL
SHEET:	4 OF 6	SCALE:	NTS	SERIAL#:	7370

REV. 1

QUOTE #: TQ05-234E_R1

CUSTOMER: FORT ENERGY c/o BDR ENGINEERING

TITLE: CAGE LADDER DETAILS

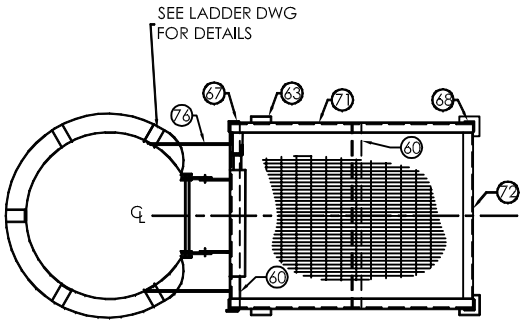

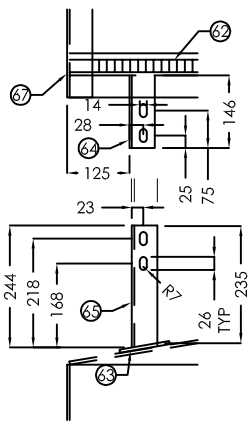

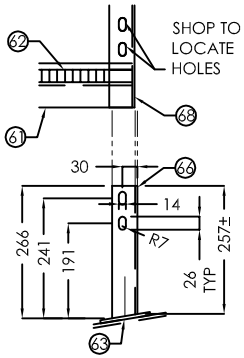

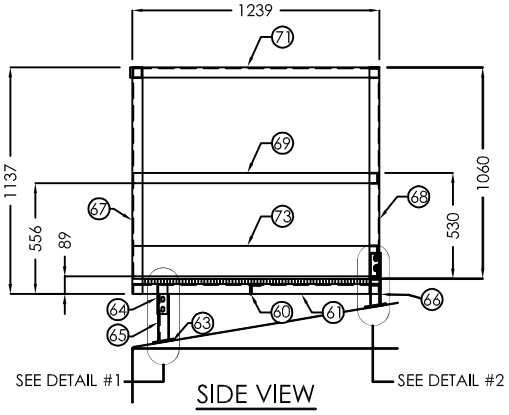

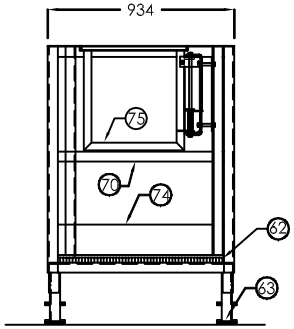

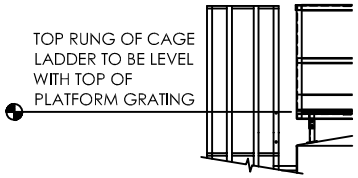

BILL OF MATERIALS

MARK	QTY	MAT'L	DESCRIPTION	SERVICE
60	3	A36	51 x 51 x 6.4 ANGLE 922 LG. (COPE TO FIT)	
61	2	A36	51 x 51 x 6.4 ANGLE IRON 1227 LG.	
62	1	A36	25 x 4.8 BAR GRATING 12 sq. ft. **(SERRATED)**	
63	4	A36	102 x 102 REPAD W/ 6mm WEEP HOLE 6.4 THK.	SUPPORT BASE
64	2	A36	51 x 51 x 6.4 ANGLE IRON 146 LG.	FRONT LEG
65	2	A36	51 x 51 x 6.4 ANGLE IRON 244 LG.	FRONT SUPPORT
66	2	A36	51 x 51 x 6.4 ANGLE IRON 266 LG.	REAR SUPPORT
67	2	A36	51 x 51 x 6.4 ANGLE IRON 1137 LG.	FRONT POST
68	2	A36	51 x 51 x 6.4 ANGLE IRON 1137 LG.	REAR POST
69	2	A36	51 x 6.4 FLAT BAR 1227 LG.	MID RAIL
70	1	A36	51 x 6.4 FLAT BAR 910 LG.	REAR MID RAIL
71	2	A36	51 x 51 x 6.4 ANGLE IRON 1227 LG.	TOP RAIL
72	1	A36	51 x 51 x 6.4 ANGLE IRON 914 LG.	REAR TOP RAIL
73	2	A36	152 x 6.4 FLAT BAR x 1227 LG.	SIDE TOE RAIL
74	1	A36	152 x 6.4 FLAT BAR 910 LG.	REAR TOE RAIL
75	1		SAFETY GATE	SAFETY GATE
76	2	A36	6.4 THK x 51 FLAT BAR CAGE BRACE (SHOP TO FIT C/W BOLT CONNECTION)	

NOZZLES

MARK	PROJ.	ELEV.	NOTES

DESIGN NOTES

1. ALL DIMENSIONS ARE IN mm.

INTERNAL & EXTERNAL FINISH

1. PLATFORM FINISH

BLAST: SSPC-SP6 COMMERCIAL BLAST USING SIL 7 SAND
PRIME: 1.5 - 2.0 mils DFT CLOVERDALE TOWER OR RUSTEX #71029
PAINT: 1.5 - 2.0 mils DFT CLOVERDALE MARINE ENAMEL, **COLOR-STONE GRAY**

REVISIONS

NO.	DESCRIPTION	BY	DATE
1	ISSUED FOR FABRICATION	RR	07.12.05
0	ISSUED FOR APPROVAL	RR	06.06.05

CUSTOMER: FORT ENERGY CORPORATION c/o BDR ENGINEERING LTD.
R.P.O# 43874-27 REV. 0
LOCATION: LSD 11-17-63-06-W5M (CLEAR WATER GAS PLANT)

TITLE: ROOF PLATFORM DETAIL

ARGO SALES LTD

APPROVED BY:		**CHECKED BY:**		**DRAWN BY:**	RR
DATE:	05/27/05	**TAG #:**	T-700	**DRAWING #:**	B-7370_RP
SHEET:	5 **OF** 6	**SCALE:**	NTS	**SERIAL #:**	**7370**

REV. 1

CUSTOMER: FORT ENERGY c/o BDR ENGINEERING

TITLE: ROOF PLATFORM DETAIL

QUOTE #: TQ05-234E_R1

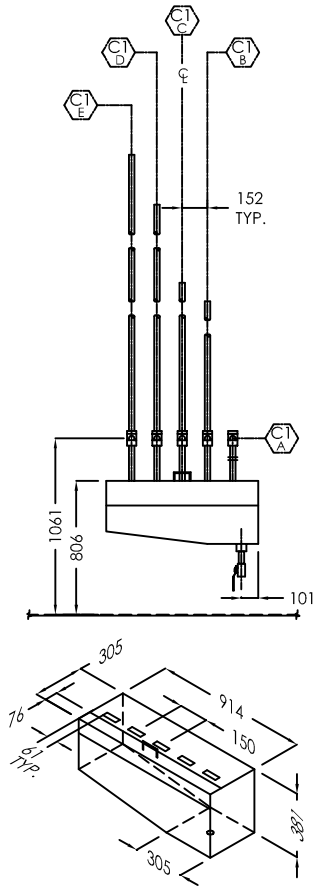

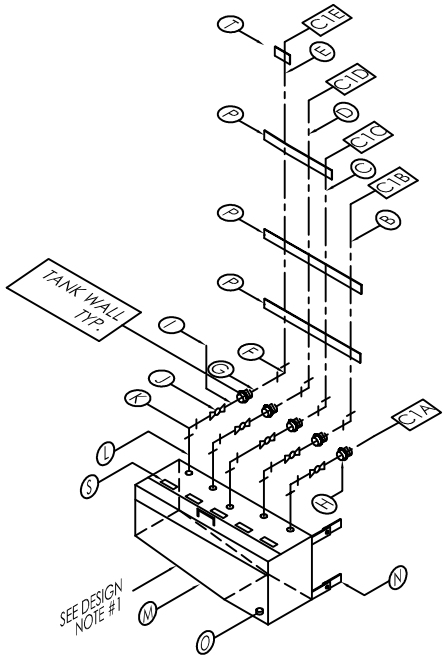

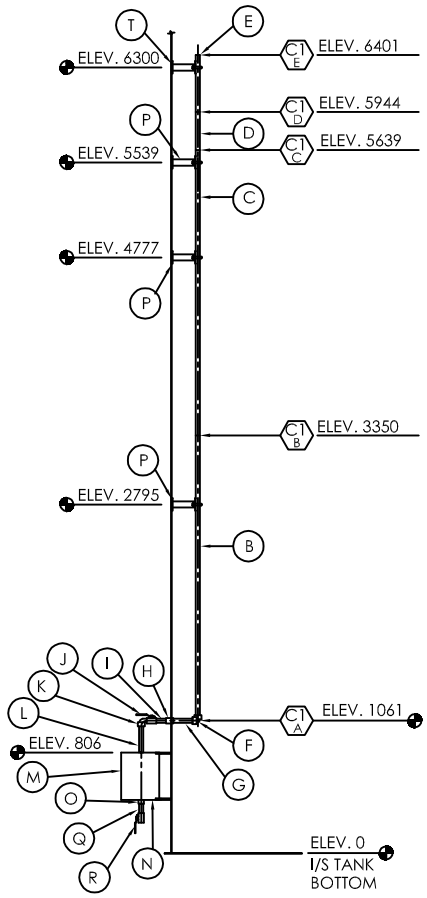

BILL OF MATERIALS

MARK	QTY	MAT'L	DESCRIPTION	SERVICE
A			NOT REQUIRED	
B	1	316SS	33 DIA. (1") THR'D PIPE x 2258 LONG	
C	1	316SS	33 DIA. (1") THR'D PIPE x 4547 LONG	
D	1	316SS	33 DIA. (1") THR'D PIPE x 4852 LONG	
E	1	316SS	33 DIA. (1") THR'D PIPE x 5309 LONG	
F	4	316SS	33 DIA. (1") 150# 90° THR'D ELBOW	
G	4	316SS	33 DIA. (1") THR'D PIPE x 185 LONG	
H	5	316SS	33 DIA. (1") 3000# FULL CPLG. x 89 LG.	
I	6	316SS	33 DIA. (1") SCH. 80S THR'D NIPPLE x 76 LONG	
J	6		33 DIA. (1") NAVCO-NUTRON ECONOMY BAR STOCK	
			2000# THR'D BALL VALVE, NACE SPEC. c/w 316SS TRIM	
K	5	A105	33 DIA. (1") 3000# 90° STREET ELBOW	
L	5	A106	33 DIA. (1") THR'D NIPPLE x 256 LONG	
M	1	A36	SAMPLE BOX (RIGHT HAND) - SEE DETAILS THIS SHEET-	
N	3	A36	SAMPLE BOX CLIP c/w BOLT	
O	1	A105	60 DIA. (2") COUPLING	
P	6	A36	6.4 THK. x 100 x 100 LONG FLAT BAR	TAB BASEPLATE
	6	316SS	6.4 THK. x 50 FLAT BAR (LENGTH TO BE SHOP DETERMINED)	TABS
	3	316SS	6.4 THK. x 50 FLAT BAR (LENGTH TO BE SHOP DETERMINED)	PIPE SUPPORTS
	11	304SS	U-BOLTS c/w NUTS	
Q	1	A106	60 DIA. (2") THR'D NIPPLE x 76 LONG	
R	1		60 DIA. (2") NAVCO-NUTRON ECONOMY BAR STOCK	
			2000# THR'D BALL VALVEW NACE SPEC. c/w 316SS TRIM	
S	5	316SS	4.8 THK. x 25 x 76 LG. ELEVATION TAGS (MAX. ELEVATION	
			OF INTERNAL PIPING TO BE STAMPED ON TAGS)	
T	1	A36	6.4 THK. x 100 x 100 LONG FLAT BAR	
	1	316SS	6.4 THK. x 50 x 50 ANGLE (LENGTH TO BE SHOP DETERMINED)	
	1	304SS	U-BOLT c/w NUT	

NOZZLES

MARK	PROJ.	ELEV.	NOTES
C1A	N/A	1061mm	
C1B	N/A	1061mm	
C1C	N/A	1061mm	
C1D	N/A	1061mm	
C1E	N/A	1061mm	

DESIGN NOTES

1. ALL DIMENSIONS ARE IN mm.
2. ALL ELEVATIONS TAKEN FROM TOP OF TANK FLOOR.
3. SAMPLE BOX TO BE REMOVEABLE.

INTERNAL & EXTERNAL FINISH

SAMPLE BOX FINISH

BLAST: SSPC-SP6 COMMERCIAL BLAST USING SIL 7 SAND
PRIME: 1.5 - 2.0 mils DFT CLOVERDALE TOWER OR RUSTEX #71029
PAINT: 1.5 - 2.0 mils DFT CLOVERDALE MARINE ENAMEL, **COLOR-STONE GRAY**

REVISIONS

NO.	DESCRIPTION	BY	DATE
2	ISSUED FOR FABRICATION	RR	07.25.05
1	ISSUED FOR PARTS AND ORDERING ONLY	RR	07.12.05
0	ISSUED FOR REVIEW/MARKUP	RR	06.06.05

CUSTOMER: FORT ENERGY CORPORATION c/o BDR ENGINEERING LTD.
R.P.O# 43874-27 REV. 0
LOCATION: LSD 11-17-63-06-W5M (CLEAR WATER GAS PLANT)

TITLE: - SAMPLE BOX AND PIPING DETAILS - (RIGHT HAND)

ARGO SALES LTD

APPROVED BY:		CHECKED BY:		DRAWN BY:	RR
DATE:	05/27/05	TAG #:	T-700	DRAWING #:	B-7370_SB
SHEET:	6 OF 6	SCALE:	NTS	SERIAL #:	7370

REV. 2

QUOTE #: TQ05-234E_R1

TITLE: - SAMPLE BOX AND PIPING DETAILS (RIGHT HAND) -

CUSTOMER: FORT ENERGY c/o BDR ENGINEERING

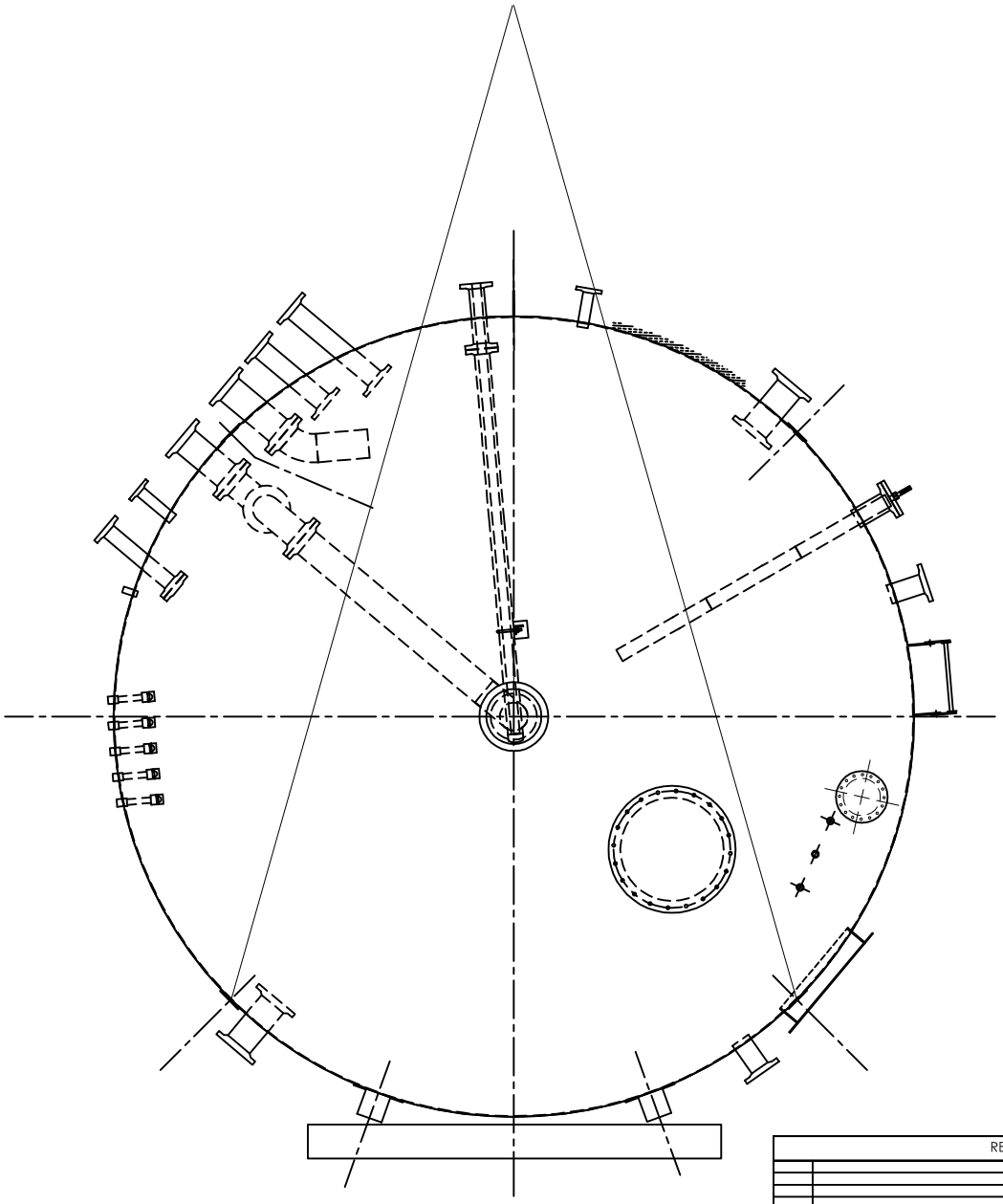

REVISIONS			
0			
NO.	DESCRIPTION	BY	DATE

TITLE: LIFT LUG LAYOUT

ARGO SALES LTD

APPROVED BY:		CHECKED BY:		DRAWN BY:	RR
DATE:	05/27/05	TAG #:	-	DRAWING #:	B-7370
SHEET:	OF	SCALE:	NTS	SERIAL #:	7370

REV. 0

CUSTOMER: FORT ENERGY c/o BDR ENGINEERING

TITLE: LIFT LUG LAYOUT

QUOTE #: TQ05-234E_R1