Branch to fill in below:

Sect.:	Structure Type:	Horizontal Bus	Vertical Bus	Horizontal Gnd. Bus (NHG1-1/4x1/4)
A	MCBB-NF3-080x050	MCB3-E3F-25BR+H25-F080x050		50/65F080-BT
B, C, D, E	NP3-050x050+PWT	H25-65PV050	NV04-65	50/65P050-BT

Unit	Qty.	Drawer Type	Fixed Mounting Plate Type	Door Type	Hole Code	"PP" Code
1	1		FPF080-6W-SP	NDF080-6+P		
2	1			NDF080-18+P		
3	1	DUR4		NDP038-4+P		
4	1	DUR4		NDP038-4+P		184
6	1		FPP050-3W/12W	NDP050-16+P		
7	1	DUR4		NDP038-4+P		
8	1	DUR4		NDP038-4+P		184
10	1		FPP050-3W/12W	NDP050-16+P		
11	1	DUR4		NDP038-4+P		
12	1	DUR4		NDP038-4+P		
14	1		FPP050-3W/12W	NDP050-16+P		
15	1			NDP038-4+P		
16	1	DUR4		NDP038-4+P		
18	1		FPP050-3W/12W	NDP050-16+P		

Busbars: Tin-plated Copper (Standard)

Main Bus: 800A ☐ 1200A ☐ 1600A ☐ 2000A ☐ 2500A ■ 3000A ☐

Vertical Bus: Std. 400A ■ 600A ☐ | Ground Bus: 400A

Short Circuit Bracing: 65kA | Neutral Bus: N/A

Incoming Entry: Top ☐ Bottom ■ | Incoming Section: A No./Phase: B

Outgoing Lines: Top ☐ Bottom ☐ | Cable ■ Size: 500MCM Al ☐ Cu ■

Unit Mounting: Front Only | Enclosure Type: Eemac 1A

Finish: Standard Grey | Back Acess: Yes ☐ No ■

Notes - Factory Only:

- UNIT #2 DOOR c/w SEALING PROVISION
- UNITS #6, #10, #14 & #18 DOORS c/w TOC 4035
- SECTIONS 'B', 'C', 'D' & 'E' c/w AMB-500, TR-P050x050 & VERTICAL BUS CUT AT 10MOD

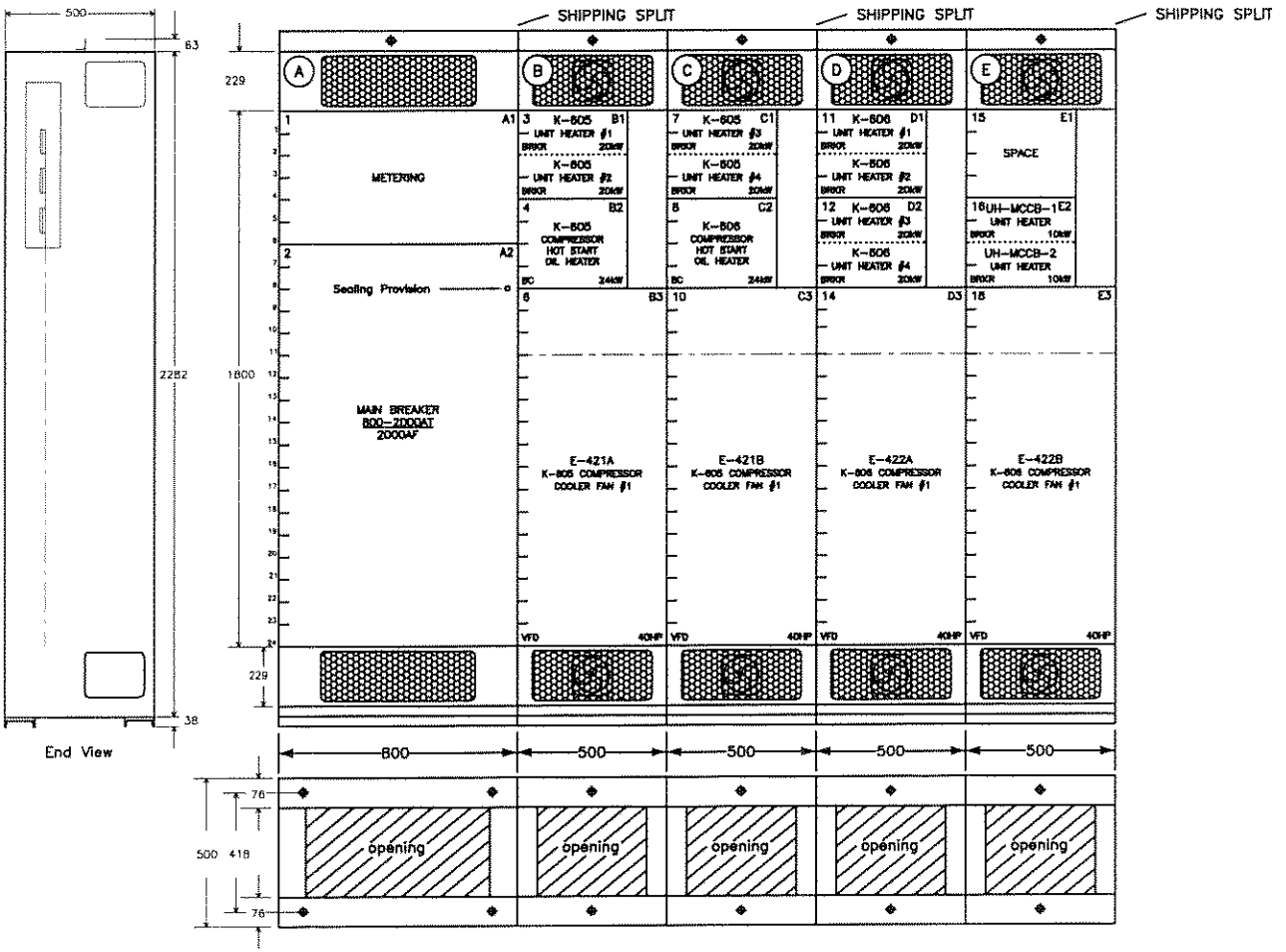

Notes:

- PHASE IDENTIFICATION ARE REQUIRED

Rev.	Description	Date	Appr.
2	UNITS #6, #10, #14 & #18 TAGS UPDATED	JUN 28 06	AH
1	CHANGED VFD HP FROM 30 TO 40HP	JUN 16 06	DRJ

PROJECT CLEARWATER GAS PLANT (MCC-300)
CUSTOMER FORT ENERGY CORP.
LOCATION LSD 11-17-63-06 W5M CUST ORDER #
QUOTATION Q21-06-0180 MOELLER ORDER # 21-06-3563

Wiring: Class: 1 Type: B Coil volts: 120
Line volts: 480 Phase: 3 Wire: 3 Hertz: 60

DRAWN AH | CHECKED | DATE MAY 16 06 | APPROVED

MOTOR CONTROL CENTRE
MCC 3000

MOELLER CALGARY BRANCH

Dwg # 3WD-463-21-06-3563-1

Unit No.	Qty.	HP	FLA	Mag trip setting (A)	Power wire size (awg)	Power plug MPA	Starter Type	Catalogue Number: Contactor DIL	Catalogue Number: Circuit Protective Device	Catalogue Number: Overload Relay	Pilot Devices: Pushbuttons or Selector Switch	Pilot Devices: Lights R	Pilot Devices: Lights G	Pilot Devices: Lights SP	Control Transformer VA	Control Transformer Amps	Notes	Unit Height (mod)	Unit Wiring Diagram 3wd-463-	Unit Layout Drawing No.
1	1						METERING								75	0.75	SEE DRAWING FOR PARTS INFORMATION	6	21-06-3563-A	
2	1		2000	24000			MAIN BRKR		ABB E3S-A20-LSI								SEE DRAWING FOR PARTS INFORMATION	18	21-06-3563-A	
3	1	20/20kW	30/30	360/360		2x6	DUAL BRKR		2x NZMH2-AF30-NA									4	21-06-3563-G	
4	1	24kW	40	480	8	6	BRKR CONTACTOR	M40/22	NZMH2-AF40-NA			1	1		50	0.5	SEE DRAWING FOR PARTS INFORMATION	4	21-06-3563-B	
																		4		
6	1	40	50	600	6	4	VFD		NZMH2-AF90-NA						150	1.5	SEE DRAWING FOR PARTS INFORMATION	12	21-06-3563-E	
7	1	20/20kW	30/30	360/360		2x6	DUAL BRKR		2x NZMH2-AF30-NA									4	21-06-3563-G	
8	1	24kW	40	480	8	6	BRKR CONTACTOR	M40/22	NZMH2-AF40-NA			1	1		50	0.5	SEE DRAWING FOR PARTS INFORMATION	4	21-06-3563-B	
9	1																	4		
10	1	40	50	600	6	4	VFD		NZMH2-AF90-NA						150	1.5	SEE DRAWING FOR PARTS INFORMATION	12	21-06-3563-E	
11	1	20/20kW	30/30	360/360		2x6	DUAL BRKR		2x NZMH2-AF30-NA									4	21-06-3563-G	
12	1	20/20kW	30/30	360/360		2x6	DUAL BRKR		2x NZMH2-AF30-NA									4	21-06-3563-G	
13	1																	4		
14	1	40	50	600	6	4	VFD		NZMH2-AF90-NA						150	1.5	SEE DRAWING FOR PARTS INFORMATION	12	21-06-3563-E	
15	1						SPACE											4		
16	1	10/10kW	15/15	350/350		2x6	DUAL BRKR		2x NZMH2-AF15-NA									4	21-06-3563-G	
17	1																	4		
18	1	40	50	600	6	4	VFD		NZMH2-AF90-NA						150	1.5	SEE DRAWING FOR PARTS INFORMATION	12	21-06-3563-E	
19	1	3	4.8	350	10	10	VFD		NZMH2-AF15-NA								SEE DRAWING FOR PARTS INFORMATION	12	21-06-3563-C	
20	1	7.5	11	350	10	10	VFD		NZMH2-AF15-NA								SEE DRAWING FOR PARTS INFORMATION	12	21-06-3563-D	
21	1	3	4.8	350	10	10	VFD		NZMH2-AF15-NA								SEE DRAWING FOR PARTS INFORMATION	12	21-06-3563-C	
22	1	7.5	11	350	10	10	VFD		NZMH2-AF15-NA								SEE DRAWING FOR PARTS INFORMATION	12	21-06-3563-D	
23	1	9kW	15	350	10	10	BRKR CONTACTOR	M25-10/22	NZMH2-AF15-NA			1	1		50	0.5	SEE DRAWING FOR PARTS INFORMATION	4	21-06-3563-B	
24	1	9kW	15	350	10	10	BRKR CONTACTOR	M25-10/22	NZMH2-AF15-NA			1	1		50	0.5	SEE DRAWING FOR PARTS INFORMATION	4	21-06-3563-B	
25	1	20/20kW	30/30	360/360		2x6	DUAL BRKR		2x NZMH2-AF30-NA									4	21-06-3563-G	
26	1		15/60	350/630		2x6	DUAL BRKR		NZMH2-AF15-NA/AF60-NA									4	21-06-3563-G	
27	1						SPACE											4		
28	1						SPACE											4		
29	1						LTG PNL										SEE DRAWING FOR PARTS INFORMATION	14	21-06-3563-F	
30	1		70	800			XFMR/BRKR		NZMH2-AF70-NA								SEE DRAWING FOR PARTS INFORMATION	10	21-06-3563-F	
31	1						PLC PANEL											24		
32	1						PLC PANEL											24		
33	1						PLC PANEL											24		

Wiremarkers: Yes ■ No □
Wiremarker Type: PVC □ Heatshrink ■
Control Wire Size: 16AWG □ 14AWG ■
Tin Plated Control: Yes ■ No □

Rev.	Description	Date	Appr.
1	UPDATED AS BUILT	JUL 17 06	DRJ

DRAWN: AH
DATE: MAY 17 06
APPR:

Cust. order #
MCC NOTES
CLEARWATER GAS PLANT (MCC-300)
FORT ENERGY CORP.

Moeller order # 21-06-3563
MOELLER CALGARY BRANCH
Dwg # 3WD-463-21-06-3563-1A

Branch to fill in below:

Sect.:	Structure Type:	Horizontal Bus	Vertical Bus	Horizontal Gnd. Bus (NHG1-1/4x1/4)
F, G, H	NP3-050x050+VW	H25-65PV050	NV04-65	50/65P050-B
I	CORNER SECTION			
J	NP3-075x050	H25-65P075		50/65P075-BT

Unit	Qty.	Drawer Type	Fixed Mounting Plate Type	Door Type	Hole Code	"PP" Code
19	1	DUR12		NDP038-12+P		
20	1	DUR12		NDP038-12+P		
21	1	DUR12		NDP038-12+P		
22	1	DUR12		NDP038-12+P		
23	1	DUR4		NDP038-4+P		184
24	1	DUR4		NDP038-4+P		184
25	1	DUR4		NDP038-4+P		184
26	1	DUR4		NDP038-4+P		184
27	1			NDP038-4+P		
28	1			NDP038-4+P		
29	1		FPP075-14W-SP	NDP075-14+P		
30	1		FPP075-3W	NDP075-10+P		

Busbars: Tin-plated Copper (Standard)

Main Bus: 800A ☐ 1200A ☐ 1600A ☐ 2000A ☐ 2500A ■ 3000A ☐

Vertical Bus: Std. 400A ■ 600A ☐ | Ground Bus: 800A

Short Circuit Bracing: 65kA | Neutral Bus: N/A

Incoming Entry: Top ☐ Bottom ■ | Incoming Section: A No./Phase: 8

Outgoing Lines: Top ☐ Bottom ☐ | Cable ■ Size: 500MCM Al ☐ Cu ■

Unit Mounting: Front Only | Enclosure Type: Eemac 1A

Finish: Standard Grey | Back Access: Yes ☐ No ■

Notes - Factory Only:

- SECTION 'J' c/w TOC #3465 & TR-P075x050
- UNIT #29 DOOR c/w KL3

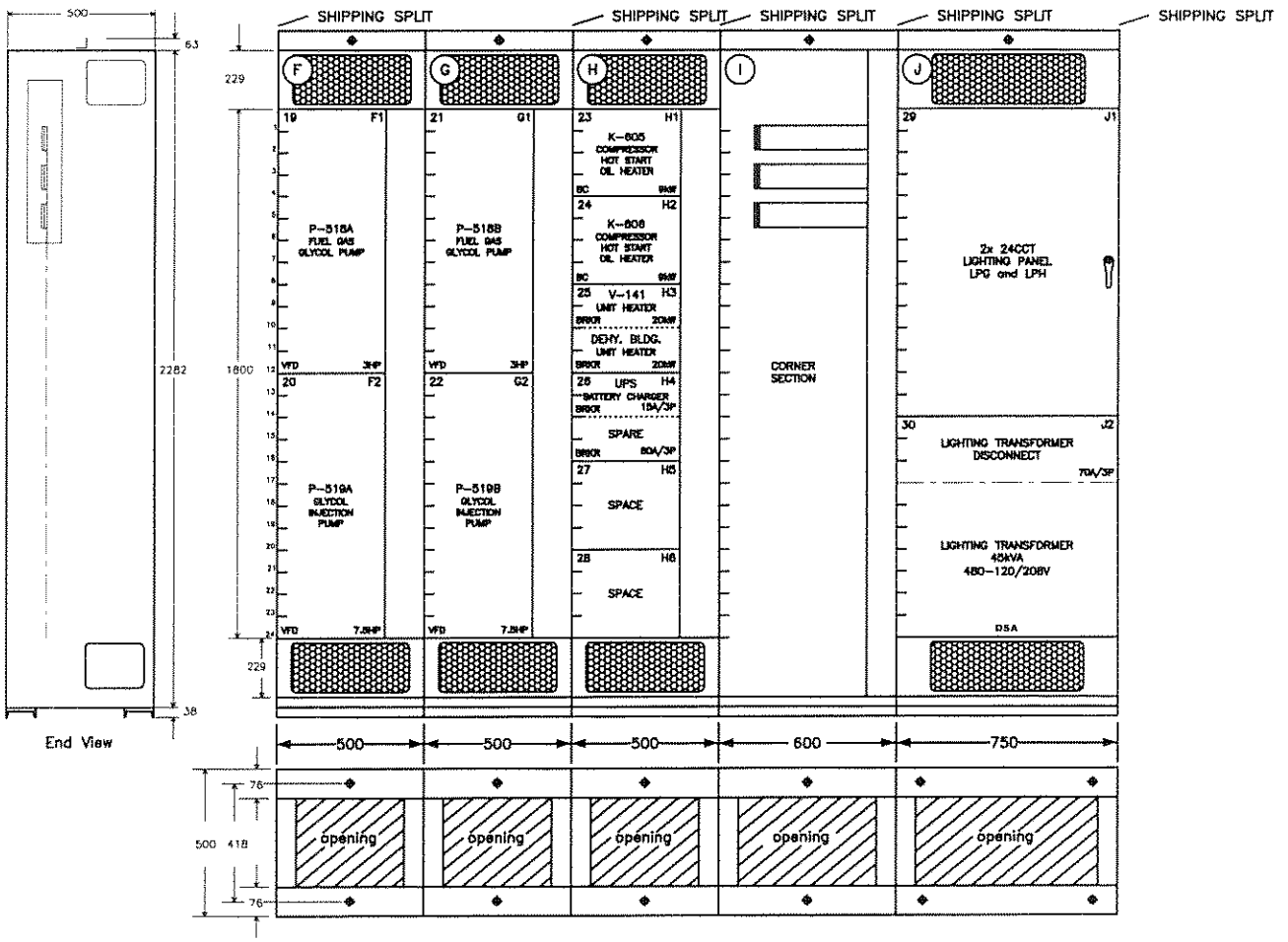

Notes:

- PHASE IDENTIFICATION ARE REQUIRED

PROJECT CLEARWATER GAS PLANT (MCC-300)
CUSTOMER FORT ENERGY CORP.
LOCATION LSD 11-17-63-06 W5M CUST ORDER #
QUOTATION Q21-06-0180 MOELLER ORDER # 21-06-3563

Wiring: Class: 1 Type: B Coil volts: 120
Line volts: 480 Phase: 3 Wire: 3 Hertz: 60

Rev.	Description	Date	Appr.
2	UNITS #19, #20, #21 & #22 TAGS UPDATED	JUN 28 06	AH
1	UPDATED	JUN 16 06	DRJ

DRAWN AH | CHECKED | DATE MAY 16 06 | APPROVED

MOTOR CONTROL CENTRE MCC 3000

MOELLER CALGARY BRANCH

Dwg # 3WD-463-21-06-3563-2

Branch to fill in below:

Sect.:	Structure Type:	Horizontal Bus	Vertical Bus	Horizontal Gnd. Bus (NHG1-1/4x1/4)
F, G, H	NP3-050x050+VW	H25-65PV050	NV04-65	50/65P050-B
I	CORNER SECTION			
J	NP3-075x050	H25-65P075		50/65P075-BT

Unit	Qty.	Drawer Type	Fixed Mounting Plate Type	Door Type	Hole Code	"PP" Code
19	1	DUR12		NDP038-12+P		
20	1	DUR12		NDP038-12+P		
21	1	DUR12		NDP038-12+P		
22	1	DUR12		NDP038-12+P		
23	1	DUR4		NDP038-4+P		184
24	1	DUR4		NDP038-4+P		184
25	1	DUR4		NDP038-4+P		184
26	1	DUR4		NDP038-4+P		184
27	1			NDP038-4+P		
28	1			NDP038-4+P		
29	1		FPP075-14W-SP	NDP075-14+P		
30	1		FPP075-3W	NDP075-10+P		

Busbars: Tin-plated Copper (Standard)

Main Bus: 800A ☐ 1200A ☐ 1600A ☐ 2000A ☐ 2500A ■ 3000A ☐

Vertical Bus: Std. 400A ■ 600A ☐ | Ground Bus: 800A

Short Circuit Bracing: 65kA | Neutral Bus: N/A

Incoming Entry: Top ☐ Bottom ■ | Incoming Section: A No./Phase: 8

Outgoing Lines: Top ☐ Bottom ☐ | Cable ■ Size: 500MCM Al ☐ Cu ■

Unit Mounting: Front Only | Enclosure Type: Eemac 1A

Finish: Standard Grey | Back Acess: Yes ☐ No ■

Notes – Factory Only:

– SECTION 'J' c/w TOC #3465 & TR-P075x050

– UNIT #29 DOOR c/w KL3

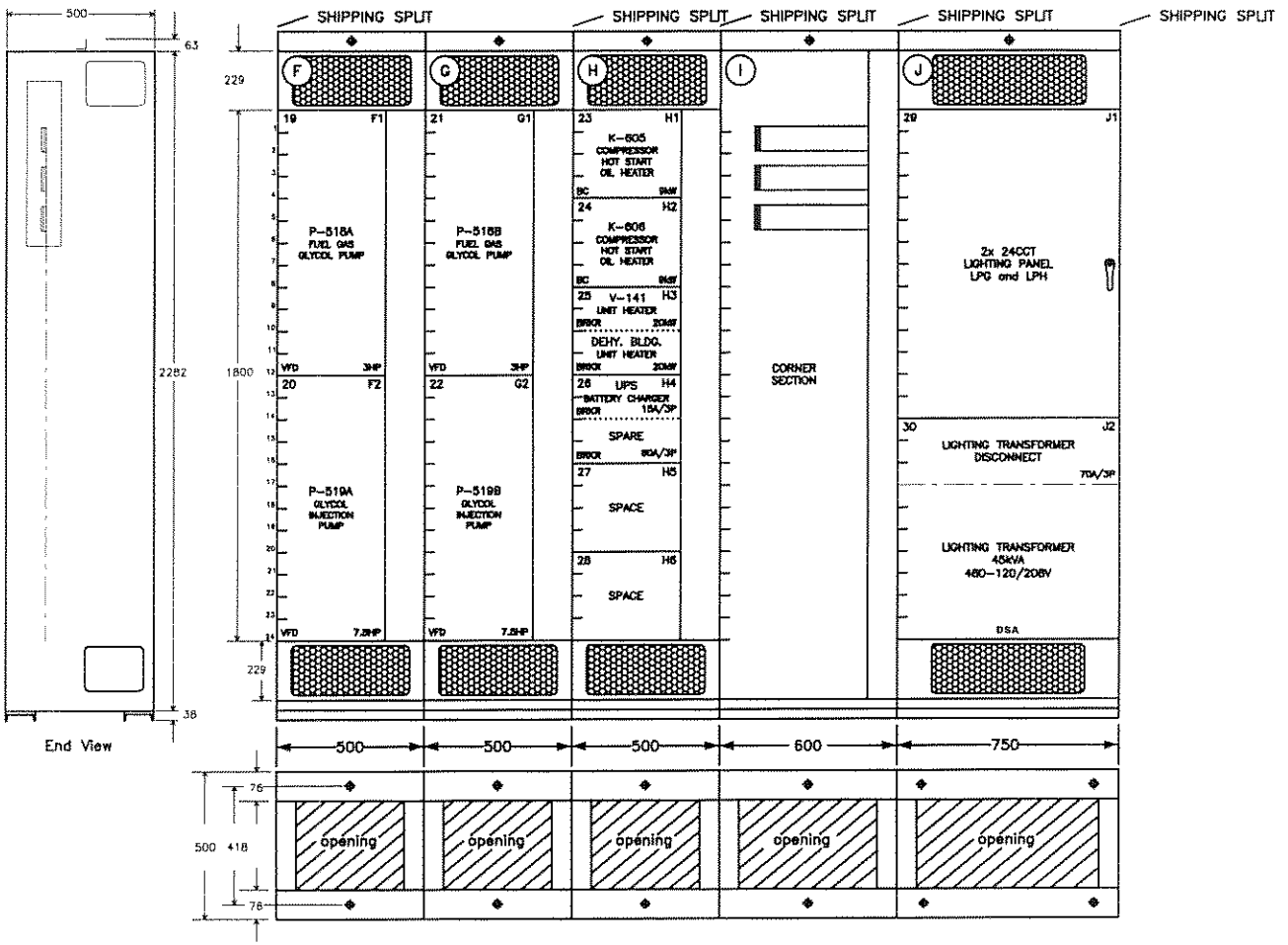

Notes:

– PHASE IDENTIFICATION ARE REQUIRED

PROJECT CLEARWATER GAS PLANT (MCC-300)
CUSTOMER FORT ENERGY CORP.
LOCATION LSD 11-17-63-06 W5M CUST ORDER #
QUOTATION Q21-06-0180 MOELLER ORDER # 21-06-3563

Wiring: Class: 1 Type: B Coil volts: 120
Line volts: 480 Phase: 3 Wire: 3 Hertz: 60

Rev.	Description	Date	Appr.
2	UNITS #19, #20, #21 & #22 TAGS UPDATED	JUN 28 06	AH
1	UPDATED	JUN 16 06	DRJ

DRAWN AH | CHECKED | DATE MAY 16 06 | APPROVED

MOTOR CONTROL CENTRE MCC 3000

MOELLER CALGARY BRANCH

Dwg # 3WD-463-21-06-3563-2

Branch to fill in below:

Sect.:	Structure Type:	Horizontal Bus	Vertical Bus	Horizontal Gnd. Bus (NHG1-1/4x1/4)
K, L, M	NF3-100x050	H25-65F100		50/65F100-B

Unit	Qty.	Drawer Type	Fixed Mounting Plate Type	Door Type	Hole Code	"PP" Code
31	1		FPF100-24W-SP	NDF100-24+P		
32	1		FPF100-24W-SP	NDF100-24+P		
33	1		FPF100-24W-SP	NDF100-24+P		

Busbars: Tin-plated Copper (Standard)

Main Bus: 800A☐ 1200A☐ 1600A☐ 2000A☐ 2500A■ 3000A☐

Vertical Bus: Std. 400A☐ 600A☐ | Ground Bus: 400A

Short Circuit Bracing: 65kA | Neutral Bus: N/A

Incoming Entry: Top☐ Bottom■ | Incoming Section: A No./Phase: B

Outgoing Lines: Top☐ Bottom☐ | Cable■ Size: 500MCM Al☐ Cu■

Unit Mounting: Front Only | Enclosure Type: Eemac 1A

Finish: Standard Grey | Back Acess: Yes☐ No■

Notes – Factory Only:

– UNITS #31, #32 & #33 DOORS c/w KL3

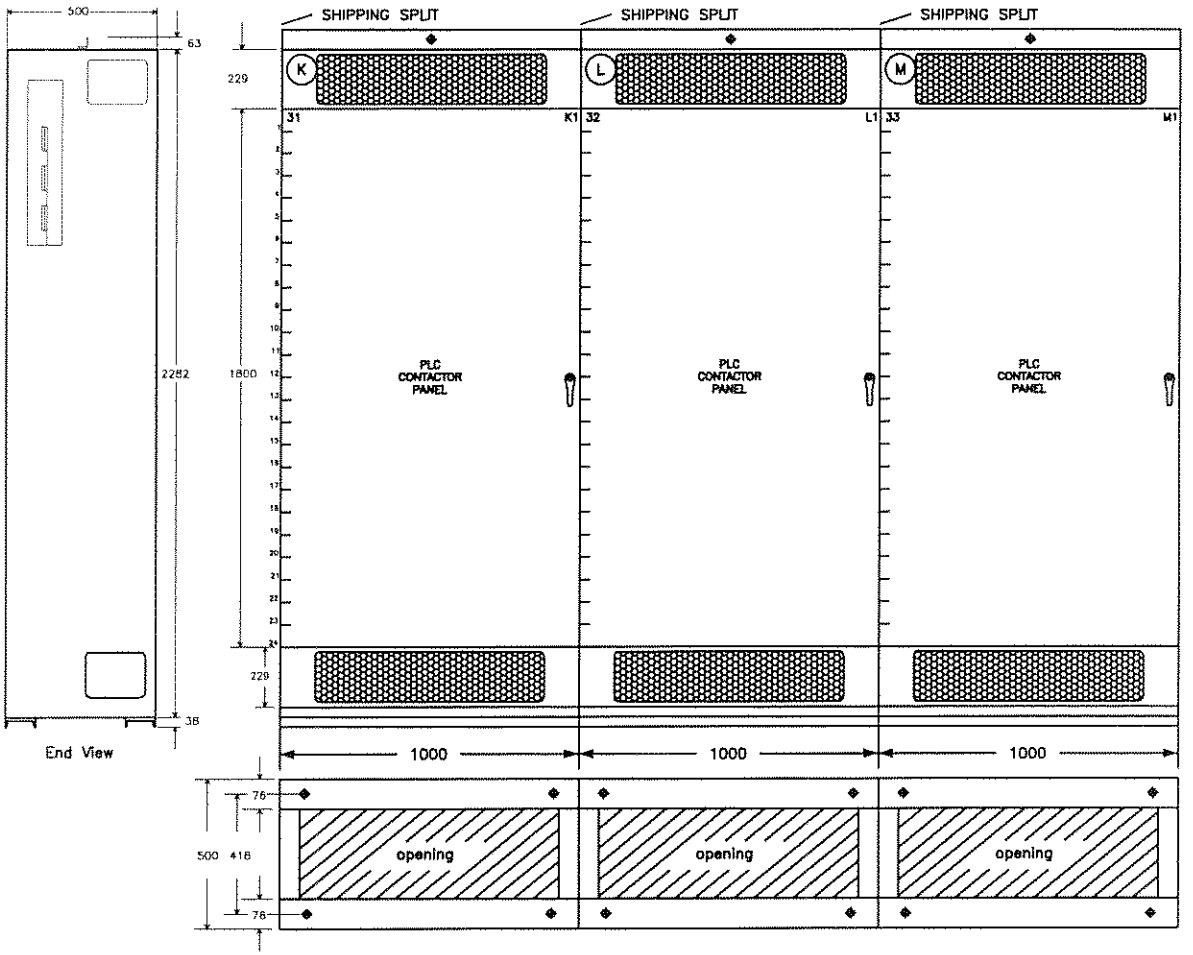

Notes:

– PHASE IDENTIFICATION ARE REQUIRED

PROJECT CLEARWATER GAS PLANT (MCC-300)
CUSTOMER FORT ENERGY CORP.
LOCATION LSD 11-17-63-06 W5M CUST ORDER #
QUOTATION Q21-06-0180 MOELLER ORDER # 21-06-3563

Wiring: Class: 1 Type: B Coil volts: 120
Line volts: 480 Phase: 3 Wire: 3 Hertz: 60

Rev.	Description	Date	Appr.

DRAWN	CHECKED		
AH		MOTOR CONTROL CENTRE MCC 3000	MOELLER CALGARY BRANCH
DATE MAY 16 06	APPROVED		Dwg # 3WD-463-21-06-3563-3

Branch to fill in below:

Sect.:	Structure Type:	Horizontal Bus	Vertical Bus	Horizontal Gnd. Bus (NHG1-1/4x1/4)
N	NF3-100x050			50/65F100-B

Unit	Qty.	Drawer Type	Fixed Mounting Plate Type	Door Type	Hole Code	"PP" Code
34	1		FPF100-24W-SP	NDF100-24+P		

Busbars: Tin-plated Copper (Standard)

Main Bus: 800A☐ 1200A☐ 1600A☐ 2000A☐ 2500A 3000A☐

Vertical Bus: Std. 400A☐ 600A☐ | Ground Bus: 400A

Short Circuit Bracing: 65kA | Neutral Bus: N/A

Incoming Entry: Top☐ Bottom■ | Incoming Section: A No./Phase: 8

Outgoing Lines: Top☐ Bottom☐ | Cable■ Size: 500MCM Al☐ Cu■

Unit Mounting: Front Only | Enclosure Type: Eemac 1A

Finish: Standard Grey | Back Acess: Yes☐ No■

Notes – Factory Only:

- RECESSED 24MOD MTG. PLATE IN ALL SECTION'S AT 405mm DEPTH
- ALL DOOR'S c/w KL3 ON THE LEFT HAND SIDE
- ALL DOOR HINGES TO BE ON THE RIGHT HAND SIDE
- ALL SECTION'S TOP & BOTTOM HORIZONTAL WIREWAY COVER ARE VENTILATED
- ALL SECTION'S c/w TOC #5472 (Right Side and Left Side mtg. plates)

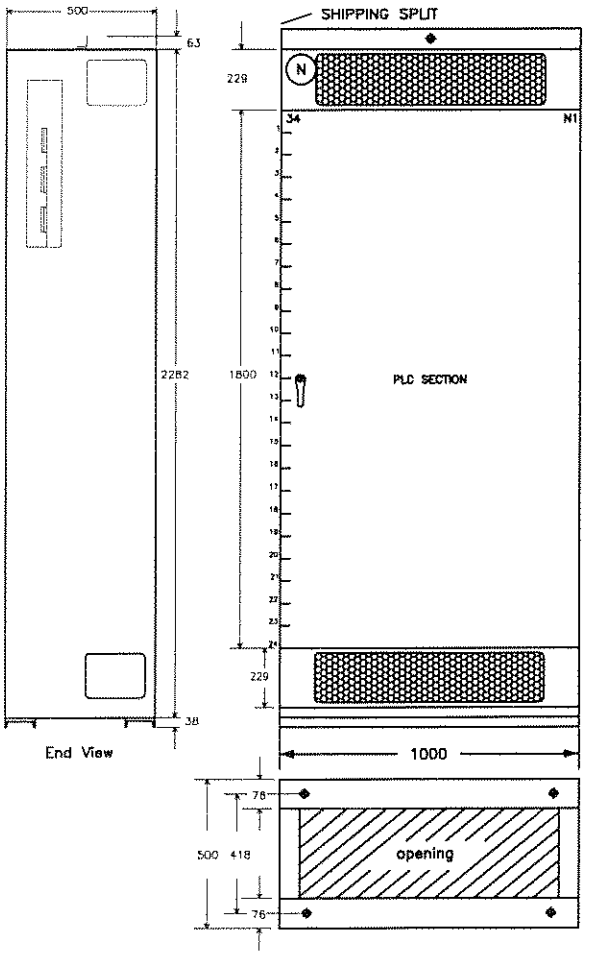

Notes:

- PHASE IDENTIFICATION ARE REQUIRED

PROJECT CLEARWATER GAS PLANT (PLC)
CUSTOMER FORT ENERGY CORP.
LOCATION LSD 11-17-63-06 W5M CUST ORDER #
QUOTATION Q21-06-0180 MOELLER ORDER # 21-06-3563

Wiring: Class: 1 Type: B Coil volts: 120
Line volts: 480 Phase: 3 Wire: 3 Hertz: 60

Rev.	Description	Date	Appr.
1	ADDED UNIT NUMBER	JUN 28 06	AH

DRAWN	CHECKED	MOTOR CONTROL CENTRE MCC 3000	MOELLER CALGARY BRANCH
DJ			
DATE MAY 16 06	APPROVED		Dwg # 3WD-463-21-06-3563-4

Branch to fill in below:

Sect.:	Structure Type:	Horizontal Bus	Vertical Bus	Horizontal Gnd. Bus (NHG1-1/4x1/4)
A	NP3-050x050+PWB	H25-65PV050	NV04-65	50/65P050-B

Unit	Qty.	Drawer Type	Fixed Mounting Plate Type	Door Type	Hole Code	"PP" Code
1	1		FPP050-12W-SP	NDP050-12+P		
2	1			NDP038-4+P		
3	1			NDP038-4+P		
4	1			NDP038-4+P		

Busbars: Tin-plated Copper (Standard)

Main Bus: 800A☐ 1200A☐ 1600A☐ 2000A☐ 2500A■ 3000A☐

Vertical Bus: Std. 400A■ 600A☐ | Ground Bus: 400A

Short Circuit Bracing: 65kA | Neutral Bus: N/A

Incoming Entry: Top☐ Bottom☐ | Incoming Section: No./Phase:

Outgoing Lines: Top☐ Bottom☐ | Cable☐ Size: Al☐ Cu☐

Unit Mounting: Front Only | Enclosure Type: Eemac 1A

Finish: Standard Grey | Back Access: Yes☐ No■

Notes – Factory Only:

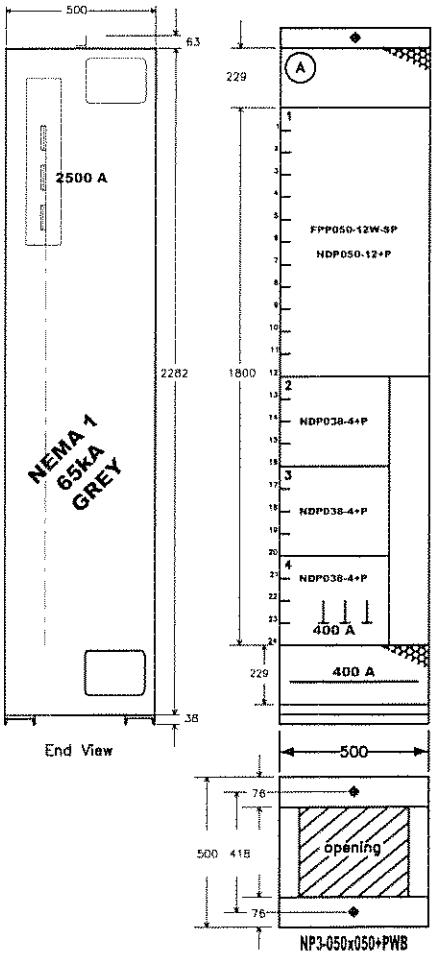

Notes:
- PHASE IDENTIFICATION ARE REQUIRED
- TO BE BOLTED ON EXISTING MCC c/w BUS COUPLERS

PROJECT CLEARWATER GAS PLANT (MCC-100) ADD SECTION
CUSTOMER FORT ENERGY CORP.
LOCATION LSD 11-17-63-06 W5M CUST ORDER #
QUOTATION Q21-06-0180 MOELLER ORDER # 21-06-3563

Wiring: Class: 1 Type: B Coil volts: 120
Line volts: 480 Phase: 3 Wire: 3 Hertz: 60

Rev.	Description	Date	Appr.

DRAWN	CHECKED		
AH		MOTOR CONTROL CENTRE MCC 3000	MOELLER CALGARY BRANCH
DATE MAY 17 06	APPROVED		Dwg # 3WD-463-21-06-3563-10

Unit No.	Qty.	HP	FLA	Mag trip setting (A)	Power wire size (awg)	Power plug MPA	Starter Type	Catalogue Number: Contactor DIL	Catalogue Number: Circuit Protective Device	Catalogue Number: Overload Relay	Pilot Devices: Pushbuttons or Selector Switch	Pilot Devices: Lights R	Pilot Devices: Lights G	Pilot Devices: Lights SP	Control Transformer VA	Control Transformer Amps	Notes	Unit Height (mod)	Unit Wiring Diagram 3wd-463-	Unit Layout Drawing No.
1	1		1200	14400			FEEDER BRKR		ABB S7H1200BW									12	21-06-3563-G	
2	1						SPACE											4		
3	1						SPACE											4		
4	1						SPACE											4		

Wiremarkers: Yes ■ No □
Wiremarker Type: PVC □ Heatshrink ■
Control Wire Size: 16AWG □ 14AWG ■
Tin Plated Control: Yes ■ No □

Rev.	Description	Date	Appr.

DRAWN AH
DATE MAY 17 06
APPR

Cust. order #
MCC NOTES
CLEARWATER GAS PLANT (MCC-100)
FORT ENERGY CORP.

Moeller order # 21-06-3563
MOELLER CALGARY BRANCH
Dwg # 3WD-463-21-06-3563-10A

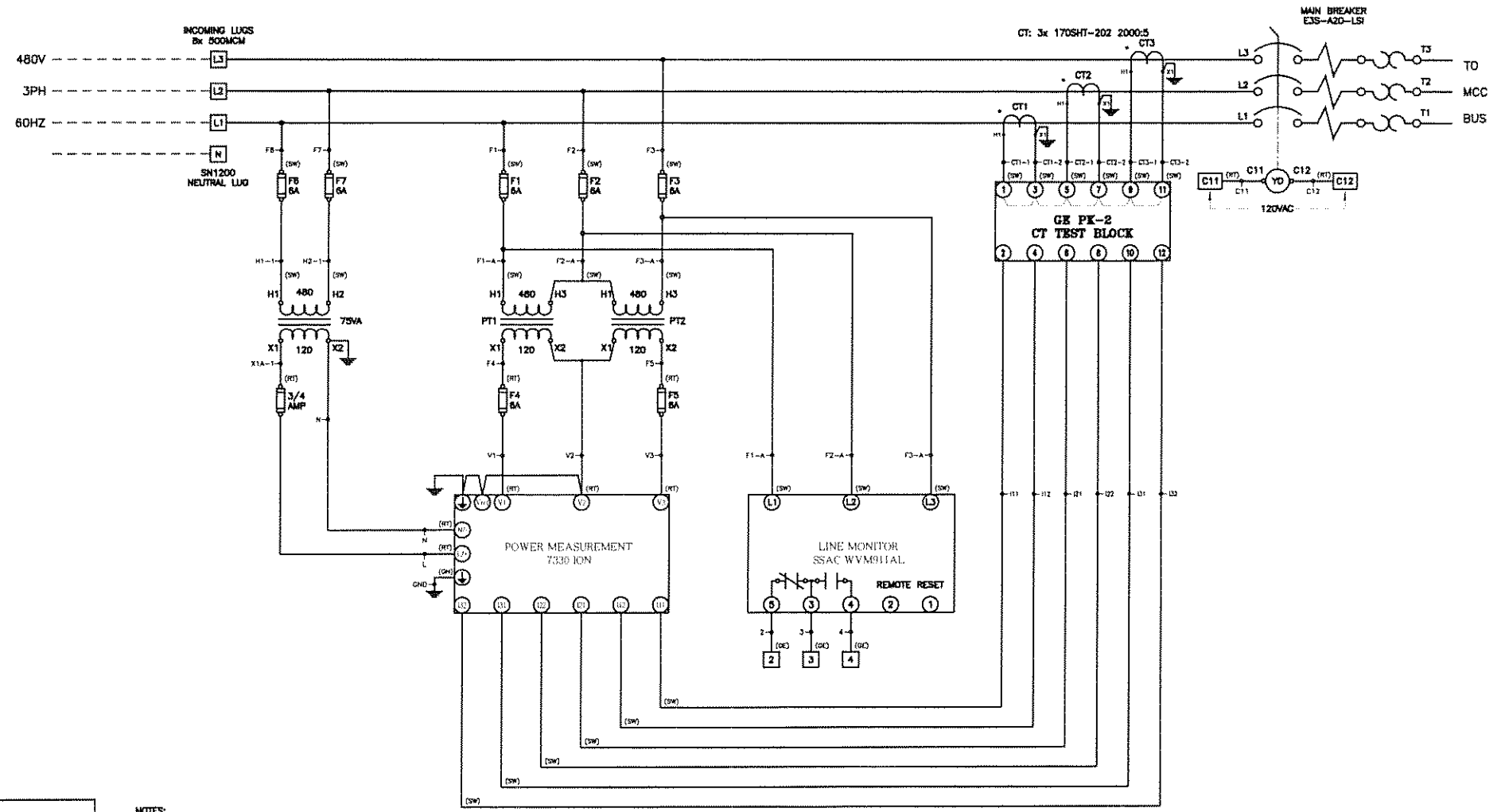

LEGEND:
SOLID LINE – CUBICLE/PANEL WIRING
DASHDOT LINE – INTERCUBICLE WIRING
DASHED LINE – FIELD WIRING
SW – BLACK
RT – RED
GN – GREEN
OE – YELLOW (AMBER)
BL – BLUE
WS – WHITE

NOTES:
- NEUTRAL LUG AND ZSCT TO BE LOCATED IN MAIN BREAKER COMPARTMENT
- CONTROL TERMINALS ARE SAK BEN TYPE c/w 4 SPARE
- ALL CT's SECONDARY WIRES ARE #10AWG

Rev.	Description	Date	Appr.	Rev.	Description	Date	Appr.

DRAWN: AH
DATE: MAY 17 06
APPR:

Cust. order #

MAIN BREAKER and METERING
CLEARWATER GAS PLANT
FORT ENERGY CORP.

Moeller Order # 21-06-3563

MOELLER CALGARY BRANCH

Dwg # 3WD-463-21-06-3563-A

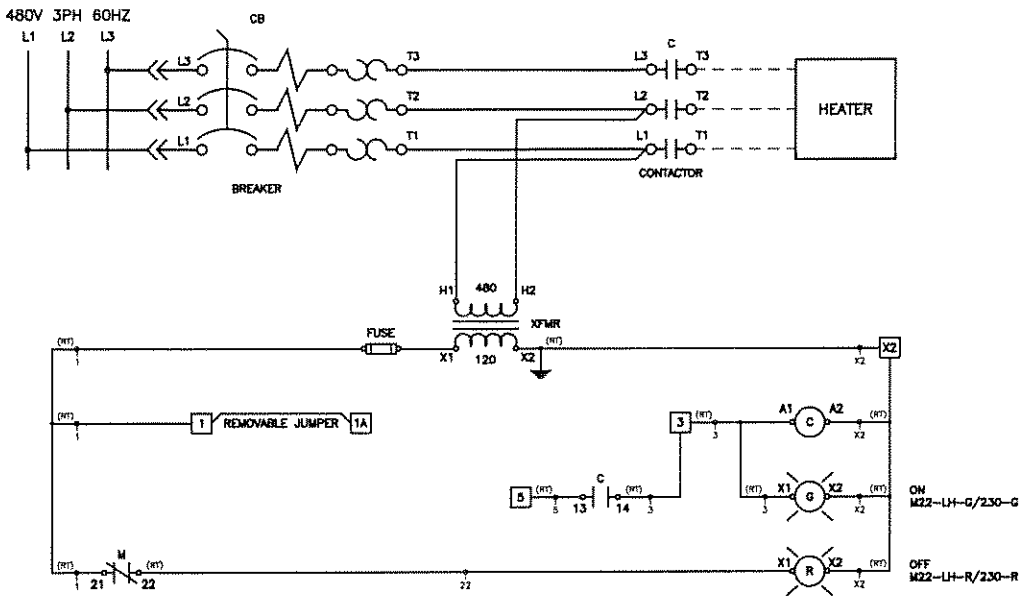

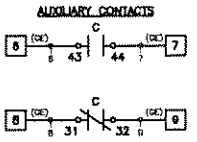

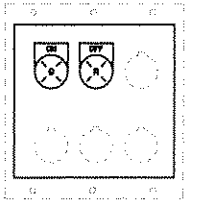

MCC STARTER PP PANEL LAYOUT

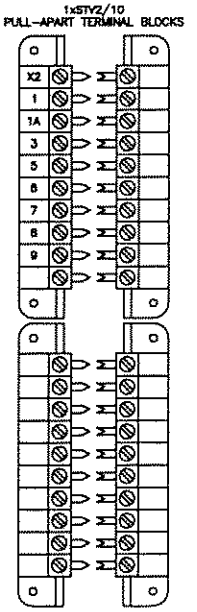

LEGEND:
SOLID LINE - CUBICLE/PANEL WIRING
DASHDOT LINE - INTERCUBICLE WIRING
DASHED LINE - FIELD WIRING
SW - BLACK
RT - RED
GN - GREEN
GE - YELLOW (AMBER)
BL - BLUE
WB - WHITE

* NOTE: AP...-STV2 PLATES NEEDS TO BE LOOSE IN VERTICAL WIREWAY *

Rev.	Description	Date	Appr.	Rev.	Description	Date	Appr.

DRAWN: AH
DATE: MAY 17 06
APPR:

Cust. order #
BREAKER CONTACTOR
CLEARWATER GAS PLANT
FORT ENERGY CORP.

Moeller Order # 21-06-3563
MOELLER CALGARY BRANCH
Dwg # 3WD-463-21-06-3563-B

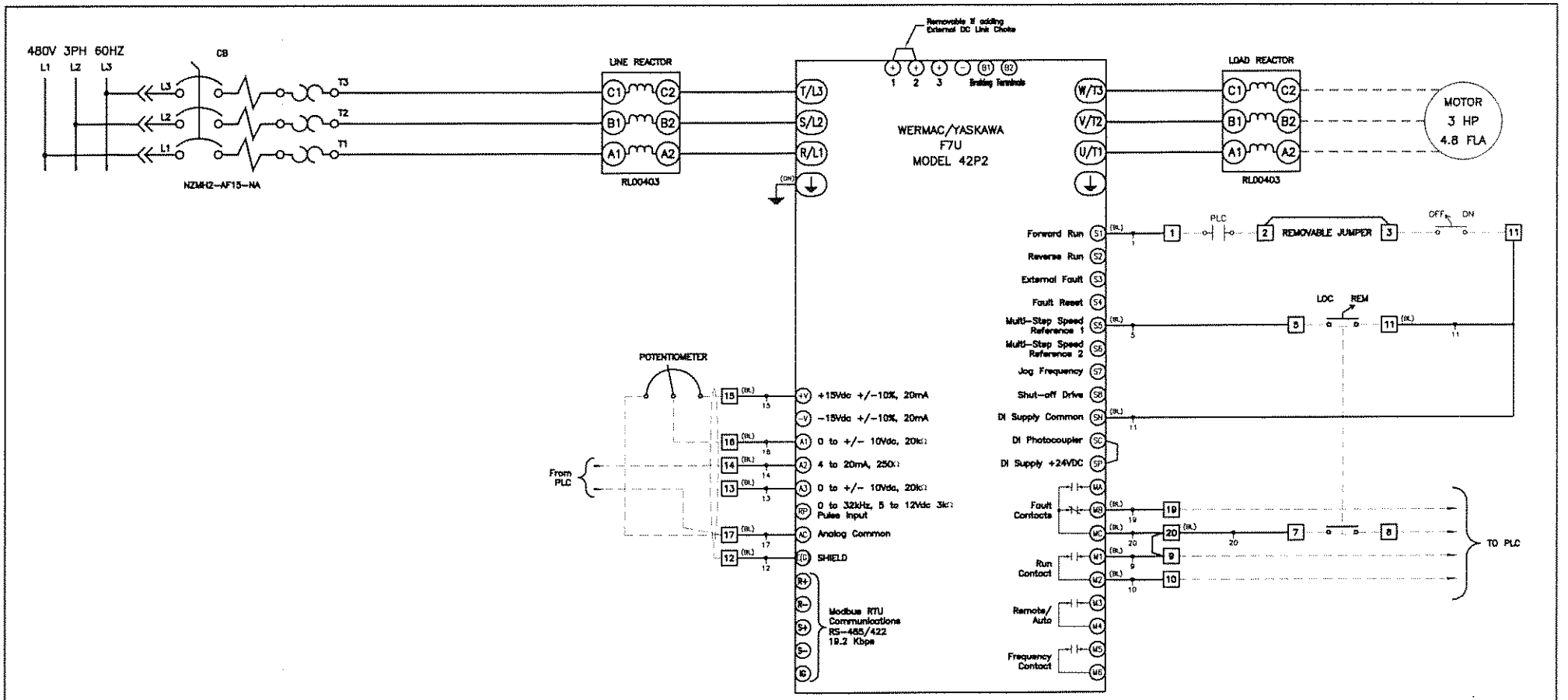

LEGEND:
SOLID LINE - CUBICLE/PANEL WIRING
DASHEDT LINE - INTERCUBICLE WIRING
DASHED LINE - FIELD WIRING
BK - BLACK
RT - RED
GN - GREEN
OE - YELLOW (AMBER)
BL - BLUE
WS - WHITE

NOTE:
- STV2/10 CONTROL TERMINALS

* NOTE: AP..-STV2 PLATES NEEDS TO BE LOOSE IN VERTICAL WIREWAY *

Rev.	Description	Date	Appr.	Rev.	Description	Date	Appr.

DRAWN: AH
DATE: MAY 17 06
APPR:

Cust. order #

3HP VARIABLE FREQUENCY DRIVE
CLEARWATER GAS PLANT
FORT ENERGY CORP.

Moeller Order # 21-06-3563

MOELLER CALGARY BRANCH

Dwg # 3WD-483-21-06-3563-C

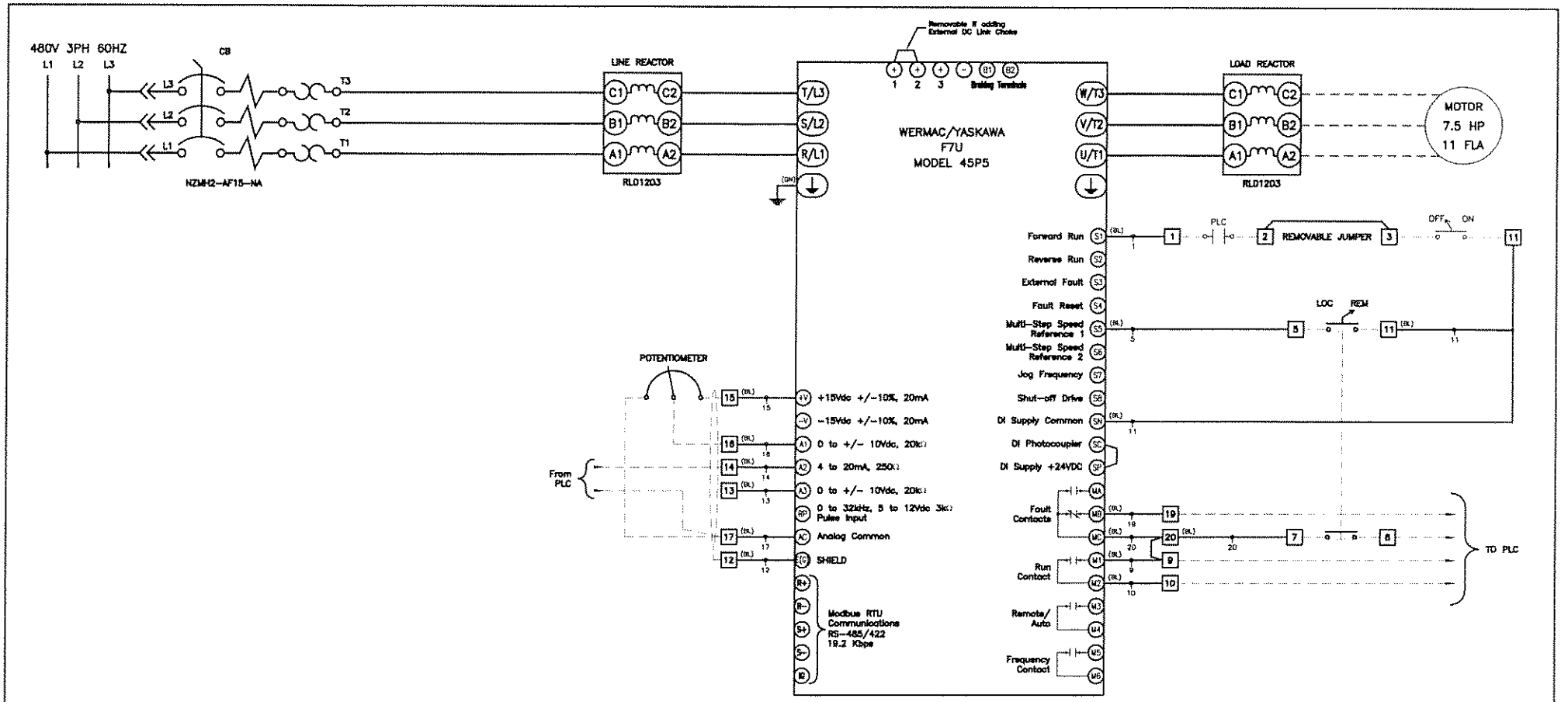

LEGEND:
SOLID LINE - CUBICLE/PANEL WIRING
DASHDOT LINE - INTERCUBICLE WIRING
DASHED LINE - FIELD WIRING
SW - BLACK
RT - RED
GN - GREEN
OE - YELLOW (AMBER)
BL - BLUE
WB - WHITE

NOTE:
- STV2/10 CONTROL TERMINALS

* NOTE: AP...-STV2 PLATES NEEDS TO BE LOOSE IN VERTICAL WIREWAY *

Rev.	Description	Date	Appr.	Rev.	Description	Date	Appr.

DRAWN: AH
DATE: MAY 17 06
APPR:

Cust. order #
7.5HP VARIABLE FREQUENCY DRIVE
CLEARWATER GAS PLANT
FORT ENERGY CORP.

Moeller Order # 21-06-3563
MOELLER
CALGARY BRANCH
Dwg # 3WD-463-21-06-3563-D

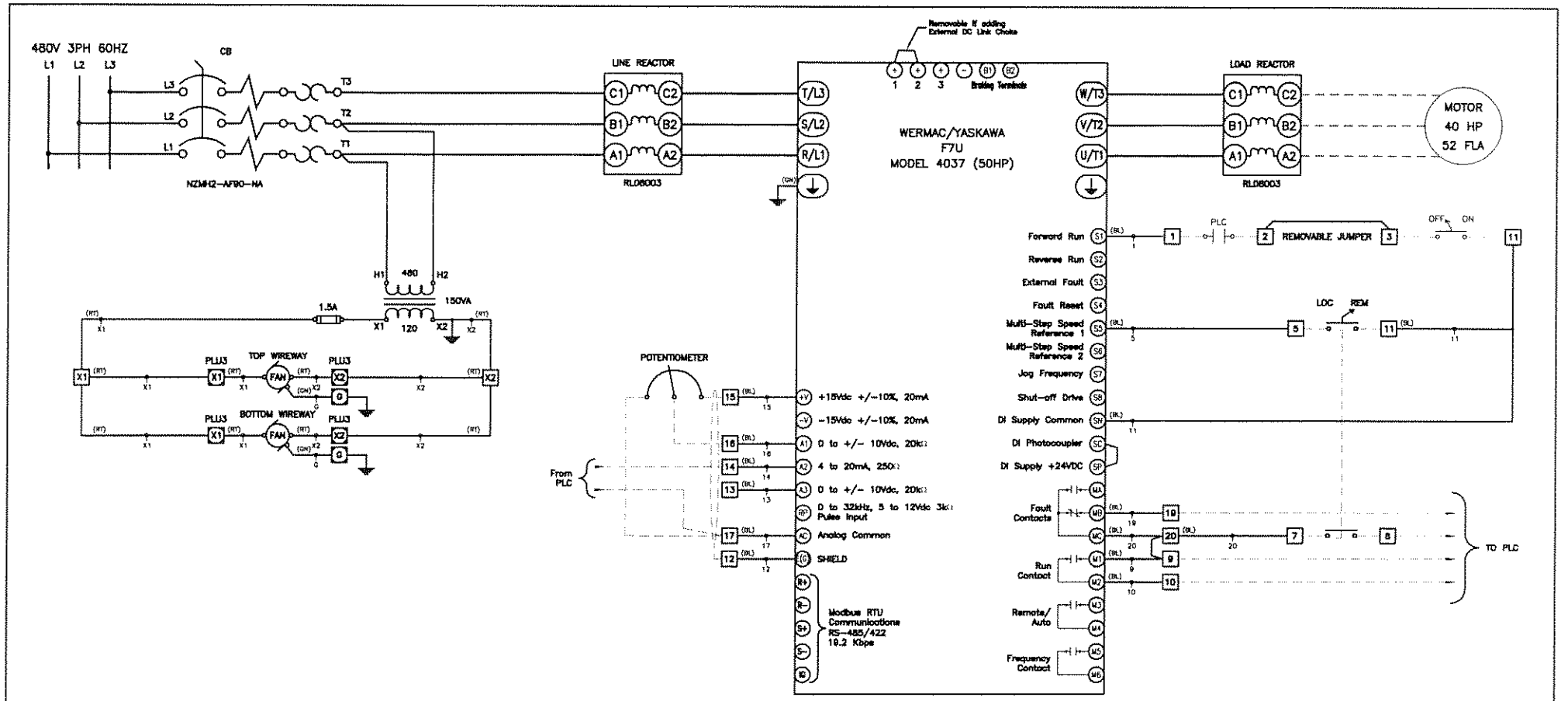

LEGENDA:
SOLID LINE – CUBICLE/PANEL WIRING
DASHDOT LINE – INTERCUBICLE WIRING
DASHED LINE – FIELD WIRING
SW – BLACK
RT – RED
GN – GREEN
GE – YELLOW (AMBER)
BL – BLUE
WS – WHITE

NOTE:
– SAK GEN CONTROL TERMINALS c/w 4 SPARE

Rev.	Description	Date	Appr.	Rev.	Description	Date	Appr.
				1	CHANGED HP FROM 40 TO 50	JUN 16 05	DRJ

DRAWN: AH
DATE: MAY 17 06
APPR:

Cust. order #
30HP VARIABLE FREQUENCY DRIVE
CLEARWATER GAS PLANT
FORT ENERGY CORP.

Moeller Order # 21-06-3563
MOELLER CALGARY BRANCH
Dwg # 3WD-463-21-06-3563-E

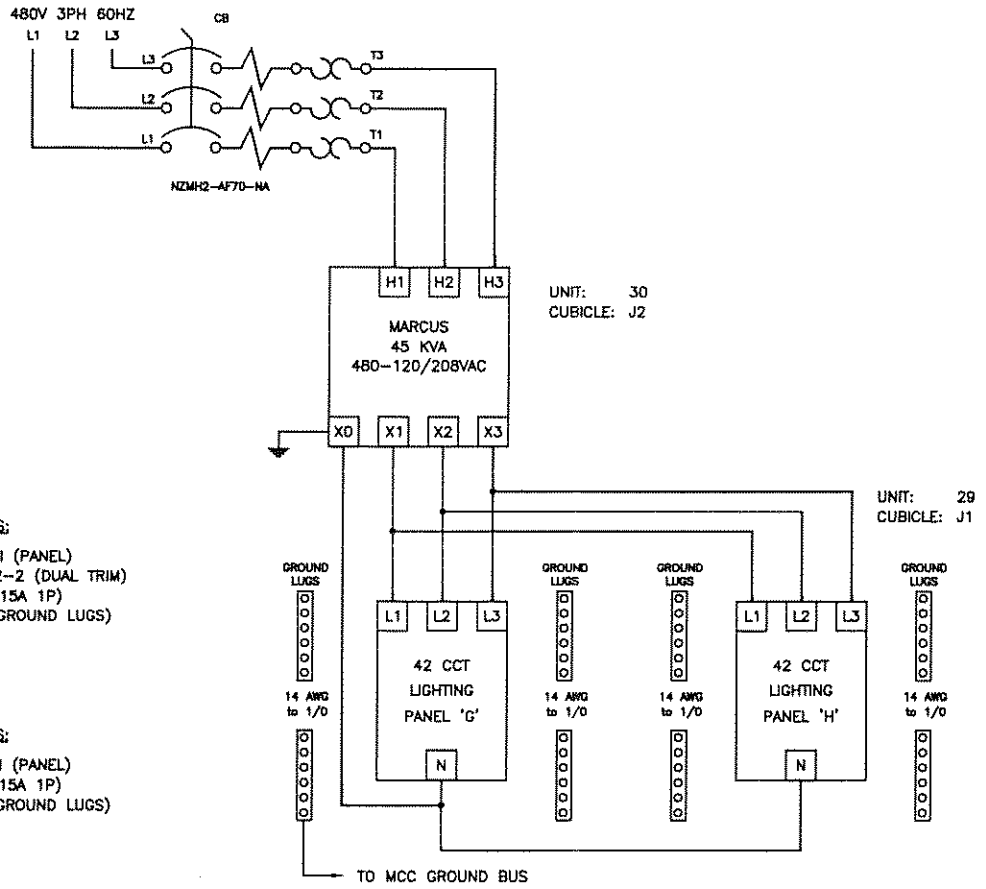

PANEL "G" PARTS:

1 – P1AL4A2421 (PANEL)
1 – TOC #5942-2 (DUAL TRIM)
42 – BAB1015 (15A 1P)
4 – CO4.380 (GROUND LUGS)

PANEL "H" PARTS:

1 – P1AL4A2421 (PANEL)
42 – BAB1015 (15A 1P)
4 – CO4.380 (GROUND LUGS)

NOTE: ONE COPPER GROUND WIRE #6 AWG
IS CONNECTED FROM LIGHTING PANEL TO MCC GROUND BUS

XX* – GFCI BREAKERS

LEGEND:
SOLID LINE – CUBICLE/PANEL WIRING
DASHDOT LINE – INTERCUBICLE WIRING
DASHED LINE – FIELD WIRING
SW – BLACK
RT – RED
GN – GREEN
OE – YELLOW (AMBER)
BL – BLUE
WS – WHITE

Rev.	Description	Date	Appr.	Rev.	Description	Date	Appr.

DRAWN: AH
DATE: MAY 17 06
APPR:

Cust. order #

LIGHTING PANEL POWER WIRING
CLEARWATER GAS PLANT
FORT ENERGY CORP.

Moeller Order # 21-06-3563

MOELLER CALGARY BRANCH

Dwg # 3WD-463-21-06-3563-F (1)

PANEL SCHEDULE "C"

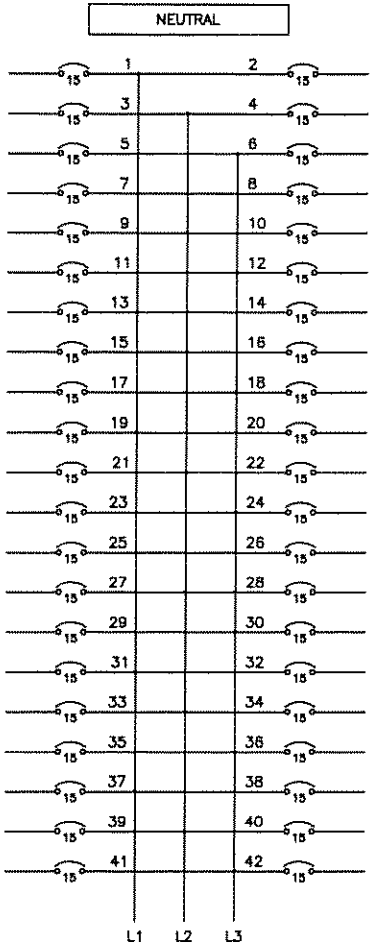

PANEL SCHEDULE "D"

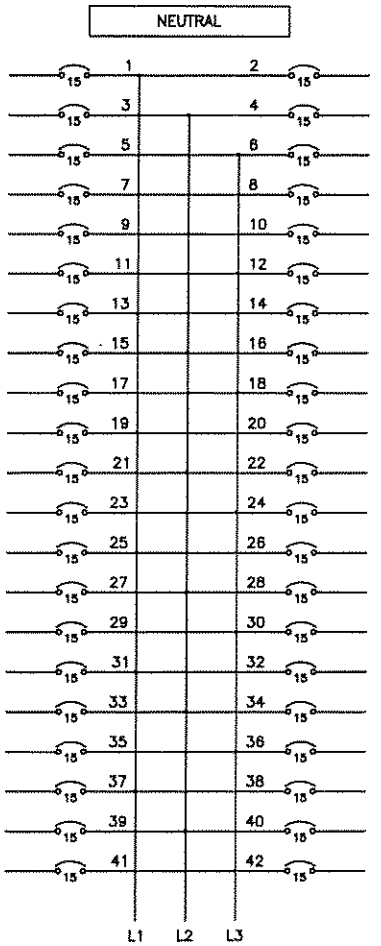

LEGEND:
SOLID LINE – CUBICLE/PANEL WIRING
DASHDOT LINE – INTERCUBICLE WIRING
DASHED LINE – FIELD WIRING
BK – BLACK
RT – RED
GN – GREEN
OE – YELLOW (AMBER)
BL – BLUE
WS – WHITE

XX* – GFCI BREAKERS

Rev.	Description	Date	Appr.	Rev.	Description	Date	Appr.

DRAWN: AH
DATE: MAY 17 06
APPR:

Cust. order #
LP–G & LP–H PANEL SCHEDULE
CLEARWATER GAS PLANT
FORT ENERGY CORP.

Moeller Order # 21–06–3563
MOELLER CALGARY BRANCH
Dwg # 3WD–463–21–06–3563–F (2)

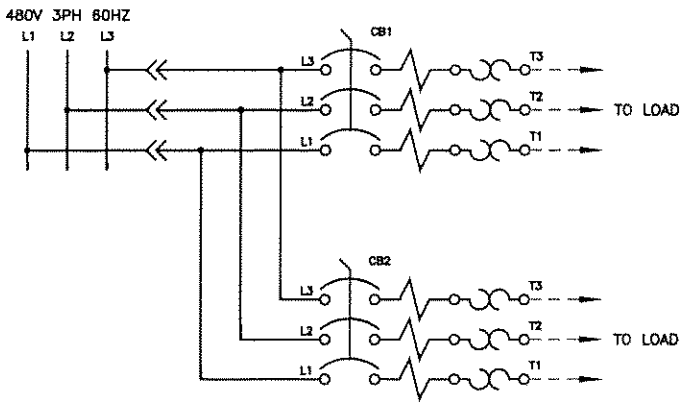

TYPICAL DUAL BREAKER

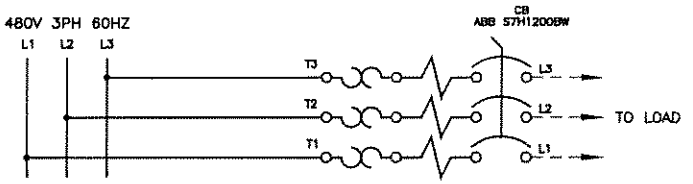

SINGLE BREAKER

LEGEND:
SOLID LINE - CUBICLE/PANEL WIRING
DASHDOT LINE - INTERCUBICLE WIRING
DASHED LINE - FIELD WIRING
BK - BLACK
RT - RED
GN - GREEN
OE - YELLOW (AMBER)
BL - BLUE
WS - WHITE

Rev.	Description	Date	Appr.	Rev.	Description	Date	Appr.

DRAWN AH	Cust. order #	Moeller Order # 21-06-3563
DATE MAY 17 06	FEEDER BREAKERS CLEARWATER GAS PLANT FORT ENERGY CORP.	MOELLER CALGARY BRANCH
APPR		Dwg # 3WD-463-21-06-3563-G