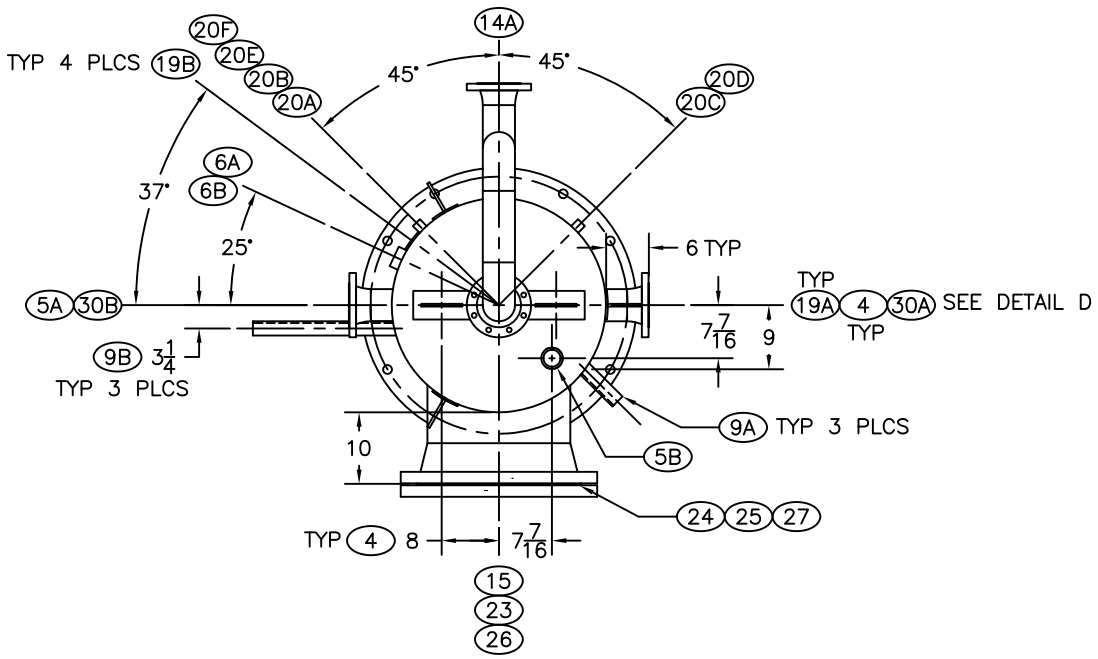

TOP VIEW

SCALE: FULL

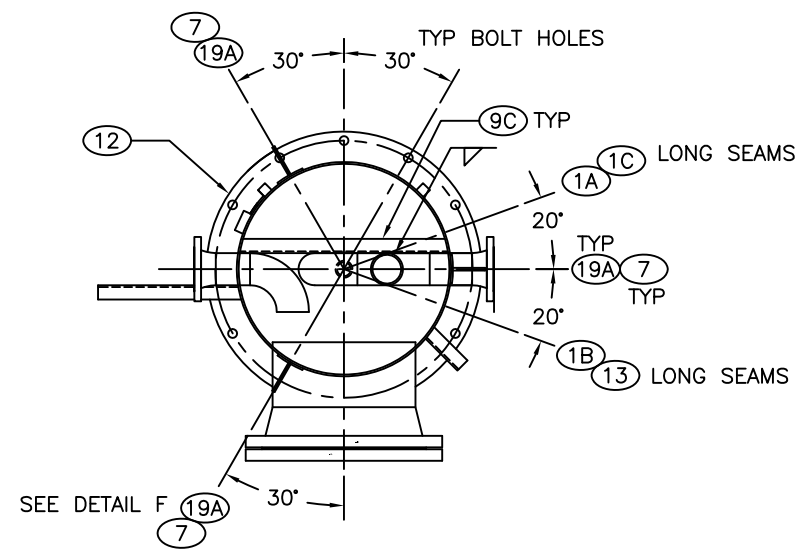

SECTION A – A

SCALE: FULL

EXTERIOR PIPE #14C
REMOVED FOR CLARITY

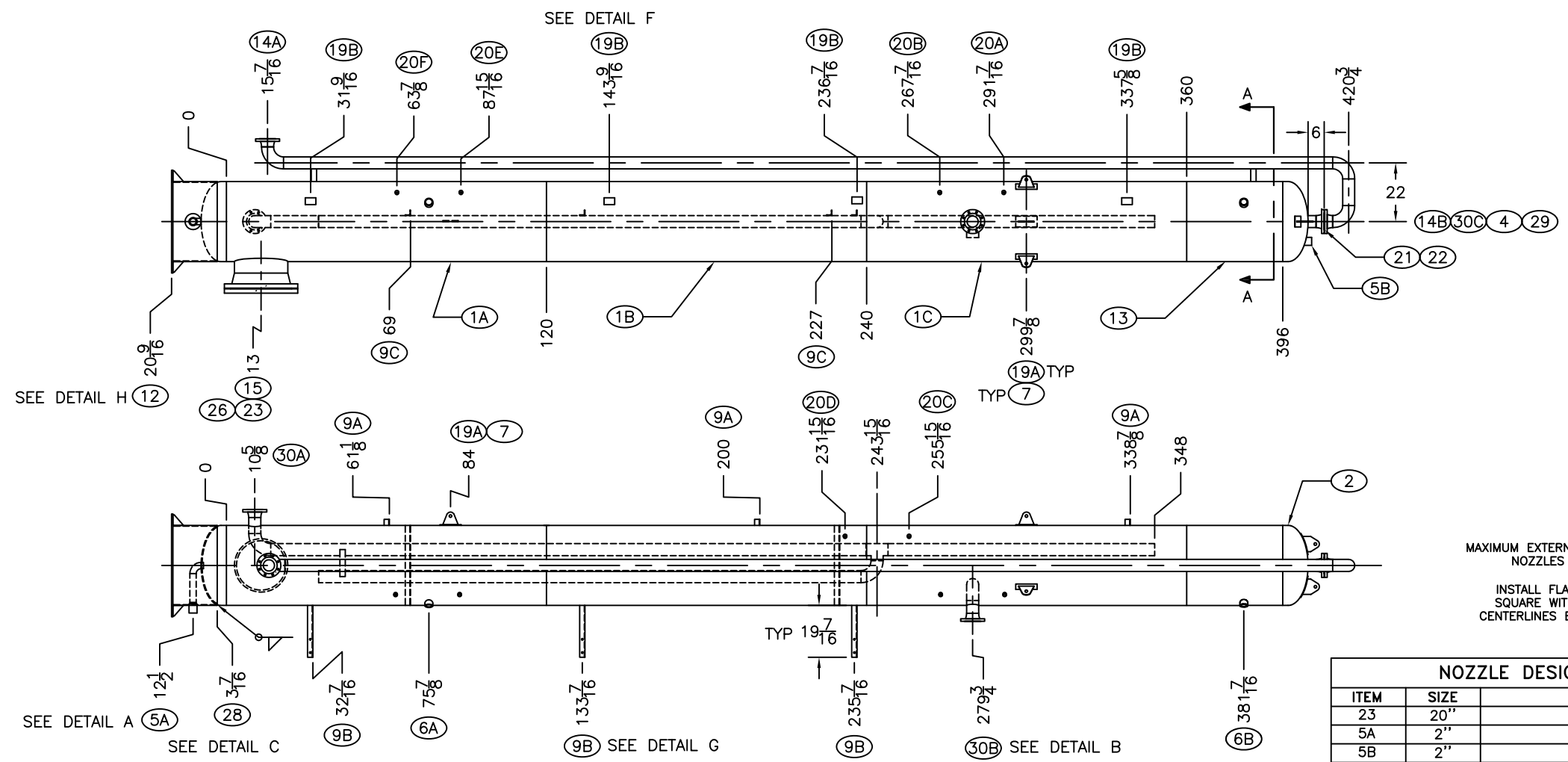

ELEVATION/SIDE VIEW

SCALE: 1/2X

MAXIMUM EXTERNAL EXTENSION ON ALL NOZZLES UNLESS NOTED

INSTALL FLANGES TWO-HOLE SQUARE WITH MAJOR VESSEL CENTERLINES EXCEPT BASE PLATE

MATERIAL SPECIFICATION

STOCK NO.	ITEM	QTY.	DESCRIPTION	GRADE
758-001	1	3	CS, CYLINDERS- 30" X .250 X 120"	SA-36
718-083	2	2	CS, HEAD- 30" OD X 0.375", 2:1 ELLIP	SA51670
721-069	3	48'	CS, PIPE- 4 1/2" OD X 0.237" STD	SA-106B
STD 100-101	4	2	LIFT LUG- 3/8" FOR 30" HEAD	·
730-038	5	2	FS, CPLG, FULL- 2" 3000# THREADED	SA-105
730-070	6	2	FS, CPLG, HALF- 2" 3000# THREADED	SA-105
STD 100-102	7	4	LIFT LUG- 3/8" 10,000#	·
721-035	8	2.2'	CS, PIPE- 2 3/8" OD X 0.218" XH	SA-106B
710-031	9	13'	CS, ANGLE- 1/4" X 2" X 2"	SA-36
732-055	10	1	CS, WELDELL- 2" OD X 0.218 XH 90 LR	SA234WPB
STD 100-405	11	12	GUSSET- 3/8" X 4" X 4"	·
STD 3122-01	12	1	BASE PLATE- 1/2"TK X 38.5"OD	·
758-	13	1	CS, CYLINDER- 30"OD X .250 X 36"	SA-36
733-371	14	2	FS, FLANGE- 4" 150# RFWN STD	SA-105
733-118	15	1	FS, FLG, RF BLIND- 20" 150#	SA-105
713-029	16	2.0'	CS, FLAT- 1/4" X 2" HR	SA-36
745-041	17	1	CS, WELD TEE- 4" OD X 0.237 STD	SA234WPB
732-069	18	5	CS, WELDELL- 4" OD X 0.237 STD 90 LR	SA234WPB
720-273	19	2.2 ☒	CS, PLATE- 1/4" HR	SA-36
730-028	20	6	FS, CPLG, FULL, SE- 3/4" 3000#	SA-105
660-009	21	1	SS, GASKET- 4" 150#	SS316
753-049	22	8	CS, STUD BOLT, B7- 5/8" x 4.00	NC BK
733-471	23	1	FS, FLANGE- 20" 150# RFWN XH	SA-105
660-029	24	1	SS, GASKET- 20" 150#	SS316
753-132	25	20	CS, STUD BOLT, B7- 1 1/8" x 6.50	NC BK
721-245	26	1'	CS, PIPE- 20" OD X 0.500" XH	SA-53B
STD 100-504	27	1	DAVIT- 20" 150# HORIZONTAL	·
758-	28	1	CS, CYLINDER- .250" SKIRT	SA-36
721-075	29	2'	CS, PIPE- 4 1/2" OD X 0.337" XH	SA-106B
733-374	30	3	FS, FLANGE- 4" 150# RFWN XH	SA-105
721-039	31	.20'	CS, PIPE- 2 3/8" OD X 0.343" S/160	SA-106B

HEADS MUST MEET THE REQ. OF UCS 79(D), UG81, MTR'S

A.S.M.E. CODE CONSTRUCTED AND STAMPED AS PER SECTION VIII DIV. 1

	NATIONAL BOARD NO.
	CERTIFIED BY: HEATH TECHNOLOGIES, LLC
W	M.A.W.P.: 75 PSI @ 450° F
	M.D.M.T.: -20° F @ 75 PSI
	SERIAL NO.
	YEAR BUILT

HEAT TREATMENT: NO
CORROSION ALLOWANCE: 0.0625
IMPACT TEST: NO EXEMPT PER UG20(f) 1-5
DESIGN PRESSURE: 75 PSI
HYDRO TEST: 98 PSI
RADIOGRAPHY: NONE
WELDING PROCEDURES: HT-100-1, HT-101-1, HT-106-1
WELDING PROCEDURES: HT-107-1, HT-110-1, HT-105-1
CUSTOMER: ENCANA JOB ID: F2014-3138

© HEATH TECHNOLOGIES ALL RIGHTS RESERVED

HEATH TECHNOLOGIES, LLC
2405 SOUTH HWY. 66
CLAREMORE, OK 74018

THIS DOCUMENT, WHETHER CONTAINING PATENTABLE OR NONPATENTABLE SUBJECT MATTER EMBODIES THE PROPRIETRY AND CONFIDENTIAL INFORMATION OF HEATH TECHNOLOGIES. IT IS LOANED IN CONFINENCE WITH THE UNDERSTANDING THAT IT WILL NOT BE REPRODUCED, USED, OR DISCLOSED FOR ANY PURPOSE EXCEPT THE LIMITED PURPOSE FOR WHICH IT IS LOANED. THIS DOCUMENT SHALL BE RETURNED TO HEATH TECHNOLOGIES UPON DEMAND.

DWN BY:	CHK BY:	QC BY:	ENG:	DATE	DRAWING #
MAH				06-13-14	F2014-3138-133

TITLE: VAPOR RECOVERY TOWER
30" OD X 33'-0" S/S, .0625 CA
75 PSIG, 1000 BBL/DAY
W/ 20" MANWAY

REV. 0
SCALE: NTS
DRAWN BY ENGINEERED CONCEPTS, LLC
PAGE: 1 OF 2

NOZZLE DESIGNATION

ITEM	SIZE	DECRIPTION
23	20"	MANWAY
5A	2"	LIQUID DUMP
5B	2"	RELIEF VALVE
6A	2"	LL SHUT DOWN
6B	2"	HL SHUT DOWN
30A	4"	OIL OUTLET
30B	4"	OIL INLET
30C	4"	VAPOR OUTLET
20A-20B	3/4"	INLET LEVEL GAUGE
20C-20D	3/4"	OUTLET LEVEL GAUGE
20E-20F	3/4"	W/O GAUGE

CODE EDITION	
CODE ADDENDA	
QC	

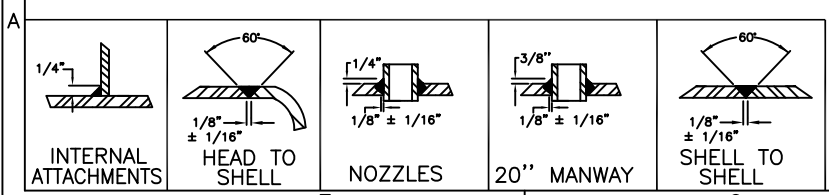

REV.	DESCRIPTION	ZONE	DATE	APPR.