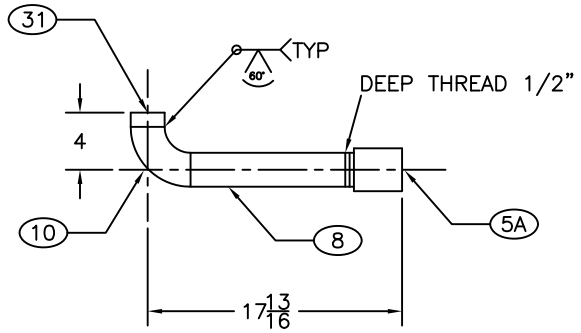

DETAIL A
SCALE: 2X

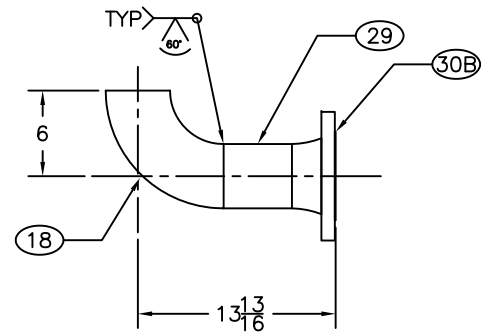

DETAIL B
SCALE: 2X

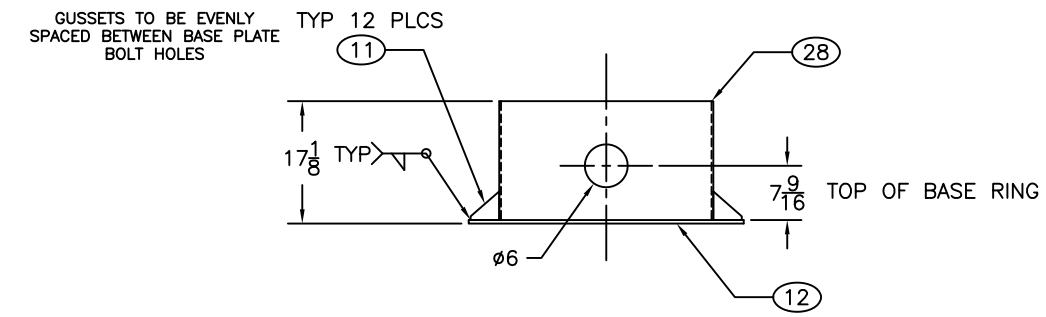

DETAIL C
SCALE: FULL

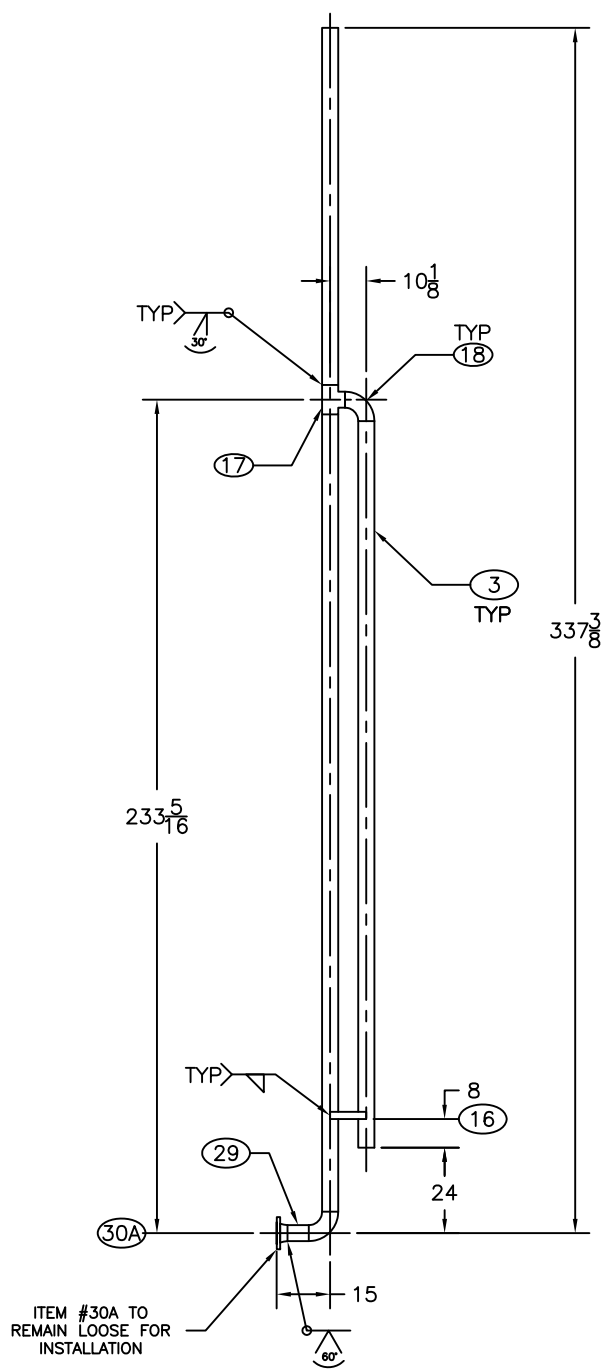

DETAIL D
SCALE: 1/2X

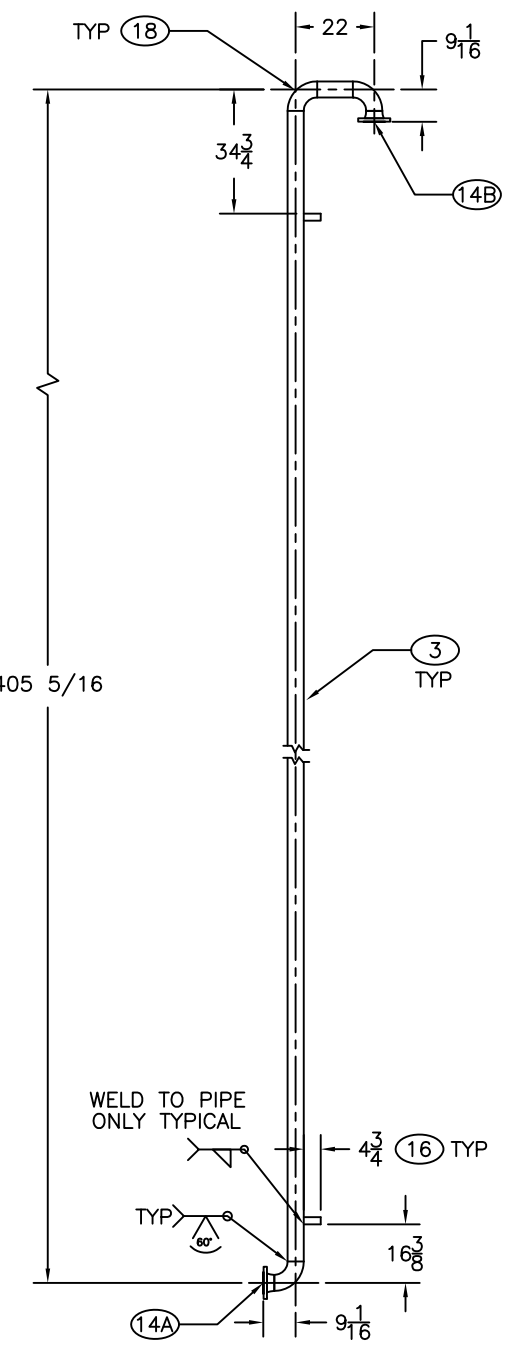

DETAIL E
SCALE: 1/2X

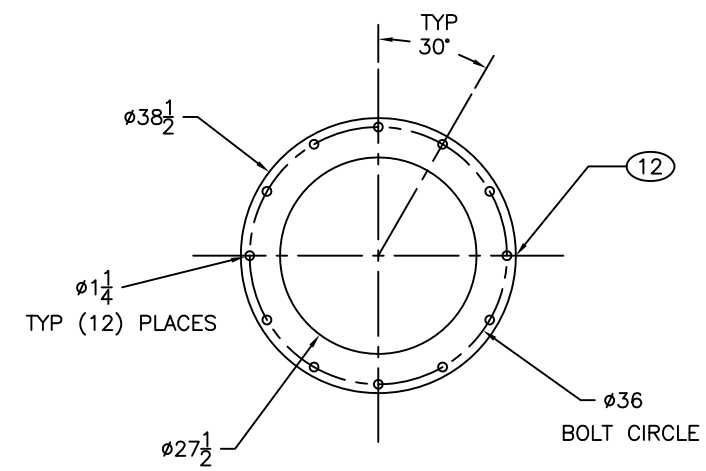

DETAIL H

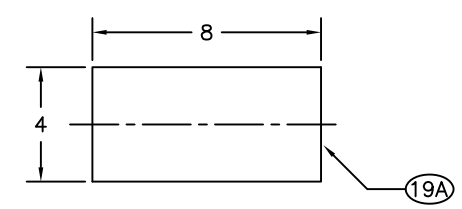

QUANTITY 6 REQUIRED

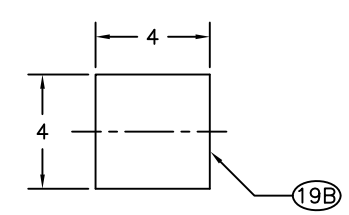

QUANTITY 4 REQUIRED

DETAIL F
SCALE: 4X

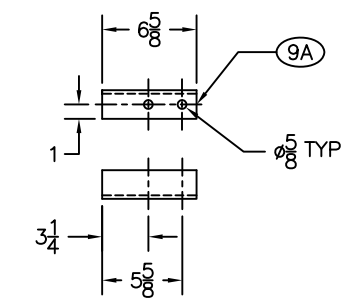

QTY: 3 REQ.

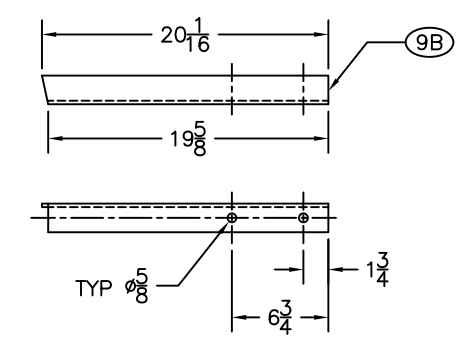

QTY: 3 REQ.

DETAIL G
SCALE: 2X

CUSTOMER: ENCANA JOB ID: F2014-3138

© HEATH TECHNOLOGIES ALL RIGHTS RESERVED

HEATH TECHNOLOGIES, LLC
2405 SOUTH HWY. 66
CLAREMORE, OK 74018

THIS DOCUMENT, WHETHER CONTAINING PATENTABLE OR NONPATENTABLE SUBJECT MATTER EMBODIES THE PROPRIETRY AND CONFIDENTIAL INFORMATION OF HEATH TECHNOLOGIES. IT IS LOANED IN CONFINENCE WITH THE UNDERSTANDING THAT IT WILL NOT BE REPRODUCED, USED, OR DISCLOSED FOR ANY PURPOSE EXCEPT THE LIMITED PURPOSE FOR WHICH IT IS LOANED. THIS DOCUMENT SHALL BE RETURNED TO HEATH TECHNOLOGIES UPON DEMAND.

DWN BY:	CHK BY:	QC BY:	ENG:	DATE	DRAWING #
MAH				06-13-14	F2014-3138-133

TITLE: VAPOR RECOVERY TOWER
30" OD X 32'-0" S/S, .0625 CA
75 PSIG, 800 BBL/DAY
W/ 20" MANWAY

REV. 0
SCALE: NTS
PAGE: 2 OF 2

DRAWN BY ENGINEERED CONCEPTS, LLC

REV.	ZONE	DESCRIPTION	DATE	APPR.	ZONE	DESCRIPTION	DATE	APPR.