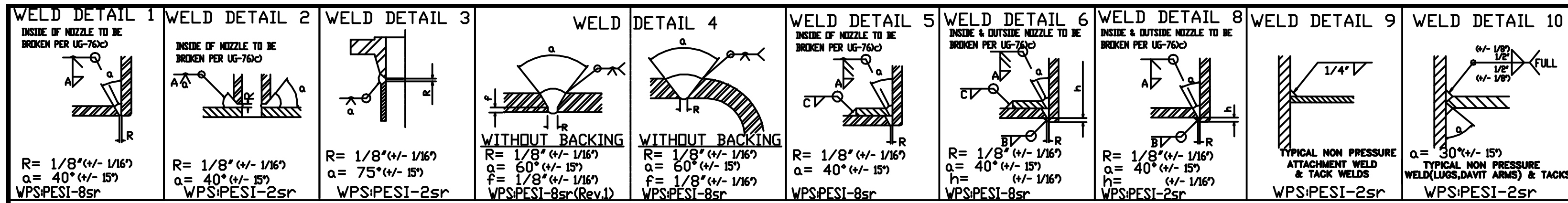

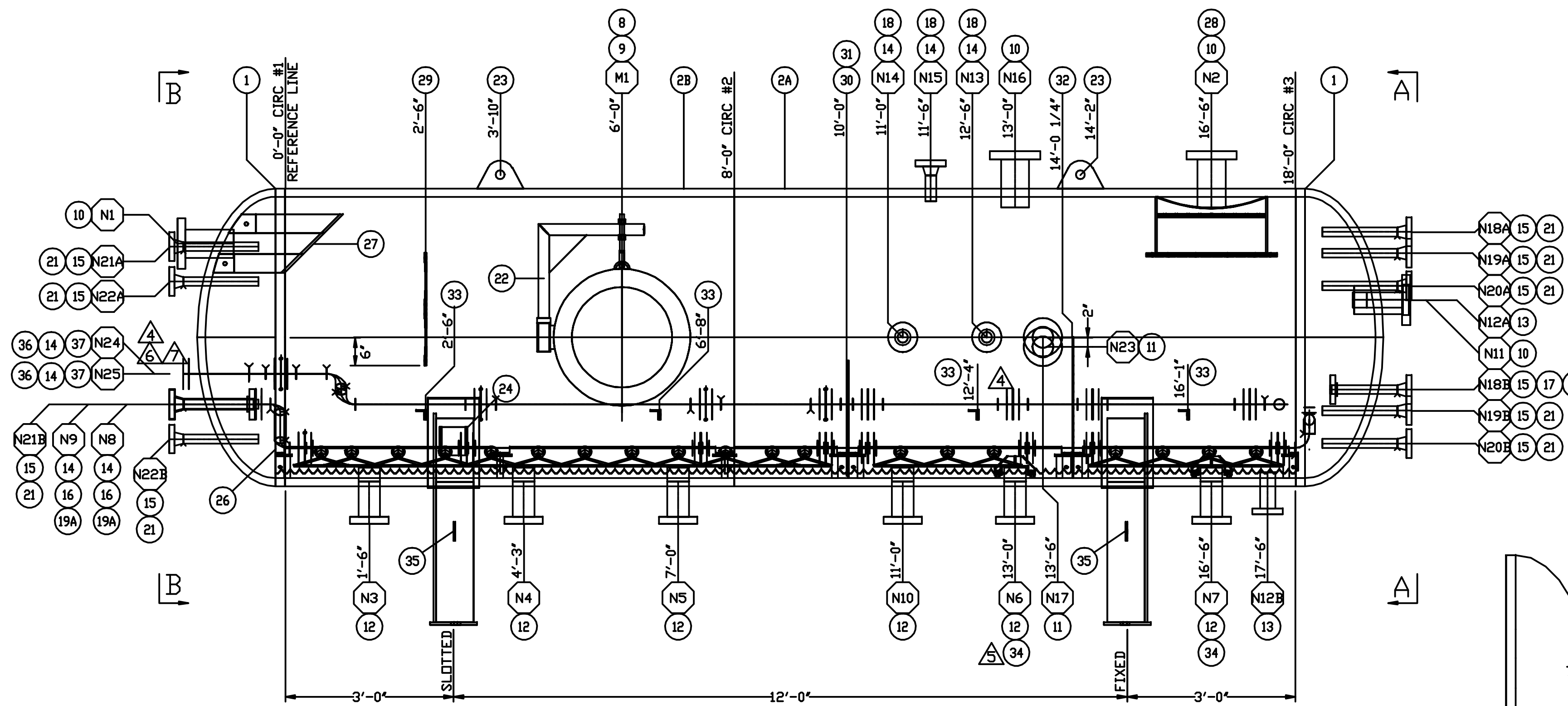

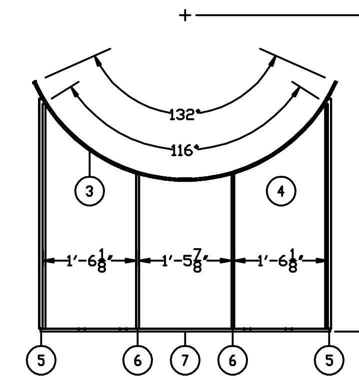

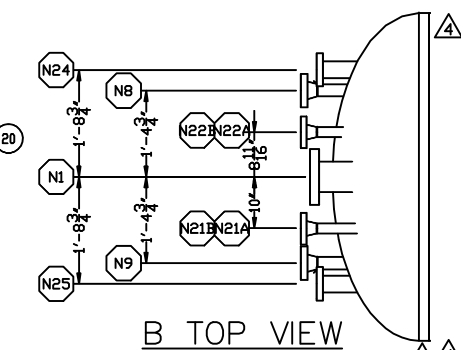

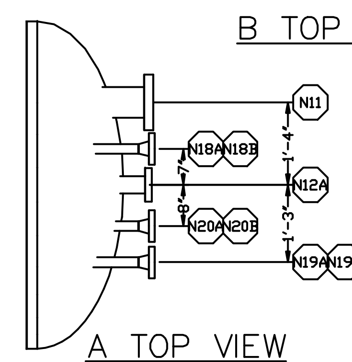

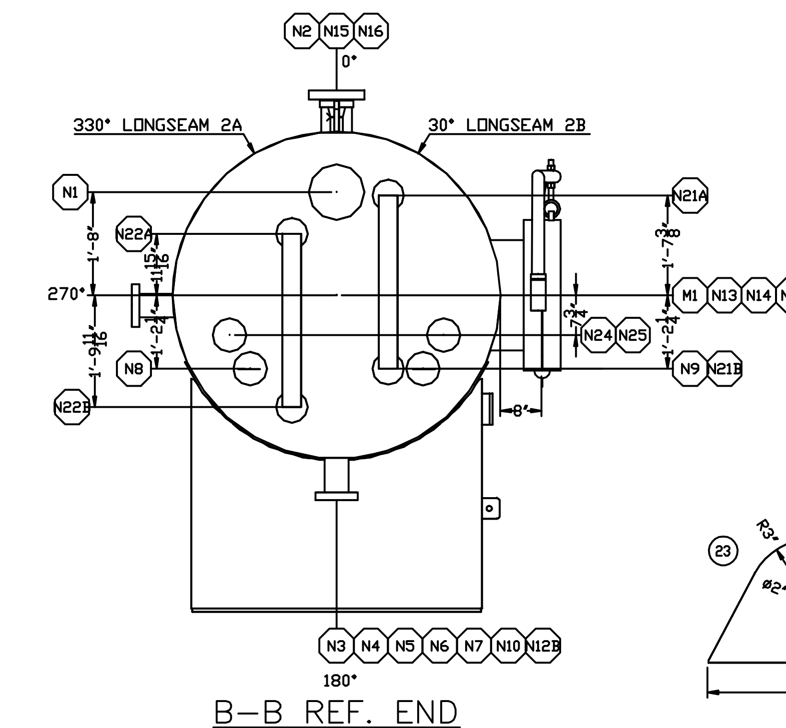

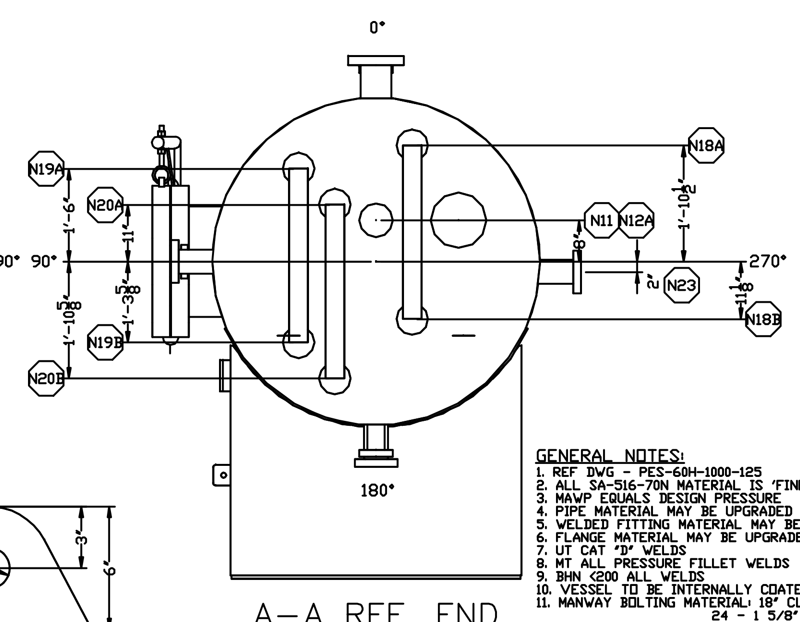

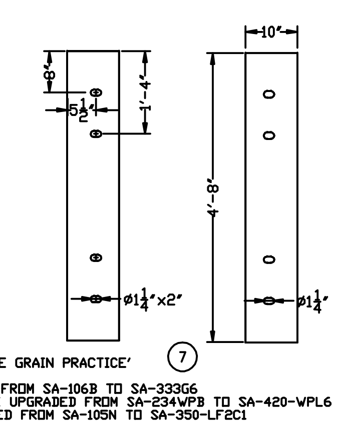

BILL OF MATERIAL

ITEM	QTY	DESCRIPTION	MATERIAL
1	2	HEADS – 60" ID x 1 3/4" NOM (1.6875" MIN) 2:1 SE c/w 2" S.F.	SA516–70N
2A	1	SHELL – 60" ID x 1 3/4" NOM x 10'–0" 0'–0" S/S	SA516–70N
2B	1	SHELL – 60" ID x 1 3/4" NOM x 8'–0" 0'–0" S/S	SA516–70N
3	2	WEAR PLATE – 11" WIDE x 86" LONG x 3/8" THICK ROLLED TO 63 1/2" ID	SA516–70N
4	2	FACE PLATE – 56 3/8" WIDE x 44 1/2" HIGH x 1/2" THICK	CSAG40.21 44W
5	4	SIDE PLATE – 8" WIDE x 43 1/2" LONG x 1/2" THICK	CSAG40.21 44W
6	4	RIB PLATE – 8" WIDE x 29 7/8" LONG x 1/2" THICK	CSAG40.21 44W
7	2	BASE PLATE – 10" x 56" x 5/8" THICK, ONE SLOTTED & ONE FIXED	CSAG40.21 44W
8	1	BLIND FLANGE – 18" CL600 RF	SA–105N
9	1	FVC FLANGE – 18" CL600 RFHB 18" ID x 2.60" WALL x 16" LONG	SA–350–LF2 CL1
10	4	FVC FLANGE – 4" CL600 RFHB 4" ID x 1.62" WALL x 12" LONG	SA–105N
11	2	FVC FLANGE – 3" CL600 RFHB 3" ID x 1.24" WALL x 14" LONG	SA–105N
12	6	FVC FLANGE – 3" CL600 RFHB 3" ID x 1.24" WALL x 12" LONG	SA–105N
13	2	FVC FLANGE – 2" CL600 RFHB 2" ID x 1.00" WALL x 12" LONG	SA–105N
14	7	FLANGE – 2" CL600 RFWN SCH.160	SA–105N
15	10	FLANGE – 1 1/2" CL600 RFWN SCH.XXH	SA–105N
16	2	FLANGE – 2" CL600 RFSO	SA–105N
17	1	FLANGE – 1 1/2" CL600 RFSO	SA–105N
18	3	PIPE – 2" SCH.160 0.344" WALL x 5 1/2" LONG	SA–106B
19A	2	PIPE – 2" SCH.160 0.344" WALL x 15 1/16" LONG	SA–106B
20	1	PIPE – 1 1/2" SCH.XXH 0.400" WALL x 14" LONG	SA–106B
21	9	PIPE – 1 1/2" SCH.XXH 0.400" WALL x 16" LONG	SA–106B
22	1	DAVIT ARM – c/w 1" THICK SUPPORT PLATE	SA516–70N
23	2	LIFT LUG – 1" THICK PLATE	SA516–70N
24	1	NAME PLATE MOUNTING BRACKET	SA–36
25	1	GASKET – 18" CL600 316SS GRAPHOIL	316SS
26	1	DESANDING TROUGHS	
27	1	INLET DEFLECTOR c/w 4 TABS	CSAG40.21 44W
28	1	MISTEX SUPPORT	
29	1	DEWAVE PLATE	CSAG40.21 44W
30	1	WEIR PLATE	CSAG40.21 44W
31	1	WEIR PLATE BRACKET	CSAG40.21 44W
32	1	FUTURE WEIR PLATE BRACKET	CSAG40.21 44W
33	4	REMOVABLE SUPPORTS – 1/4" x 2" ANGLE IRON c/w 1/4" x 2" FB TABS	CSAG40.21 44W
34	2	REMOVABLE VORTEX BREAKER	CSAG40.21 44W
35	2	GROUND LUGS – 3/8" PLATE 4" x 4"	CSAG40.21 44W
36	2	CONCENTRIC REDUCER – 2 1/2"x2" SCH.160	SA–234WPB
37	2	FVC FLANGE – 2" CL600 RFHB 2" ID x 1.00" WALL x 14" LONG TRANSITION PLAIN END TO ø2.125 ID	SA–105N

NOZZLE SCHEDULE

MK	SIZE	RATING	SCHD	SERVICE	PROJECTION OUTSIDE	PROJECTION INSIDE	WELD DETAIL	FILLET WELD SIZE A	B	C	LOCATION	CUT LENGTH
M1	18"	CL600	RFHB	MANWAY	AS SHOWN	2 3/4"	8	3/8"	1/4"	–	SHELL	16"
N1	4"	CL600	RFHB	GAS IN	8"	SF	8	3/8"	–	–	HEAD	12"
N2	4"	CL600	RFHB	GAS OUT	8"	SF	8	3/8"	–	–	SHELL	12"
N3	3"	CL600	RFHB	DESAND DRAIN	8"	GF	1	3/8"	–	–	SHELL	12"
N4	3"	CL600	RFHB	DESAND DRAIN	8"	GF	1	3/8"	–	–	SHELL	12"
N5	3"	CL600	RFHB	DESAND DRAIN	8"	GF	1	3/8"	–	–	SHELL	12"
N6	3"	CL600	RFHB	FUTURE WATER OUT	8"	GF	1	3/8"	–	–	SHELL	12"
N7	3"	CL600	RFHB	HC / WATER OUT	8"	GF	1	3/8"	–	–	SHELL	12"
N8	2"	CL600	160	WATER INJECT	6"	8 3/4"	8 & 3	3/8"	–	–	HEAD	14 1/4"
N9	2"	CL600	160	WATER INJECT	6"	8 3/4"	8 & 3	3/8"	–	–	HEAD	14 1/4"
N10	3"	CL600	RFHB	LIQUID DRAIN	8"	GF	1	3/8"	–	–	SHELL	12"
N11	4"	CL600	RFHB	LSH	8"	SF	8	3/8"	–	–	HEAD	12"
N12A	2"	CL600	RFHB	FUTURE LC / BRIDLE CONN.	6"	1/4"	1	3/8"	–	–	HEAD	12"
N12B	2"	CL600	RFHB	FUTURE LC / BRIDLE CONN.	6"	GF	8	3/8"	–	–	SHELL	12"
N13	2"	CL600	160	PI	6"	SF	8 & 3	3/8"	–	–	SHELL	5 1/2"
N14	2"	CL600	160	TI	6"	SF	8 & 3	3/8"	–	–	SHELL	5 1/2"
N15	2"	CL600	160	PSV	6"	SF	8 & 3	3/8"	–	–	SHELL	5 1/2"
N16	4"	CL600	RFHB	FUTURE LEVEL TRANSMITTER	8"	SF	8	3/8"	–	–	SHELL	12"
N17	3"	CL600	RFHB	LC	8"	SF	8	3/8"	–	–	SHELL	14"
N18A/B	1 1/2"	CL600	XXH	SG	6"	–	8 & 3	3/8"	–	–	HEAD	14"/16"
N19A/B	1 1/2"	CL600	XXH	SG	6"	–	8 & 3	3/8"	–	–	HEAD	16"
N20A/B	1 1/2"	CL600	XXH	SG	6"	–	8 & 3	3/8"	–	–	HEAD	16"
N21A/B	1 1/2"	CL600	XXH	SG	6"	–	8 & 3	3/8"	–	–	HEAD	16"
N22A/B	1 1/2"	CL600	XXH	SG	6"	–	8 & 3	3/8"	–	–	HEAD	16"
N23	3"	CL600	RFHB	LIQUID DUMP	8"	–	1	3/8"	–	–	SHELL	12"
N24	2"	CL600	RFHB	STEAM HEADER	6"	1/4"	1	3/8"	–	–	HEAD	14"
N25	2"	CL600	RFHB	STEAM HEADER	6"	1/4"	1	3/8"	–	–	HEAD	14"

GENERAL NOTES:

1. REF DWG – PES-60H-1000-125
2. ALL SA-516-70N MATERIAL IS 'FINE GRAIN PRACTICE'
3. MAWP EQUALS DESIGN PRESSURE
4. PIPE MATERIAL MAY BE UPGRADED FROM SA-106B TO SA-333G6
5. WELDED FITTING MATERIAL MAY BE UPGRADED FROM SA-234WPB TO SA-420-WPL6
6. FLANGE MATERIAL MAY BE UPGRADED FROM SA-105N TO SA-350-LF2C1
7. UT CAT 'D' WELDS
8. MT ALL PRESSURE FILLET WELDS
9. BHN <200 ALL WELDS
10. VESSEL TO BE INTERNALLY COATED
11. MANWAY BOLTING MATERIAL: 18" CL600 316SS GRAPHOIL GASKET
    24 – 1 5/8" DIA. x 10 3/4" LONG SA-193-B7M STUDS
    48 – 1 5/8" DIA. SA-194-2HM NUTS
12. NOZZLE BUTT WELDS TO BE RADIOGRAPHED 100%
13. STRUCTURAL ATTACHMENTS ON THE VESSEL MUST BE CODE COMPLIANT
14. ALL WELDING ON THE VESSEL MUST BE DONE PRIOR TO PWHT
15. GRID SCAN ON 6" GRID REQUIRED ON HEADS.
16. %Mn/%C ≥ 2.5; %C + %Mn/4 ≤ 0.55
17. ALL MATERIAL SHALL COMPLY WITH THE LATEST VERSION OF NACE MR-0175

DESIGN DATA

DESIGN AND FABRICATE TO ASME CODE, SECTION VIII DIV. 1 2007, EDITION 2008 ADDENDA
MAWP: 1000 PSIg AT 500°F
MDMT: -20°F AT 1000 PSIg RADIOGRAPHY: CIRCS & LONG SEAMS-FULL PER UW-11a
IMPACT TESTS: HEADS & SHELL PRODUCTION IMPACT TEST AS PER UG-84 TO -20°F/ NOZZLES ARE IMPACT TEST EXEMPT AS PER UG-20f(1-5)/UCS-66(b)(1)(b)/UCS-66(b)(2)
PWHT: YES FOR 105 MIN. @ 1150°F
HYDROSTATIC TEST PRESSURE 1500 PSIg (1.5x DESIGN PRESSURE) PREHEAT: 200°F
CORROSION ALLOWANCE: 1/8" HEAD MINIMUM THICKNESS: 1.6875"
WEIGHT EMPTY: 30203 LBS (18'-0"s/s) WEIGHT FULL OF WATER: 54664 LBS
ALL SA-516-70N MATERIAL FINE GRAIN PRACTICE. CAPACITY: 391.9 cu.ft

CALC PKG REV.LEVEL	REV. CALCS REQ'D	REV	DESCRIPTION	BY	DD	PC	QC	DATE
3	NO	8	AS BUILT	DF				09-12-04
3	NO	7	ADJUSTED DSP ON N24, N25	JS				09-11-16
3	YES	6	CHANGED N24, N25 TO RFHB	JS				09-11-10
2	YES	5	REVISED DESIGN TEMP, ADDED VORTEX BREAKER, ADJUSTED CALC PKG#	JS				09-11-02
1	NO	4	REVISED AS PER CUSTOMER	JS	.	.	.	09-10-23
1	YES	3	MOVED SIDE PLATES INWARDS ON SADDLE LEGS	DF	.	.	.	09-08-14
0	NO	2	REVISED	DF	.	.	.	09-08-10
0	NO	1	REVISED	DF	.	.	.	09-07-28

Paintearth
ENERGY SERVICES INC.

DATE: 09-07-06
DESIGNED BY: PES
DRAWN BY: D.FOWLER
CHECKED BY:
APPROVED BY:
CLIENT: APACHE
TITLE: HORIZONTAL VESSEL DRAWING 60"ID x 18'-0" S/S MAWP 1000 PSIg @ 500°F, 1/8" C.A.
PROJECT NO.: .
FILENAME: V 10443
CRN NO.: .
SCALE: N.T.S.
SHEET NO.: 1 OF 1
DRAWING NO.: V 10443
REV. NO.: 8