encana™

natural gas

BIGHORN
ELECTRICAL TEMPLATE
TRIPLE WET METER SKID
PAD SITE
LSD

ENCANA PROJECT No. TBD
ENCANA AFE No. TBD
ISSUED FOR
RTU PANEL BID

MAC Engineering

PROJECT No. 2011-0132
ELECTRICAL

encana natural gas

MAC ENGINEERING INC.

ELECTRICAL DRAWING INDEX
PAD SITE TEMPLATE PACKAGE

BIGHORN BU | N | BHT0148A

THIS DRAWING REPRESENTS PROPRIETARY INFORMATION AND SHOULD NOT BE DISTRIBUTED OR MODIFIED IN ANY MANNER THAT IS NOT IN THE BEST INTEREST OF ENCANA OR THE ORIGINAL AUTHOR.

March 23, 2011 3:52:35 p.m.
Drawing: G:\ECAD\ENCANA\12218-8\E-TMP-DWGS\BHT0144A.DWG TAB NAME: MODEL
Xrefs:

DRAWING NO.	DRAWING TITLE	ISSUED FOR APPROVAL	ISSUED FOR BID	ISSUED FOR CONSTRUCTION	AS BUILT	REV.	REMARKS
BHT0148A	ELECTRICAL DRAWING INDEX	–	2011-11-18	–	–	1B-1	–
BHT0148B	ELECTRICAL SITE PLAN – AREA CLASSIFICATION	–	2011-11-18	–	–	1B-1	–
BHT0148C	ELECTRICAL SITE PLAN – CABLE ROUTING & GROUNDING	–	2011-11-18	–	–	1B-1	–
BHT0148D	ALARM & SHUTDOWN KEY	–	2011-11-18	–	–	1B-1	–
BHT0148E	CABLE & CONDUIT SCHEDULE	–	2011-11-18	–	–	1B-1	–
BHT0148F	RTU CONTROL PANEL – SCADAPACK 32 – PANEL LAYOUT	–	2011-11-18	–	–	1B-1	–
BHT0148G	RTU CONTROL PANEL – SCADAPACK 32 – BILL OF MATERIAL AND NAME PLATE SCHEDULE	–	2011-11-18	–	–	1B-1	–
BHT0148H	RTU CONTROL PANEL – SCADAPACK 32 – 24VDC POWER DISTRIBUTION	–	2011-11-18	–	–	1B-1	–
BHT0148I	RTU CONTROL PANEL – SCADAPACK 32 – DISCRETE INPUT I/O SCHEMATIC	–	2011-11-18	–	–	1B-1	–
BHT0148J	RTU CONTROL PANEL – SCADAPACK 32 – DISCRETE OUTPUT I/O SCHEMATIC	–	2011-11-18	–	–	1B-1	–
BHT0148K	RTU CONTROL PANEL – SCADAPACK 32 – ANALOG INPUT I/O SCHEMATIC	–	2011-11-18	–	–	1B-1	–
BHT0148L	RTU CONTROL PANEL – SCADAPACK 32 – ANALOG OUTPUT I/O SCHEMATIC	–	2011-11-18	–	–	1B-1	–
BHT0148M	RTU CONTROL PANEL – SCADAPACK 32 – PUSLE INPUT I/O SCHEMATIC	–	2011-11-18	–	–	1B-1	–
BHT0148N	RTU CONTROL PANEL – SCADAPACK 32 – DISCRETE INPUT I/O SCHEMATIC	–	2011-11-18	–	–	1B-1	–
BHT0148P	RTU CONTROL PANEL – SCADAPACK 32 – DISCRETE INPUT I/O SCHEMATIC	–	2011-11-18	–	–	1B-1	–
BHT0148Q	RTU CONTROL PANEL – SCADAPACK 32 – DISCRETE OUPUT I/O SCHEMATIC	–	2011-11-18	–	–	1B-1	–
BHT0148R	RTU CONTROL PANEL – SCADAPACK 32 – ANALOG INPUT I/O SCHEMATIC	–	2011-11-18	–	–	1B-1	–
BHT0148S	RTU CONTROL PANEL – SCADAPACK 32 – ANALOG OUTPUT I/O SCHEMATIC	–	2011-11-18	–	–	1B-1	–
BHT0148T	RTU CONTROL PANEL – SCADAPACK 32 – COMMUNICATIONS SCHEMATIC	–	2011-11-18	–	–	1B-1	–
BHT0148U	ELECTRICAL LAYOUT – POWER AND CONTROL – DUAL LEFT WET METER SKID	–	2011-11-18	–	–	1B-1	–
BHT0148V	ELECTRICAL INSTALLATION DETIALS	–	2011-11-18	–	–	1B-1	–
BHT0148W	ELECTRICAL INSTALLATION DETIALS	–	2011-11-18	–	–	1B-1	–

CADD DWG – DO NOT MANUALLY CHANGE

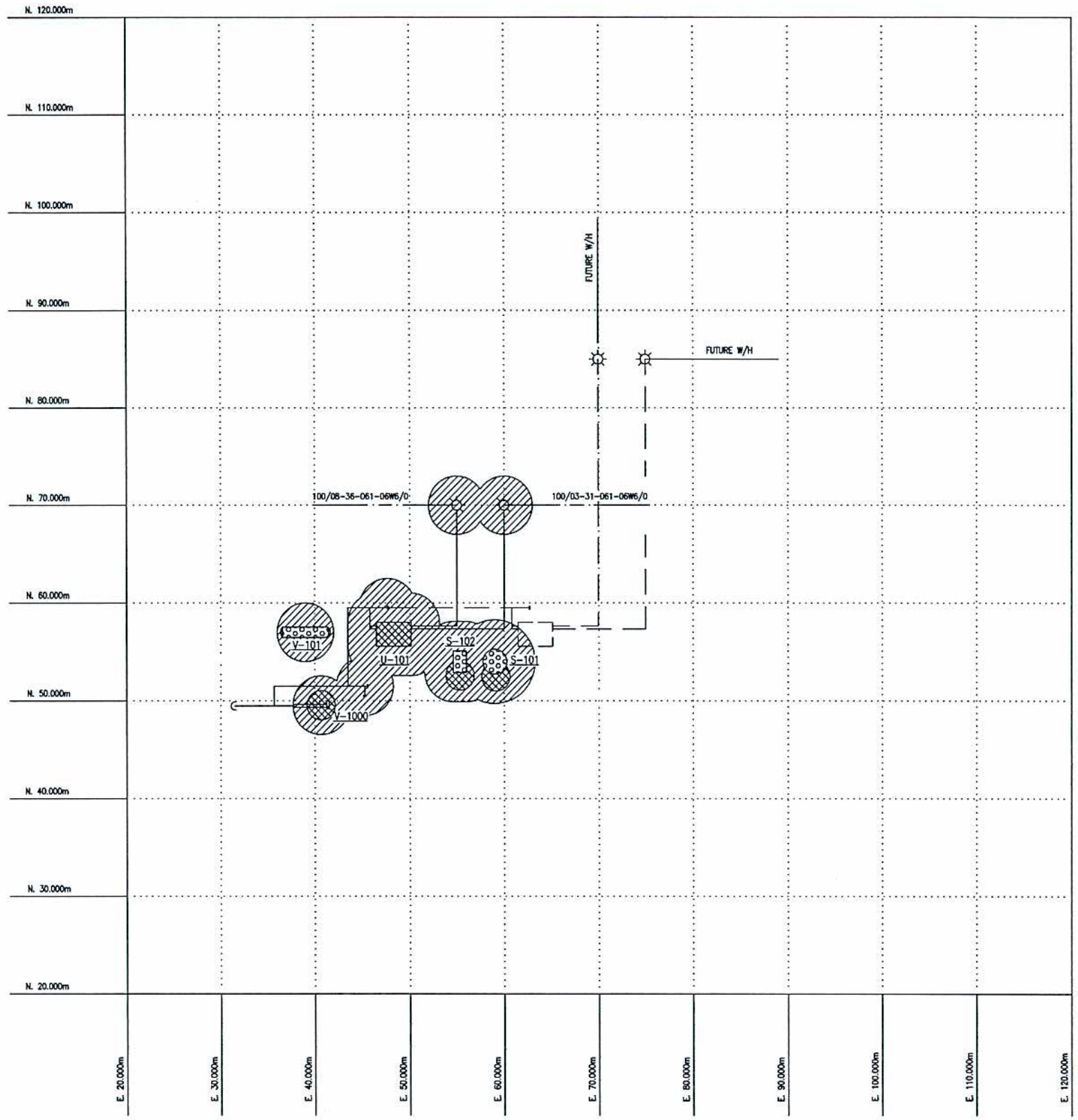

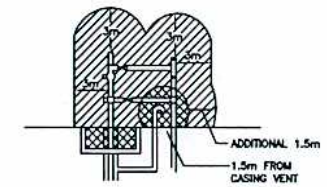

N.T.S.

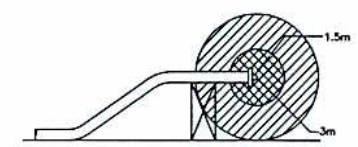

(ADEQUATELY VENTILATED AREA)

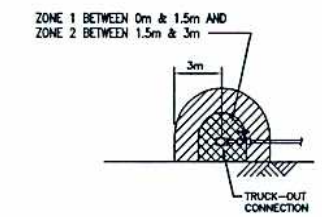

N.T.S.

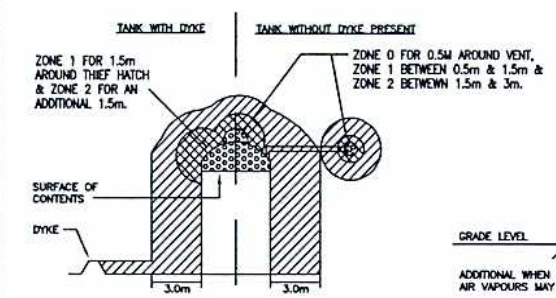

(PRODUCED WATER AND/OR H.C. LIQUID)

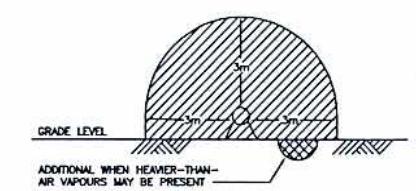

N.T.S.

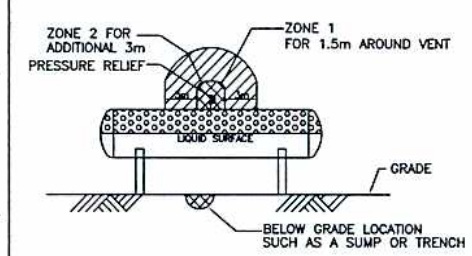

N.T.S.

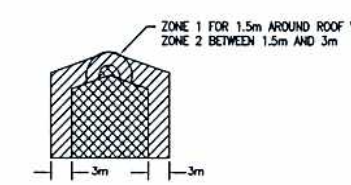

N.T.S.

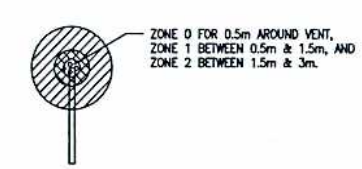

LEGEND

- CLASS I, ZONE 0, GROUP IIA, TEMP. CODE T2C
- CLASS I, ZONE 1, GROUP IIA, TEMP. CODE T2C
- CLASS I, ZONE 2, GROUP IIA TEMP. CODE T2C
- CLASS I, ZONE 2, GROUP IIA, TEMP. CODE T2C 600mm ABOVE GRADE
- NON-HAZARDOUS

EQUIPMENT

U-101 – DUAL WET METER SKID
S-101 – METHANOL STORAGE TANK
S-102 – INHIBITOR TANK
V-101 – PROPANE TANK
V-1000 – PIG CADDY AUTO LAUNCHER

0 5m 10m 15m 20m 25m
SCALE BAR

REFERENCE DRAWINGS	DWG. NO.
.	.
.	.
.	.
.	.

CAUTION : READ BEFORE EXCAVATION

ALL EXCAVATIONS MUST BE CARRIED OUT AS PER "ENCANA'S GROUND DISTURBANCE PRACTICE"

NO.	DATE (YYYY-MM-DD)	PROJECT DESCRIPTION	PROJ.	AFE	EPCM Co.	EPCM No.	APPD.
1	2011.11.18	RTU PANEL CONSTRUCTION	.	.	MAC ENG.	2011-0132	.
.	–	.	.	.	.	.	.
.	–	.	.	.	.	.	.
.	–	.	.	.	.	.	.
.	–	.	.	.	.	.	.
.	–	.	.	.	.	.	.
.	–	.	.	.	.	.	.
.	–	.	.	.	.	.	.
.	–	.	.	.	.	.	.

REV.NUMBER 1B-1

ISSUE STAGE		DATE (YYYY-MM-DD)	BY	CHKD.	APPD.
Prelim.	(A)	–	.	.	.
Bid	(B1)	2011.11.18	.	.	.
Constr.	(C)	–	.	.	.
As-built	(D)	–	.	.	.
.		–	.	.	.
.		–	.	.	.
.		–	.	.	.
.		–	.	.	.

PERMIT STAMP | ENGINEER'S STAMP

PERMIT STAMP AND PROFESSIONAL STAMP AFFIXED ABOVE SHALL APPLY ONLY TO REV(s) 1B-1

encana natural gas

MAIN FAC.	BIGHORN TYPICALS
MAIN LOC.	VARIES
ENG. TYPE	PAD SITE
SITE LOC.	VARIES
SCALE	1:250 (A1 Size)
EPCM No.	2011-0132

EPCM Co. MAC ENGINEERING INC.

TITLE ELECTRICAL PLOT PLAN AREA CLASSIFICATION

AREA BIGHORN BU | CLASS N | FILE NO. BHT0148B

PLOTTED: 18/11/2011 10:08:09 AM, BY: DAVID SIN
LAST SAVED: 18/11/2011 10:07:43 AM BY: DSIN
March 23, 2011 3:40:48 p.m.
Drawing: Q:\EDM\ENCANA\12218-B\E-TMP-DWGS\BHT0148B.DWG TAB NAME: MODEL
Xrefs: eng-perm2.dwg, eng-plc.dwg
1-400mm (paper z: lbs lbs lbs) v.7

FILE Y:\PROJECTS\2011\2011-0132 - ENCANA 2012 METER SKID RFQ RTU PANEL DESIGN\DRAWINGS\ELECTRICAL\ISSUED FOR BID\BHT0148B.DWG

Date and Time Saved: 2011-02-04, 8:13 AM

Drawings Must Comply with Encana Drafting Standards (ECA-DDM-S-01)

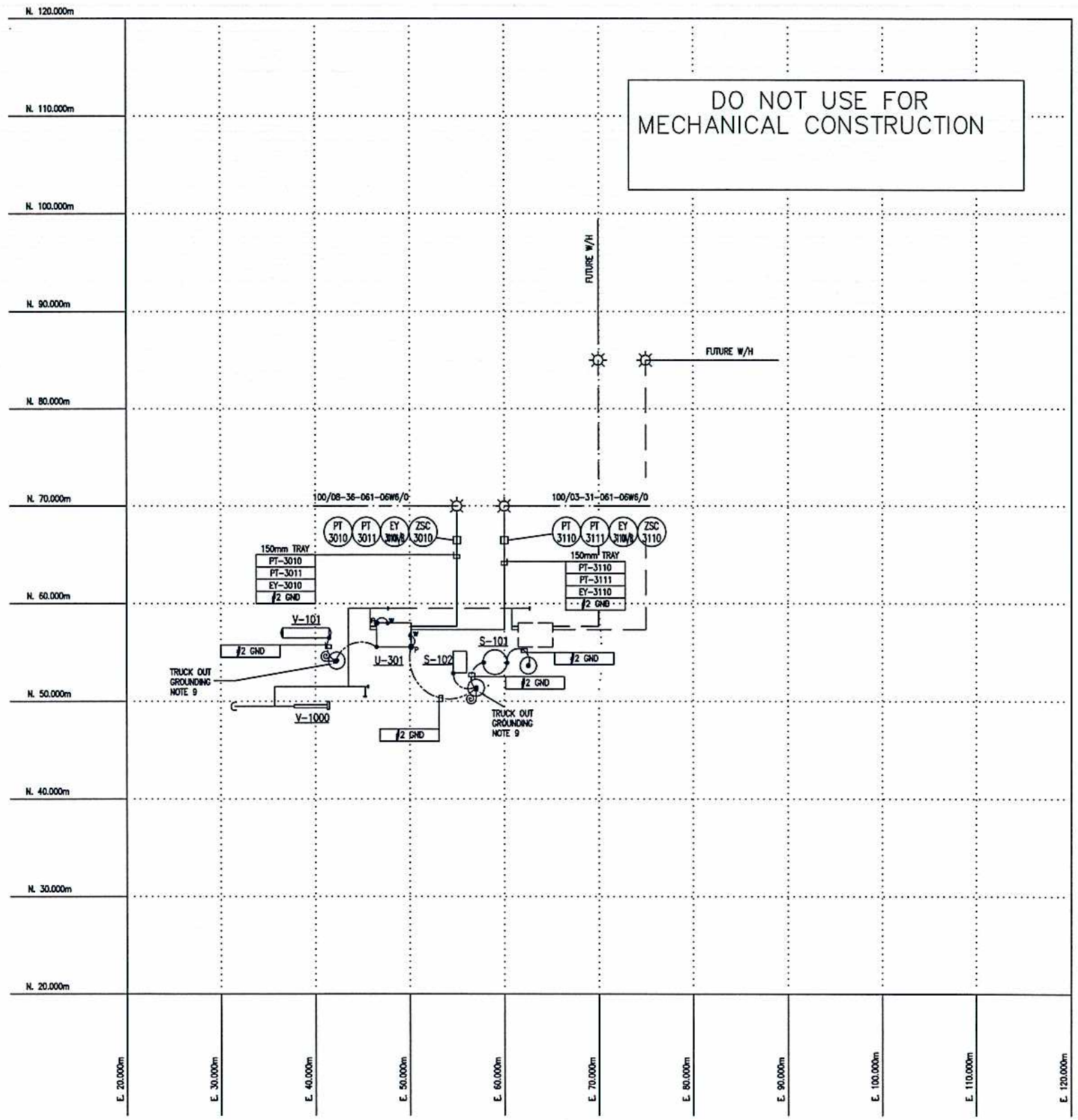

NOTES:

GROUND WELL C/W GROUND ROD.

BOLTED TYPE CONNECTION – BURNDY SERVIT POST STYLE.
P – CONNECTION TO STEEL PILE
W – CONNECTION TO WALL OF BUILDING

COMPRESSION TYPE CONNECTION – BURNDY HYGROUND OR APPROVED EQUAL COMPRESSION TO BE MADE WITH BURNDY HYPRESS.

STEEL PILE USED AS GROUND ELECTRODE

1. MAXIMUM RESISTANCE TO GROUND SHALL BE 5 OHMS. CONTRACTOR SHALL ADD MORE GROUND ELECTRODES AS REQUIRED.
2. PLANT, MAIN GROUND SHALL BE #2 AWG TWH COLOURED GREEN AND SHALL BE INSTALLED IN CABLE TRAY & BONDED TO STEEL PILE AT LOCATIONS AS INDICATED ON DRAWING.
3. CONNECTIONS FROM PLANT SYSTEM GROUND TO VESSELS AND BUILDINGS SHALL BE #2 AWG TWH INSULATION COLOURED GREEN.
4. ALL ABOVE GROUND CONNECTIONS TO BE PROTECTED WHEN LEAVING GROUND BY 21mm PVC CONDUIT.
5. ALL ELECTRICAL EQUIPMENT IS TO BE GROUNDED TO BUILDING GROUND PLATE IN ACCORDANCE WITH THE C.E.C. SECTION 10 AND AS SHOWN ON THE DRAWINGS.
6. ALL GROUNDING CONDUCTOR CONNECTIONS ABOVE GROUND SHALL BE COATED WITH GLYPTAL PAINT. UNDERGROUND CONNECTIONS SHALL BE COATED WITH GLYPTAL PAINT AND WRAPPED WITH RUBBER TAPE.
7. SEALS SHALL BE INSTALLED AS REQUIRED BY THE C.E.C.
8. CABLE TRAY TO BE GROUNDED EVERY 10M AS SHOWN ON DETAILS. EVERY TRAY EXPANSION JOINT SHALL HAVE #2 TWH BONDING JUMPER.
9. COIL 8 METERS #4 WELDING CABLE COMPLETE WITH GROUND LUG CLAMP WELDING TYPE AT TWO LOCATIONS INDICATED ON THIS DRAWING.
10. MAIN CABLE TRAY RUNS ON PIPERACK SHALL BE LADDER TYPE, ALUMINUM LOAD CLASS 'E' (900, 600, 450, 300, 150mm) WIDTH AS SPECIFIED C/W 150mm SIDE RAILS, 220mm RUNG SPACING, 6 METER SPAN AND ALL INTERCONNECTING HARDWARE ACCESSORIES.

EQUIPMENT

U-301 – TRIPLE WET METER SKID
S-101 – METHANOL STORAGE TANK
S-102 – INHIBITOR TANK
V-101 – PROPANE TANK
V-1000 – PIG CADDY AUTO LAUNCHER

0 5m 10m 15m 20m 25m
SCALE BAR

REFERENCE DRAWINGS	DWG. NO.
.	.
.	.
.	.
.	.

CAUTION : READ BEFORE EXCAVATION
ALL EXCAVATIONS MUST BE CARRIED OUT AS PER "ENCANA'S GROUND DISTURBANCE PRACTICE"

NO.	DATE (YYYY-MM-DD)	PROJECT DESCRIPTION	PROJ.	AFE	EPCM Co.	EPCM No.	APPD.
1	2011.11.18	RTU PANEL CONSTRUCTION	.	TBD	MAC ENG.	2011-0132	
.	–	.	.	.	.	.	.
.	–	.	.	.	.	.	.
.	–	.	.	.	.	.	.
.	–	.	.	.	.	.	.
.	–	.	.	.	.	.	.
.	–	.	.	.	.	.	.
.	–	.	.	.	.	.	.
.	–	.	.	.	.	.	.

REV. NUMBER 1B-1	ISSUE STAGE	DATE (YYYY-MM-DD)	BY	CHKD.	APPD.
	Prelim.	–	.	.	.
	Bid	2011.11.18	.	.	.
	Constr.	–	.	.	.
	As-built	–	.	.	.
	Standard	–	.	.	.
	.	–	.	.	.
	.	–	.	.	.
	.	–	.	.	.

PERMIT STAMP | ENGINEER'S STAMP

PERMIT STAMP AND PROFESSIONAL STAMP AFFIXED ABOVE SHALL APPLY ONLY TO REV(s) 1B-1

encana. natural gas

MAIN FAC. BIGHORN TYPICALS
MAIN LOC. VARIES
CAP. CAMP PAD SITE
SUB LOC. VARIES
SCALE 1:250 (A1 Size)
EPCM No. 2011-0132

EPCM MAC ENGINEERING INC.

TITLE ELECTRICAL PLOT PLAN
CABLE ROUTING AND GROUDING

AREA BIGHORN BU | CLASS N | FILE NO. BHT0148C

PLOTTED: 18/11/2011 9:21:04 AM, BY: DAVID SIN
LAST SAVED: 18/11/2011 9:20:28 AM BY: DSIN
March 24, 2011 9:50:04 a.m.
Drawing: C:\EAD\ENCANA\12218-01\C-TMP-DWGS\BHT0144C.DWG TAB NAME: MODEL
Xrefs:
Date and Time Saved: 2011-02-04, 8:13 AM

Drawings Must Comply with Encana Drafting Standards (ECA-DDM-S-01)

FILE: Y:\PROJECTS\2011\2011-0132 - ENCANA 2012 METER SKID RFQ RTU PANEL DESIGN\DRAWINGS\ELECTRICAL\ISSUED FOR BID\BHT0148C.DWG

CABLE/CONDUIT & WIRE SCHEDULE

MF MAIN FEEDER (4160V)
F POWER FEEDER (480, 600V)
SF SERVICE FEEDER (MCC TO MCC)
NGR NEUTRAL GROUND RESISTOR

PC POWER AND CONTROL
P POWER
C CONTROL
LP LIGHTING POWER (120, 208V)

AS ALARM AND SHUTDOWN
TX ANALOG
RTD RESISTANCE TEMPERATURE DETECTOR
TC THERMOCOUPLE

COM COMMUNICATION, MODBUS
T TELEPHONE

FGD FIRE & GAS DETECTION
FD FIRE DETECTION
GD GAS\H2S DETECTION

DUCT PVC DUCT
SP SPARE

CABLE/ CONDUIT NO.	LOAD HP	LOAD VOLTAGE	RUN FROM	RUN TO	ROUTING SIZE/TYPE	CONDUCTORS TOTAL NO.	CONDUCTORS SIZE	CONDUCTORS INSULATION	CONDUCTORS VOLTAGE	REMARKS
P-100.1	-	24VDC	SOLAR PANEL	RTU PANEL U-301 METER BUILDING	TRAY	2	#10	TECK 90	600V	RTU PANEL POWER U-301 METER BUILDING
-	-	-	.	.	-	-	-	-	-	.
COAX	-	-	MDS SD4 RADIO	ANTENNA	TRAY			COAX	300V	
PT-3010	-	4-20mA	RTU PANEL U-301 METER BUILDING	PT-3010	TRAY	1PR	#16 INDIV. SHLD. ARMD. INSTR CABLE		300V	U-301 METER BUILDING (XX-XX BH)
PT-3011	-	4-20mA	RTU PANEL U-301 METER BUILDING	PT-3011	TRAY	1PR	#16 INDIV. SHLD. ARMD. INSTR CABLE		300V	U-301 METER BUILDING (XX-XX BH)
EY-3010	-	24VDC	RTU PANEL U-301 METER BUILDING	EY-3011	TRAY	4	#14	TECK 90	600V	U-301 METER BUILDING (XX-XX BH)
-	-	-	.	.	-	-	-	-	-	.
PT-3110	-	4-20mA	RTU PANEL U-301 METER BUILDING	PT-3110	TRAY	1PR	#16 INDIV. SHLD. ARMD. INSTR CABLE		300V	U-301 METER BUILDING (XX-XX BH)
PT-3111	-	4-20mA	RTU PANEL U-301 METER BUILDING	PT-3111	TRAY	1PR	#16 INDIV. SHLD. ARMD. INSTR CABLE		300V	U-301 METER BUILDING (XX-XX BH)
EY-3110	-	24VDC	RTU PANEL U-301 METER BUILDING	EY-3110	TRAY	4	#14	TECK 90	600V	U-301 METER BUILDING (XX-XX BH)
-	-	-	.	.	-	-	-	-	-	.
PT-3210	-	4-20mA	RTU PANEL U-311 METER BUILDING	PT-3210	TRAY	1PR	#16 INDIV. SHLD. ARMD. INSTR CABLE			U-311 METER BUILDING (XX-XX BH)
PT-3211	-	4-20mA	RTU PANEL U-311 METER BUILDING	PT-3211	TRAY					U-311 METER BUILDING (XX-XX BH)
EY-3210	-	24VDC	RTU PANEL U-311 METER BUILDING	EY-3210	TRAY	4	#14	TECK 90	600V	U-311 METER BUILDING (XX-XX BH)

CABLE/CONDUIT & WIRE SCHEDULE

MF MAIN FEEDER (4160V)
F POWER FEEDER (480, 600V)
SF SERVICE FEEDER (MCC TO MCC)
NGR NEUTRAL GROUND RESISTOR

PC POWER AND CONTROL
P POWER
C CONTROL
LP LIGHTING POWER (120, 208V)

AS ALARM AND SHUTDOWN
TX ANALOG
RTD RESISTANCE TEMPERATURE DETECTOR
TC THERMOCOUPLE

COM COMMUNICATION, MODBUS
T TELEPHONE

FGD FIRE & GAS DETECTION
FD FIRE DETECTION
GD GAS\H2S DETECTION

DUCT PVC DUCT
SP SPARE

CABLE/ CONDUIT NO.	LOAD HP	LOAD VOLTAGE	RUN FROM	RUN TO	CONDUIT SIZE/TYPE	CONDUCTORS TOTAL NO.	CONDUCTORS SIZE	CONDUCTORS INSULATION	CONDUCTORS VOLTAGE	REMARKS

REFERENCE DRAWINGS	DWG. NO.
.	.
.	.
.	.
.	.

CAUTION : READ BEFORE EXCAVATION

ALL EXCAVATIONS MUST BE CARRIED OUT AS PER "ENCANA'S GROUND DISTURBANCE PRACTICE"

NO.	DATE (YYYY-MM-DD)	PROJECT DESCRIPTION	PROJ.	AFE	EPCM Co.	EPCM No.	APPD.
1	2011.11.18	RTU PANEL CONSTRUCTION	-	TBD	MAC ENG.	2011-0132	.
.	-	.	-	.	.	.	.
.	-	.	-	.	.	.	.
.	-	.	-	.	.	.	.
.	-	.	-	.	.	.	.
.	-	.	-	.	.	.	.
.	-	.	-	.	.	.	.
.	-	.	-	.	.	.

NOTE: Use only one Project Description line per project.

ISSUE STAGE	DATE (YYYY-MM-DD)	BY	CHKD.	APPD.
Prelim. (A)	-	-	-	-
Bid (B1)	2011.11.18	DS	-	-
Constr. (C)	-	-	-	-
As-Built (D)	-	-	-	-
-	-	-	-	-
-	-	-	-	-
-	-	-	-	-
-	-	-	-	-

REV.NUMBER 1B-1

A=Approval, B=Bid, C=Constr., D=As-Built
eg. 1A-1 (Rev.1, Issue Stage A - 1st Issue)

PERMIT STAMP

ENGINEER'S STAMP

PERMIT STAMP AND PROFESSIONAL STAMP AFFIXED ABOVE SHALL APPLY ONLY TO REV(s) 1B-1

encana natural gas

BUSINESS FAC. BIGHORN TYPICALS
MAIN LOC. VARIES
FAC. TYPE PAD SITE
SITE LOC. VARIES
SCALE N.T.S. (A1 Size)
EPCM No. 2011-0132
EPCM CO. MAC ENGINEERING INC.
TITLE CABLE AND CONDUIT SCHEDULE
AREA BIGHORN BU
CLASS N
FILE NO. BHT0148E

Note: Area Name, Main Facility Name, and Location must exactly match ODMS.

Date and Time Saved: 2010-11-09, 5:40 PM

Drawings Must Comply with Encana Drafting Standards (ECA-DDM-S-01)

PLOTTED: 11/18/2011 1:23:57 PM BY: ROZA KUMOVA
LAST SAVED: 11/18/2011 1:23:49 PM BY: DSIN
February 23, 2011 9:43:08 a.m.
Drawing: Q:\DGN\ENCANA\12220-A\W02342A.DWG TAB NAME: MODEL
Note: eng-permit.dwg, eng-plot.cfg
I-ISSUING (DGN/A1 Size Title Block) v7

FILE: Y:\PROJECTS\2011\2011-0132 - ENCANA 2012 METER SKID RFQ RTU PANEL DESIGN\DRAWINGS\ELECTRICAL\ISSUED FOR BID\BHT0148E_2.DWG

Date and Time Saved:

TOP VIEW

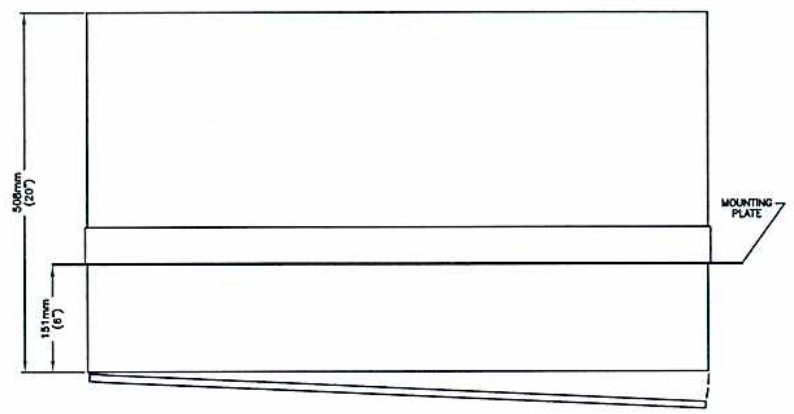

BOTTOM VIEW

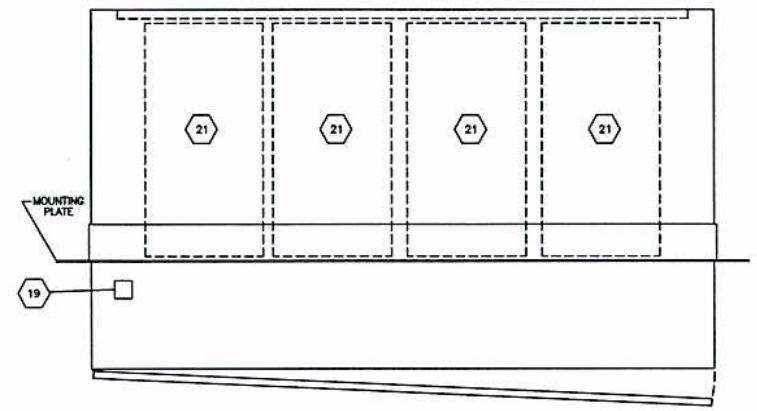

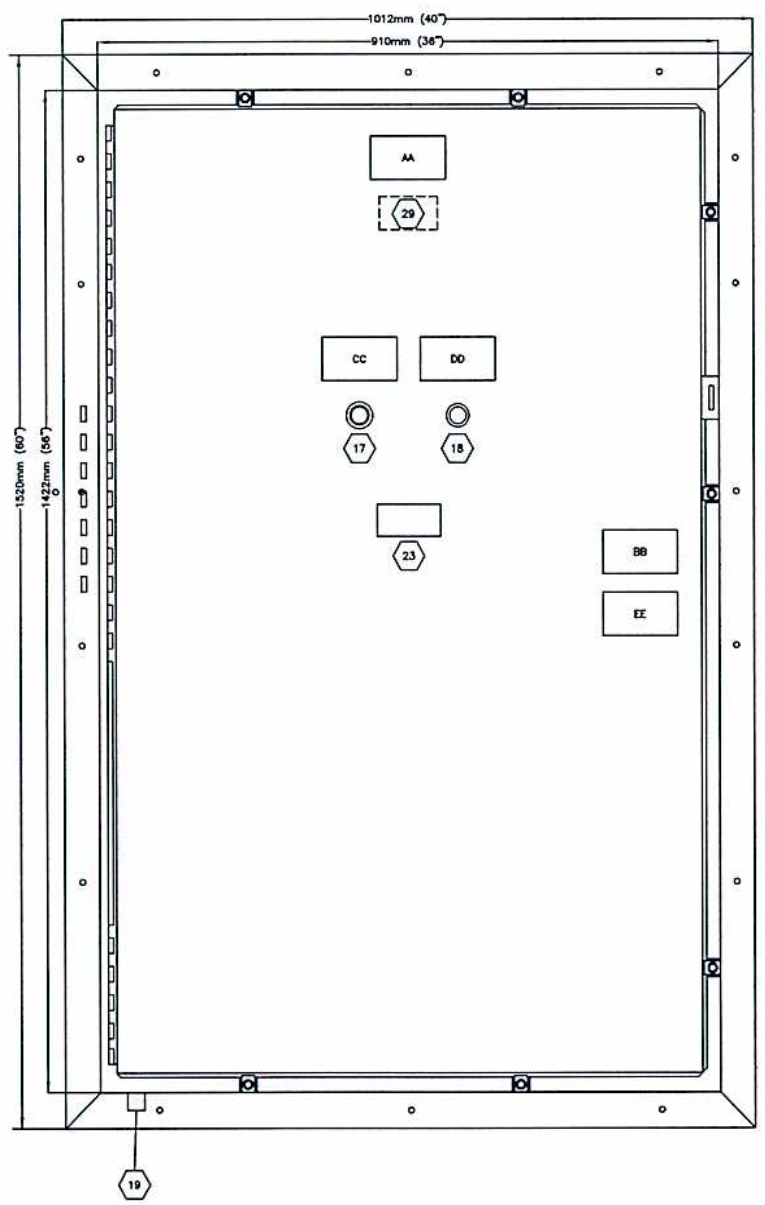

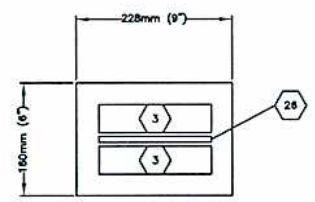

LEFT SIDE INTERIOR VIEW

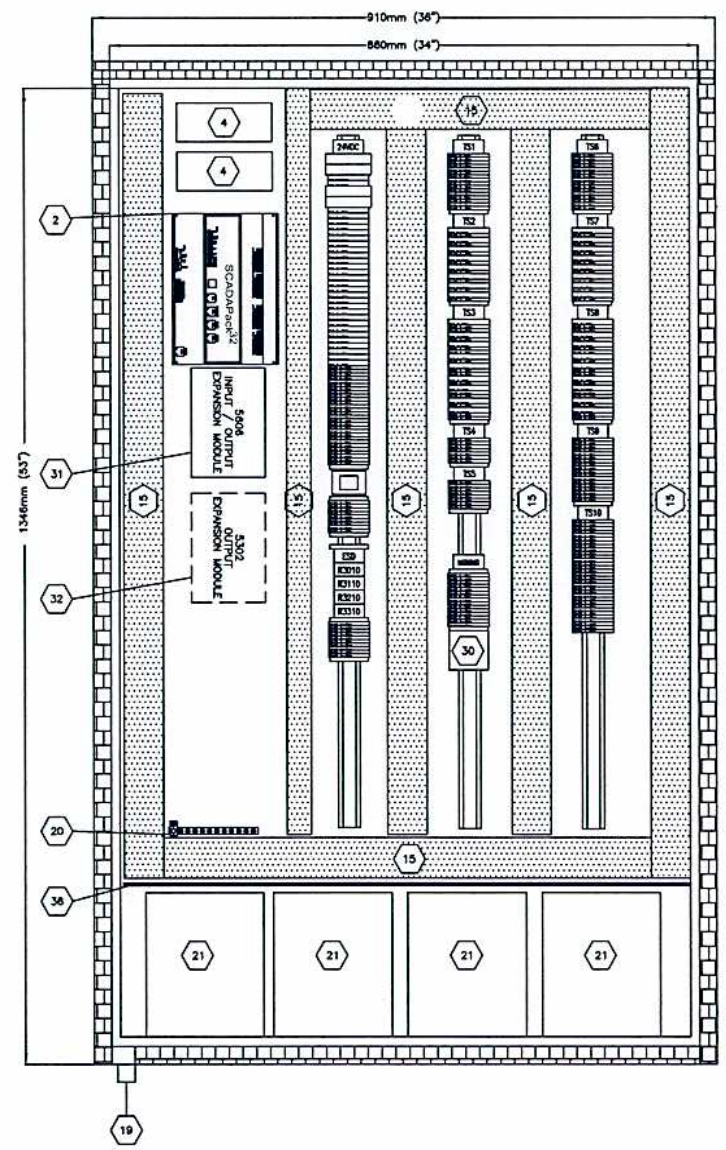

RTU CONTROL PANEL (TYPICAL)

1. RTU PANEL LAYOUT AND DESIGN BY OTHERS. PANEL TO BE CSA APPROVED FOR CLASS 1, ZONE 2 GROUP IIA, TEMP CODE T2C. PANEL TO BEAR APPROVAL AND CLASSIFICATION RATING.

REFERENCE DRAWINGS	DWG. NO.

CAUTION : READ BEFORE EXCAVATION

ALL EXCAVATIONS MUST BE CARRIED OUT AS PER "ENCANA'S GROUND DISTURBANCE PRACTICE"

NO.	DATE (YYYY-MM-DD)	PROJECT DESCRIPTION	PROJ.	AFE	EPCM Co.	EPCM No.	APPD.
1	2011.11.18	RTU PANEL CONSTRUCTION	–	TBD	MAC ENG.	2011-0132	·
·	–	·	–	·	·	·	·
·	–	·	–	·	·	·	·
·	–	·	–	·	·	·	·
·	–	·	–	·	·	·	·
·	–	·	–	·	·	·	·
·	–	·	–	·	·	·	·
·	–	·	–	·	·	·	·

REV. NUMBER 1B-1 ISSUE STAGE	DATE (YYYY-MM-DD)	BY	CHKD.	APPD.
Prelim. (A)	–	–	–	–
Bid (B)	2011.11.18	DS	–	–
Constr. (C)	–	–		
As-built (D)	–	–	–	–
–		–	–	–
–	–	–	–	–
–	–	–	–	–
–	–	–	–	–

PERMIT STAMP ENGINEER'S STAMP

PERMIT STAMP AND PROFESSIONAL STAMP AFFIXED ABOVE SHALL APPLY ONLY TO REV(s) 1B-1

encana natural gas

MAIN FAC.	BIGHORN TYPICALS
MAIN LOC.	VARIES
FAC. TYPE	PAD SITE
SITE LOC.	VARIES
SCALE	N.T.S (AI Size)
EPCM No.	2011-0044

EPCM Co. MAC ENGINEERING INC.

TITLE RTU CONTROL PANEL – SCADAPACK 32 PANEL LAYOUT

AREA BIGHORN BU | CLASS N | FILE NO. BHT0148F

PLOTTED: 18/11/2011 1:18:55 PM. BY:
LAST SAVED: BY:

Drawings Must Comply with Encana Drafting Standards (ECA-DDM-S-01)

CONTROL PANEL BILL OF MATERIALS

ITEM	QTY	MODEL No.	MANUFACTURER	DESCRIPTION
1	1	CUSTOM	ACE MFG. (OR EQUAL)	ENCLOSURE – WALL INSERT NEMA TYPE 4, ALLUMINUM C/W BAKC PANEL & DATA POCKET ENCLOSURE DIMENSIONS – 1422mmH x 910mmW x 508mmD BACK PANEL DIMENSIONS – 1346mmH x 860mmW SIDE PANEL DIMENSIONS –
2	1	P4A-1T0-01-0-1	CONTROL MICROSYSTEMS	SCADAPACK 32 SYSTEM C/W 2 AO OPTION
3	2	IF6240	G.E.	MDS TRANSCEIVER RADIO (SD4B) c/w WRING HARNESSS (OWNER SUPPLIED)
4	2	SS-20L-24V	MORNINGSTAR CORPORATION	SUN SAVER SOLAR CHARGE CONTROLLER
5	–	–	–	–
6	A/R	WSI-6 TYPE 101100	WEIDMULLER	TERMINAL BLOCK, FUSED TYPE
7	A/R	WDU-2.5 TYPE 102000	WEIDMULLER	FEED THROUGN TERMINAL BLOCK, FUSED TYPE
8	1	–	–	25 PIN RJ45 RADIO CABLE TO SCADA 32.
9	5	M44HUS-DC24 C/W PTF14 A-E	OMRON	24VDC RELAY, 4-POLE, C/W BASE FOR RESD, R3010, R3110, R3210, R3310
10	A/R	IN4007	–	DIODE
11	A/R	SCHT 5	WEIDMULLER	GROUP TAG CARRIER
12	A/R	WAP-2.5 TYPE 105000	WEIDMULLER	END PLATE
13	A/R	WEW-35/2 TYPE 106120	WEIDMULLER	END STOP
14	A/R	–	WEIDMULLER	TERMINAL RAIL ASSEMBLY – WEIDMULLER TS-35 RAIL C/W END CLAMPS
15	A/R	–	–	PVC WIRE DUCT 50mmW x 75mmD DC=WHITE c/w OUTLET BOX AND METAL COVER
16	A/R	WTR-2.5	WEIDMULLER	DISCONNECT TERMINAL
17	1	800T-D1 800T-N129	ALLEN-BRADLEY	MOMENTARY PUSHBUTTON SWTCH c/w CONTACT BLOCKS AS PER SCHEMATIC (OR APPROVED EQUAL)
18	1	800H-DR6A4P	ALLEN-BRADLEY	MOMENTARY PUSHBUTTON SWTCH, JUMBO MUSHROOM HEAD c/w 800T-N310 GUARD (OR APPROVED EQUAL)
19	1	–	–	POLYPHASER LIGHTNING ARRESTOR
20	A/R	–	–	COPPER GROUND BUS
21	4	SLA12-100	MAGNA-CHARGE	BATTERY, 110AH (OWNER SUPPLIED)
22	4	BP3125	BP	SOLAR PANEL (OWNER SUPPLIED)
23	1	297361	–	SCADAPACK VISION 60 – 4 LINE DISPLAY c/w METAL COVER PLATE (297458)
24	1	297237	–	SCADAPACK VISION CABLE, 5 FT
25	A/R	WDU-4	WEIDMULLER	FEED THROUGH TERMINAL
26	1	–	–	HORIZONTAL MOUNTING BRACKET
27	1	–	–	RADIO ANTENNA (OWNER SUPPLIED)
28	1	NF-RG58/38-NF	–	POLYPHASER JUMPER FROM RADIO TO CABINET
29	1	–	–	CSA OR EQUAL APPROVAL CLASS 1 ZONE 2 AS AN ASSEMBLY

CONTROL PANEL BILL OF MATERIALS

ITEM	QTY	MODEL No.	MANUFACTURER	DESCRIPTION
30	1	31111	TECHSPAN	FUSE HOLDER, 30A
31	1	297334	CONTROL MICROSYSTEMS	MIXED INPUT/OUTPUT EXPANSION MODULE (5606) WITH AO MODULE OPTION (5606-24-AO)
32	1	297176	CONTROL MICROSYSTEMS	ANALOG OUTPUT EXPANSION MODULE (5302) (FUTURE)
33	A/R	MS-3	BLACK BOX	MULTIPLEXER, 4 PORT
34	1	WSI-6/2 TYPE 101410	WEIDMULLER	FUSE BLOCK c/w FUSE INDICATOR 6634.0 AND FUSES, AS PER SCHEMATICS
35	16	PART # 8533640000	WEIDMULLER	MRS RELAY, 24VDC, 1 CO CONTACT
36	1	N/A	SKID VENDOR	REMOVEVABLE PLASTIC BARRIER COVER FOR BATTERIES
37	4	WSI-25/1 1966060000	WEIDMULLER	FUSE BLOCK, C/W FUSE INDICATOR FUSES AS PER SCHEMATICS

CONTROL PANEL ENGRAVING SCHEDULE

PLATE No.	LEGEND	SIZE (mm) W x H x LETTER	COLOR (PLATE/LETTERS)
AA	RTU CONTROL PANEL	A/R	BLACK/WHITE
BB	ENTRY BY AUTHORIZED PERSONNEL ONLY	A/R	WHITE/RED
CC	PLANT RESET HS-101	A/R	WHITE/BLACK
DD	PLANT ESD HS-102	A/R	WHITE/BLACK
EE	SEE DETAIL 'A' BELOW	A/R	WHITE/RED

ENSURE THERE IS NO EXPLOSIVE MIXTURE PRESENT IN THE AREA PRIOR TO AND DURING THE COURSE OF ANY MAINTENANCE PROCEDURES UNDERTAKEN IN THIS ENCLOSURE

DETAIL 'A'

RTU CONTROL PANEL BILL OF MATERIAL (TYPICAL)

1. RTU PANEL LAYOUT AND DESIGN BY OTHERS. PANEL TO BE CSA APPROVED FOR CLASS 1, ZONE 2 GROUP IIA, TEMP CODE T2C. PANEL TO BEAR APPROVAL AND CLASSIFICATION RATING.

REFERENCE DRAWINGS	DWG. NO.
.	.
.	.
.	.
.	.

CAUTION : READ BEFORE EXCAVATION

ALL EXCAVATIONS MUST BE CARRIED OUT AS PER "ENCANA'S GROUND DISTURBANCE PRACTICE"

NO.	DATE (YYYY-MM-DD)	PROJECT DESCRIPTION	PROJ.	AFE	EPCM Co.	EPCM No.	APPD.
1	2011.11.18	RTU PANEL CONSTRUCTION	–	TBD	MAC ENG.	2011-0132	.
.	–	.	–	.	.	.	.
.	–	.	–	.	.	.	.
.	–	.	–	.	.	.	.
.	–	.	–	.	.	.	.
.	–	.	–	.	.	.	.
.	–	.	–	.	.	.	.
.	–	.	–	.	.	.	.

REV.NUMBER 1B-1 ISSUE STAGE	DATE (YYYY-MM-DD)	BY	CHK'D.	APPD.
Prelim.	–	–	–	–
Bid (B1)	2011.11.18	–	–	–
Constr.	–	–		
As-Built	–	–	–	–
–	.	–	–	–
–	–	–	–	–
–	–	–	–	–
–	–	–	–	–

PERMIT STAMP

ENGINEER'S STAMP

PERMIT STAMP AND PROFESSIONAL STAMP AFFIXED ABOVE SHALL APPLY ONLY TO REV(s) 1B1

encana natural gas

MAB FAC.	BIGHORN TYPICALS
MAB LSD.	VARIES
FAC. TYPE	PAD SITE
SITE LSD.	VARIES
SCALE	N.T.S. (A1 Size)
EPCM No.	2011-0132
EPCM Co.	MAC ENGINEERING INC.
TITLE	RTU CONTROL PANEL – SCADAPACK 32 BILL OF MATERIAL AND NAME PLATE SCHEDULE
AREA	BIGHORN BU
CLASS	N
FILE NO.	BHT0148G

Date and Time Saved: 2010-11-17, 11:52 AM

Drawings Must Comply with Encana Drafting Standards (ECA-DDM-S-01)

PLOTTED: 18/11/2011 1:32:10 PM, BY: DAVID SIN
LAST SAVED: 18/11/2011 1:32:05 PM BY: DSIN
February 15, 2011 4:40:18 p.m.
Drawing: Q:\CAD\DRAWN\12215-B\E-TMP-DWGS\RRK-12215-E-TMP-058.DWG TAB NAME: MODEL
Xrefs:
1-MODELINE (BROWN, A1 Bar Title Block) v7

FILE: Y:\PROJECTS\2011\2011-0132 - ENCANA 2012 METER SKID RFQ RTU PANEL DESIGN\DRAWINGS\ELECTRICAL\ISSUED FOR BID\BHT0148G.DWG

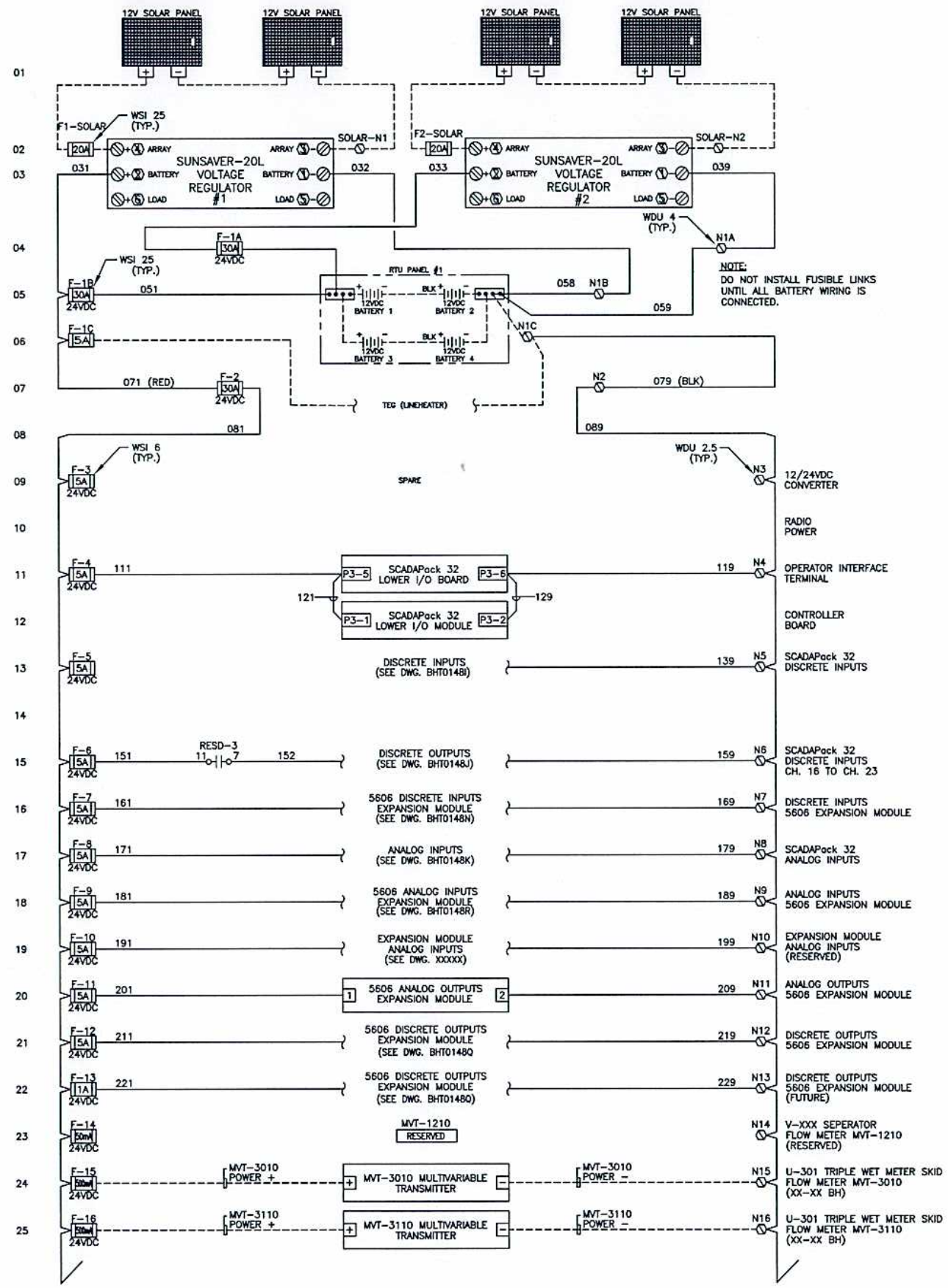

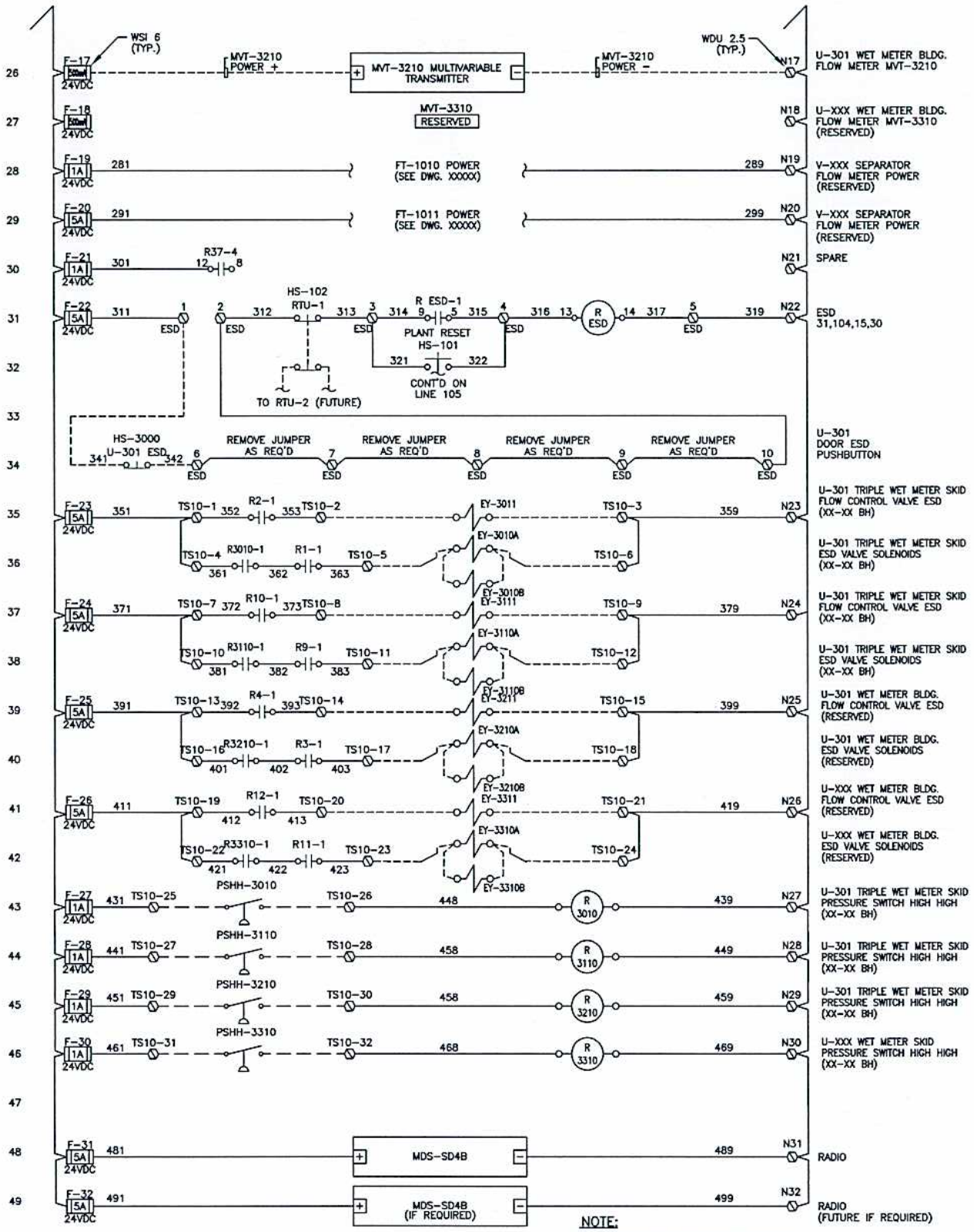

NOTE:
SINGLE CONDUCTORS: #14 AWG RW90 XLPE
PAIR CONDUCTORS: #16 AWG RW90 XLPE
– INDIVIDUALLY SHIELDED PAIRS
TRIAD CONDUCTORS: #16 AWG RW90 XLPE
– INDIVIDUALLY SHIELDED TRIADS

TERMINAL BLOCK LEGEND
- △ CONTACTOR PANEL DC TERMINAL
- ▲ CONTACTOR PANEL AC TERMINAL
- PLC PANEL FUSED DC TERMINAL
- ☒ VFD TERMINAL
- □ PLC PANEL DC TERMINAL
- ■ PLC PANEL AC TERMINAL
- ◪ FIELD JUNCTION BOX TERMINAL
- ○ MCC DC TERMINAL
- ● MCC AC TERMINAL

REFERENCE DRAWINGS	DWG. NO.
.	.
.	.
.	.
.	.

CAUTION : READ BEFORE EXCAVATION
ALL EXCAVATIONS MUST BE CARRIED OUT AS PER "ENCANA'S GROUND DISTURBANCE PRACTICE"

NO.	DATE (YYYY-MM-DD)	PROJECT DESCRIPTION	PROJ.	AFE	EPCM Co.	EPCM No.	APPD.
1	2011.11.18	RTU PANEL CONSTRUCTION	–	TBD	MAC ENG.	2011-0132	.
.	–	.	–	.	.	.	.
.	–	.	–	.	.	.	.
.	–	.	–	.	.	.	.
.	–	.	–	.	.	.	.
.	–	.	–	.	.	.	.
.	–	.	–	.	.	.	.
.	–	.	–	.	.	.	.

REV.NUMBER 1B-1 ISSUE STAGE		DATE (YYYY-MM-DD)	BY	CHKD.	APPD.
Prelim.	(A)	–	–	–	–
Bid	(B)	2011.11.18	DS	–	–
Constr.	(C)	–	–		
As-Built	(D)	–	–	–	–
–		.	–	–	–
–		–	–	–	–
–		–	–	–	–
–		–	–	–	–

PERMIT STAMP | ENGINEER'S STAMP

PERMIT STAMP AND PROFESSIONAL STAMP AFFIXED ABOVE SHALL APPLY ONLY TO REV(s) 1B-1

encana. natural gas

MAP FAC.	BIGHORN TYPICALS
MAIN LOC.	VARIES
FAC TYPE	PAD SITE
SITE LOC.	VARIES
SCALE	N.T.S. (A1 Size)
EPCM No.	2011-0132

EPCM MAC ENGINEERING INC.

TITLE RTU CONTROL PANEL – SCADAPACK 32 24VDC POWER DISTRIBUTION

AREA BIGHORN BU | CLASS N | FILE NO. BHT0148H

Date and Time Saved: 2010-11-17, 1:07 PM

Drawings Must Comply with Encana Drafting Standards (ECA-DDM-S-01)

PLOTTED: 18/11/2011 1:24:44 PM, BY: DAVID SIN
LAST SAVED: 18/11/2011 1:24:37 PM BY: DSIN

FILE: Y:\PROJECTS\2011\2011-0132 - ENCANA 2012 METER SKID RFQ RTU PANEL DESIGN\DRAWINGS\ELECTRICAL\ISSUED FOR BID\BHT0148H.DWG

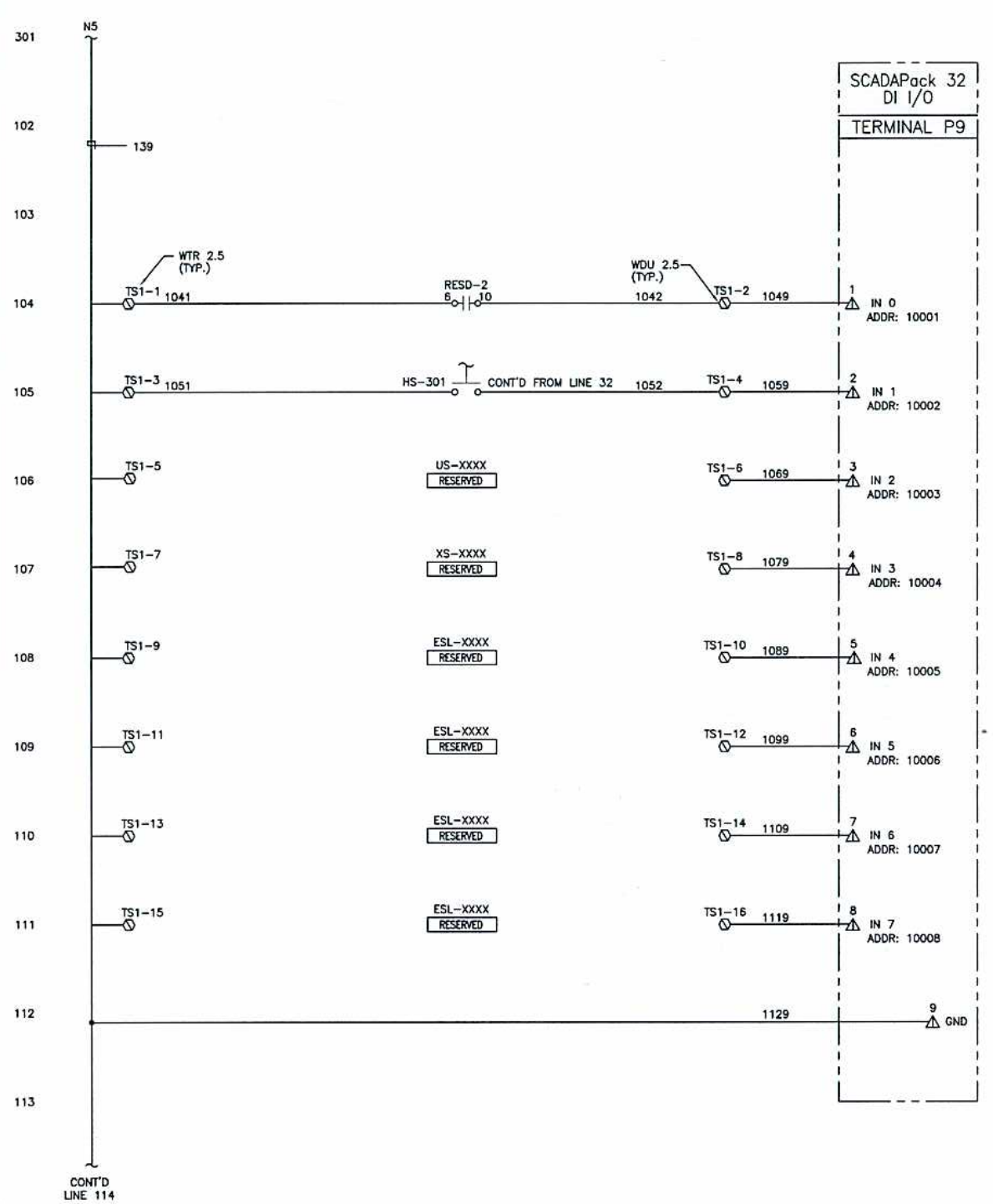

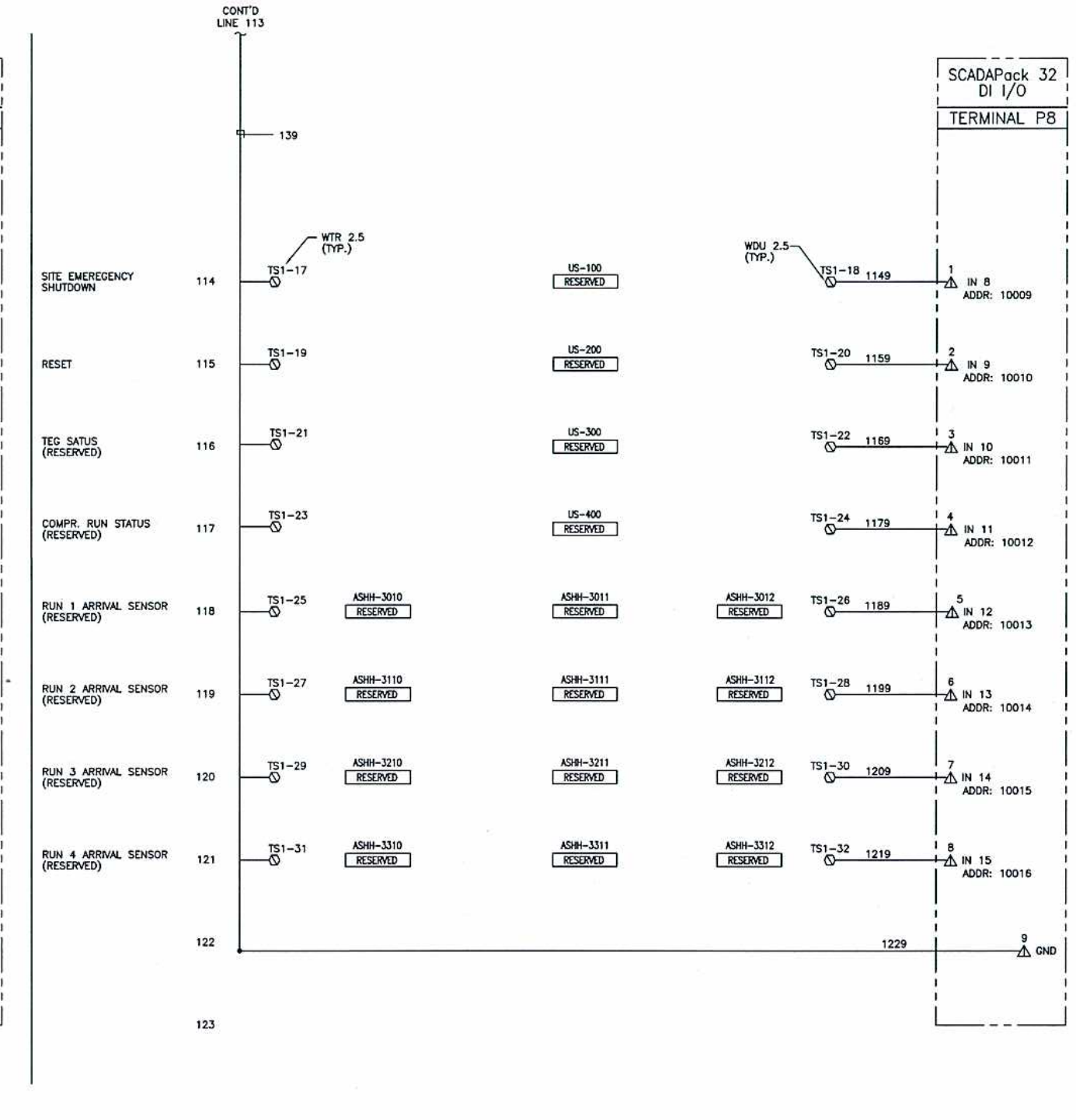

NOTE:
SINGLE CONDUCTORS: #14 AWG RW90 XLPE
PAIR CONDUCTORS: #16 AWG RW90 XLPE
– INDIVIDUALLY SHIELDED PAIRS
TRIAD CONDUCTORS: #16 AWG RW90 XLPE
– INDIVIDUALLY SHIELDED TRIADS

TERMINAL BLOCK LEGEND
- PLC PANEL DC TERMINAL
- PLC PANEL AC TERMINAL
- FIELD JUNCTION BOX TERMINAL
- MCC DC TERMINAL
- MCC AC TERMINAL
- CONTACTOR PANEL DC TERMINAL
- CONTACTOR PANEL AC TERMINAL
- PLC PANEL FUSED DC TERMINAL
- VFD TERMINAL

REFERENCE DRAWINGS	DWG. NO.
.	.
.	.
.	.
.	.

CAUTION : READ BEFORE EXCAVATION
ALL EXCAVATIONS MUST BE CARRIED OUT AS PER "ENCANA'S GROUND DISTURBANCE PRACTICE"

NO.	DATE (YYYY-MM-DD)	PROJECT DESCRIPTION	PROJ.	AFE	EPCM Co.	EPCM No.	APPD.
1	2011.11.18	RTU PANEL CONSTRUCTION	–	TBD	MAC ENG.	2011-0132	.
.	–	.	–	.	.	.	.
.	–	.	–	.	.	.	.
.	–	.	–	.	.	.	.
.	–	.	–	.	.	.	.
.	–	.	–	.	.	.	.
.	–	.	–	.	.	.	.
.	–	.	–	.	.	.	.

REV.NUMBER 1B-1	ISSUE STAGE	DATE (YYYY-MM-DD)	BY	CHKD.	APPD.
	Prelim. (A)	–	–	–	–
	Bid (B1)	2011.11.18	–	–	–
	Constr. (C)	–	–	–	–
	As-Built (D)	–	–	–	–
	–	–	–	–	–
	–	–	–	–	–
	–	–	–	–	–
	–	–	–	–	–

PERMIT STAMP | ENGINEER'S STAMP

PERMIT STAMP AND PROFESSIONAL STAMP AFFIXED ABOVE SHALL APPLY ONLY TO REV(s) 1B-1

encana natural gas

MAIN FAC.	BIGHORN TYPICALS
MAIN LOC.	VARIES
FAC. TYP.	PAD SITE
SITE LOC.	VARIES
SCALE	N.T.S. (A1 Size)
EPCM No.	2011-0132

EPCM Co. MAC ENGINEERING INC.

TITLE RTU CONTROL PANEL – SCADAPACK 32 DISCRETE INPUT I/O SCHEMATIC

AREA BIGHORN BU | CLASS N | FILE NO. BHT0148I

Date and Time Saved: 2010-11-17, 4:36 PM

Drawings Must Comply with Encana Drafting Standards (ECA-DDM-S-01)

PLOTTED: 18/11/2011 12:37:29 PM, BY: GENNADIY KLIMOV
LAST SAVED: 18/11/2011 12:37:16 PM BY: GKLIMOV
February 15, 2011 4:40:06 p.m.
Drawing: O:\ECAD\ENCANA\1218-E\E-TMP-DWGS\RRK-12218-E-TMP-07A.DWG TAB NAME: MODEL
Xrefs: eng-perm2.dwg, eng-jvc.dwg

FILE: Y:\PROJECTS\2011\2011-0132 - ENCANA 2012 METER SKID RFQ RTU PANEL DESIGN\DRAWINGS\ELECTRICAL\ISSUED FOR BID\BHT0148I.DWG

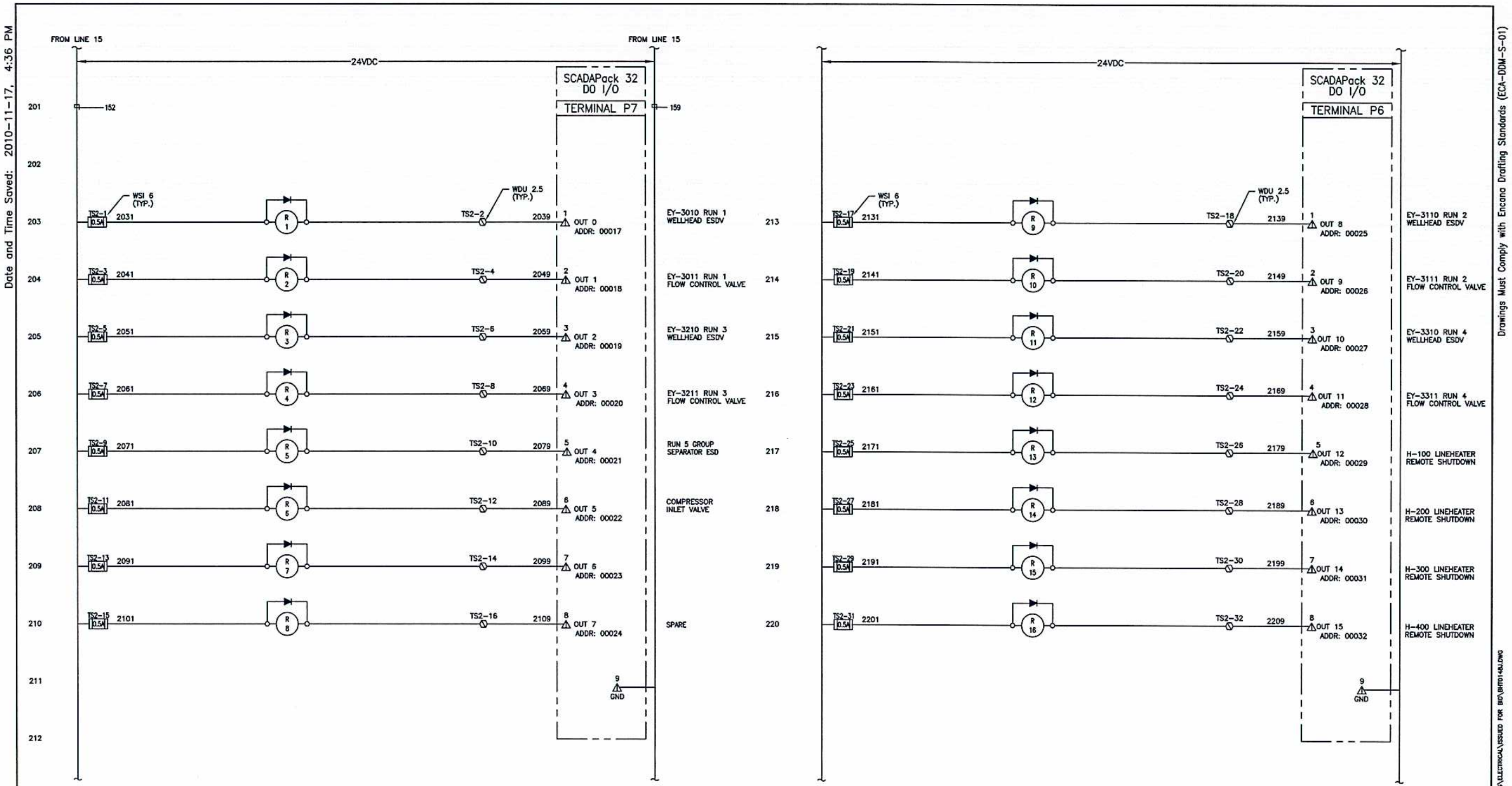

NOTE:
SINGLE CONDUCTORS: #14 AWG RW90 XLPE
PAIR CONDUCTORS: #16 AWG RW90 XLPE
– INDIVIDUALLY SHIELDED PAIRS
TRIAD CONDUCTORS: #16 AWG RW90 XLPE
– INDIVIDUALLY SHIELDED TRIADS

TERMINAL BLOCK LEGEND
- PLC PANEL DC TERMINAL
- PLC PANEL AC TERMINAL
- FIELD JUNCTION BOX TERMINAL
- MCC DC TERMINAL
- MCC AC TERMINAL
- CONTACTOR PANEL DC TERMINAL
- CONTACTOR PANEL AC TERMINAL
- PLC PANEL FUSED DC TERMINAL
- VFD TERMINAL

REFERENCE DRAWINGS	DWG. NO.
.	.
.	.
.	.
.	.

CAUTION : READ BEFORE EXCAVATION
ALL EXCAVATIONS MUST BE CARRIED OUT AS PER "ENCANA'S GROUND DISTURBANCE PRACTICE"

NO.	DATE (YYYY-MM-DD)	PROJECT DESCRIPTION	PROJ.	AFE	EPCM Co.	EPCM No.	APPD.
1	2011.11.18	RTU PANEL CONSTRUCTION	–	TBD	MAC ENG.	2011–0132	.
.	–	.	–	.	.	.	.
.	–	.	–	.	.	.	.
.	–	.	–	.	.	.	.
.	–	.	–	.	.	.	.
.	–	.	–	.	.	.	.
.	–	.	–	.	.	.	.
.	–	.	–	.	.	.	.
.	–	.	–	.	.	.	.

REV.NUMBER 1B–1 ISSUE STAGE	DATE (YYYY-MM-DD)	BY	CHKD.	APPD.
Prelim. (A)	–	–	–	–
Bid (B1)	2011.11.18	DS	–	–
Constr. (C)	–	–		
As–Built (D)	–	–	–	–
–	.	–	–	–
–	–	–	–	–
–	–	–	–	–
–	–	–	–	–

PERMIT STAMP | ENGINEER'S STAMP

PERMIT STAMP AND PROFESSIONAL STAMP AFFIXED ABOVE SHALL APPLY ONLY TO REV(s) 1B–1

encana natural gas

MAIN FAC.	BIGHORN TYPICALS
MAIN LOC.	VARIES
FOR CMP.	PAD SITE
FOR LOC.	VARIES
SCALE	N.T.S. (A1 Size)
EPCM No.	2011–0132

EPCM Co. MAC ENGINEERING INC.

TITLE RTU CONTROL PANEL – SCADAPACK 32 DISCRETE OUTPUT I/O SCHEMATIC

AREA BIGHORN BU | CLASS N | FILE NO. BHT0148J

Date and Time Saved: 2010–11–17, 4:36 PM

Drawings Must Comply with Encana Drafting Standards (ECA–DDM–S–01)

PLOTTED: 18/11/2011, 8:24:09 AM, BY: DAVID SIN
LAST SAVED: 2011–11–17, 7:52:31 PM BY: DSIN
FIRST SAVED: 2011–11–02, 1:44:20 PM
Drawing: O:\EAD\ENCANA\12218–B\E–TUP–DWGS\RRK–12218–E–TUP–07B.DWG TAB NAME: MODEL
Xrefs: eng–perm2.dwg, eng–jxc.dwg

FILE: Y:\PROJECTS\2011\2011–0132 – ENCANA 2012 METER SKID RFQ RTU PANEL DESIGN\DRAWINGS\ELECTRICAL\ISSUED FOR BID\BHT0148J.DWG

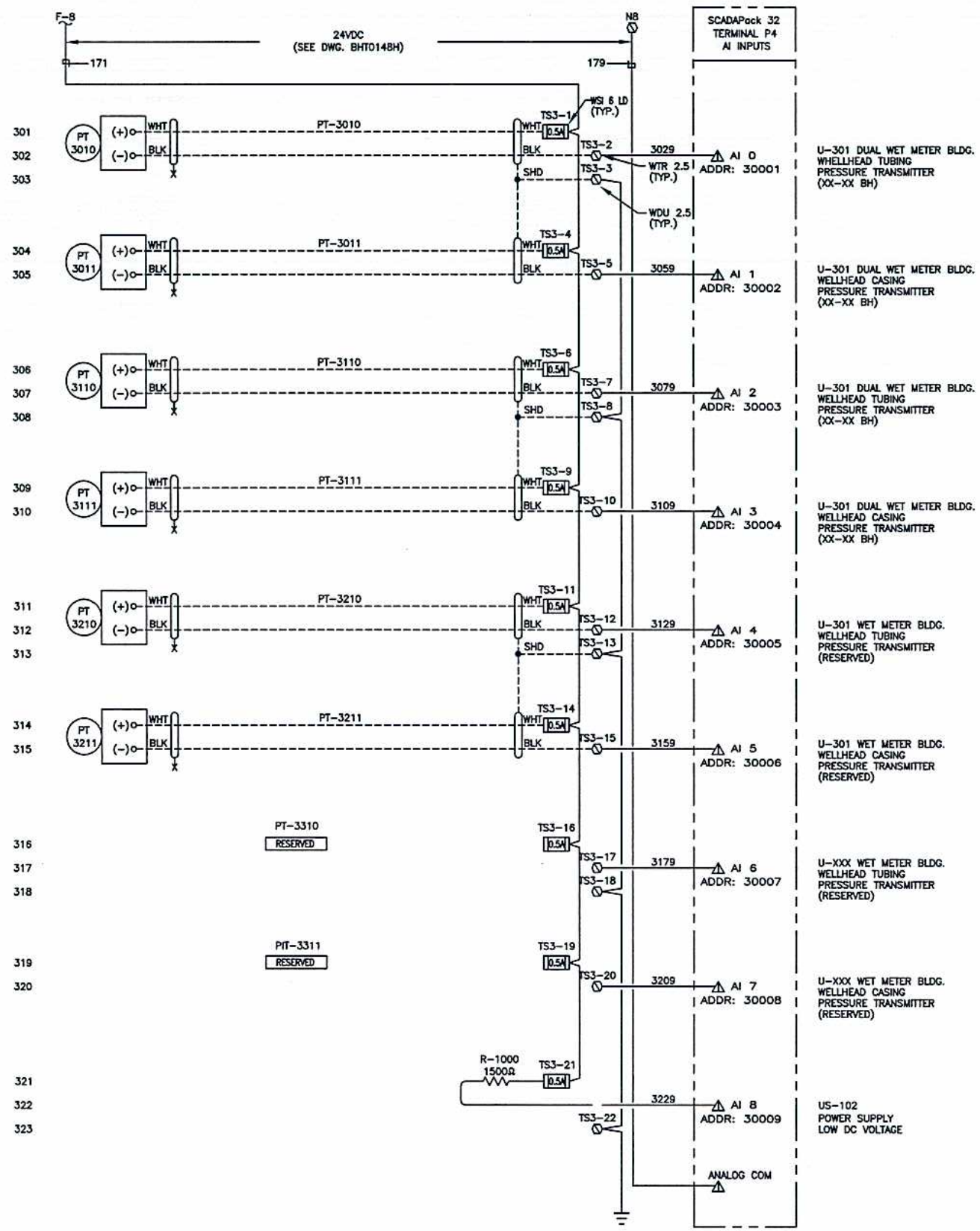

NOTE:

SINGLE CONDUCTORS: #14 AWG RW90 XLPE
PAIR CONDUCTORS: #16 AWG RW90 XLPE
– INDIVIDUALLY SHIELDED PAIRS
TRIAD CONDUCTORS: #16 AWG RW90 XLPE
– INDIVIDUALLY SHIELDED TRIADS

TERMINAL BLOCK LEGEND

- PLC PANEL DC TERMINAL
- PLC PANEL AC TERMINAL
- FIELD JUNCTION BOX TERMINAL
- MCC DC TERMINAL
- MCC AC TERMINAL
- CONTACTOR PANEL DC TERMINAL
- CONTACTOR PANEL AC TERMINAL
- PLC PANEL FUSED DC TERMINAL
- VFD TERMINAL

REFERENCE DRAWINGS	DWG. NO.
.	.
.	.
.	.
.	.

CAUTION : READ BEFORE EXCAVATION
ALL EXCAVATIONS MUST BE CARRIED OUT AS PER "ENCANA'S GROUND DISTURBANCE PRACTICE"

NO.	DATE (YYYY-MM-DD)	PROJECT DESCRIPTION	PROJ.	AFE	EPCM Co.	EPCM No.	APPD.
1	2011.11.18	RTU PANEL CONSTRUCTION	–	TBD	MAC ENG.	2011-0132	.
.	–	.	–	.	.	.	.
.	–	.	–	.	.	.	.
.	–	.	–	.	.	.	.
.	–	.	–	.	.	.	.
.	–	.	–	.	.	.	.
.	–	.	–	.	.	.	.
.	–	.	–	.	.	.	.

REV.NUMBER 1B-1 ISSUE STAGE	DATE (YYYY-MM-DD)	BY	CHKD.	APPD.
Prelim. (A)	–	–	–	–
Bid (B1)	2011.11.18	DS	–	–
Constr. (C)	–	–	–	–
As-Built (D)	–	–	–	–
–	–	–	–	–
–	–	–	–	–
–	–	–	–	–
–	–	–	–	–

PERMIT STAMP | ENGINEER'S STAMP

PERMIT STAMP AND PROFESSIONAL STAMP AFFIXED ABOVE SHALL APPLY ONLY TO REV(s) 1B-1

encana natural gas

MAIN FAC.	BIGHORN TYPICALS
MAIN LOC.	VARIES
FAC. TYPE	PAD SITE
SITE LOC.	VARIES
SCALE	N.T.S. (A1 Size)
EPCM No.	2011-0132
EPCM Co.	MAC ENGINEERING INC.
TITLE	RTU CONTROL PANEL – SCADAPACK 32 ANALOG INPUT I/O SCHEMATIC
AREA	BIGHORN BU
CLASS	N
FILE NO.	BHT0148K

PLOTTED: 18/11/2011 9:24:01 AM, BY: DAVID SIN
LAST SAVED: 17/11/2011 7:53:07 PM BY: DSIN
Layout: 1B-1, 2011/Nov/15 4:36:55 PM
Drawing: Q:\ECAD\ENCANA\12219-BYE-INP-DWGS\RRK-12219-E-INP-07C.DWG TAB NAME: MODEL
Xrefs: eng-perm2.dwg, eng-jxc.dwg

Date and Time Saved: 2010-11-17, 4:36 PM

Drawings Must Comply with Encana Drafting Standards (ECA-DDM-S-01)

FILE: Y:\PROJECTS\2011\2011-0132 - ENCANA 2012 METER SKID RFQ RTU PANEL DESIGN\DRAWINGS\ELECTRICAL\ISSUED FOR BID\BHT0148K.DWG

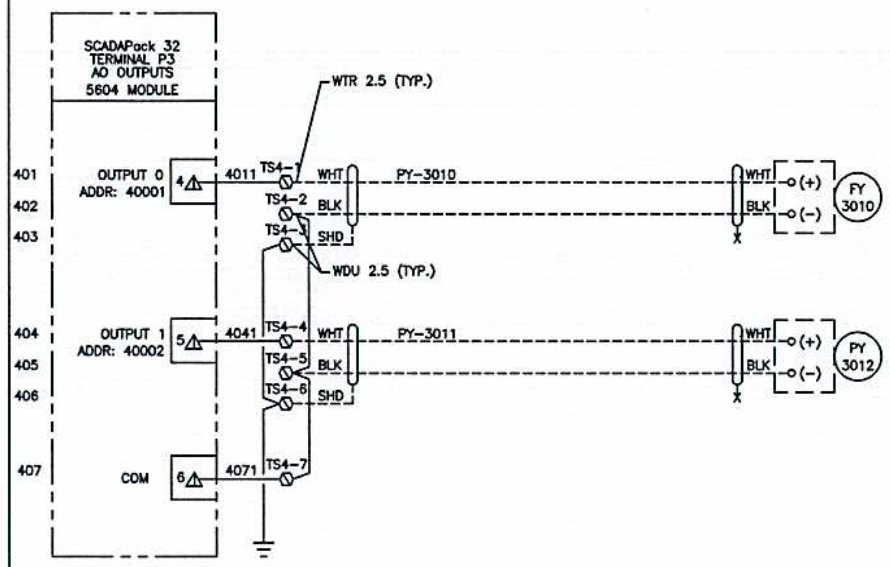

ANALOG OUTPUTS

U-301 WET METER BUILDING
FCV-3010 VALVE
WELLHEAD FLOW CONTROL
RUN #1

PY-3012 VALVE
LINE HEATER PRESSURE CONTROL
RUN #1
(RESERVED)

NOTE:
SINGLE CONDUCTORS: #14 AWG RW90 XLPE
PAIR CONDUCTORS: #16 AWG RW90 XLPE
– INDIVIDUALLY SHIELDED PAIRS
TRIAD CONDUCTORS: #16 AWG RW90 XLPE
– INDIVIDUALLY SHIELDED TRIADS

TERMINAL BLOCK LEGEND
- PLC PANEL DC TERMINAL
- PLC PANEL AC TERMINAL
- FIELD JUNCTION BOX TERMINAL
- MCC DC TERMINAL
- MCC AC TERMINAL
- CONTACTOR PANEL DC TERMINAL
- CONTACTOR PANEL AC TERMINAL
- PLC PANEL FUSED DC TERMINAL
- VFD TERMINAL

REFERENCE DRAWINGS	DWG. NO.
.	.
.	.
.	.
.	.

CAUTION : READ BEFORE EXCAVATION
ALL EXCAVATIONS MUST BE CARRIED OUT AS PER "ENCANA'S GROUND DISTURBANCE PRACTICE"

NO.	DATE (YYYY-MM-DD)	PROJECT DESCRIPTION	PROJ.	AFE	EPCM Co.	EPCM No.	APPD.
1	2011.11.18	RTU PANEL CONSTRUCTION	–	TBD	MAC ENG.	2011-0132	.
.	–	.	–	.	.	.	.
.	–	.	–	.	.	.	.
.	–	.	–	.	.	.	.
.	–	.	–	.	.	.	.
.	–	.	–	.	.	.	.
.	–	.	–	.	.	.	.
.	–	.	–	.	.	.	.

ISSUE STAGE	DATE (YYYY-MM-DD)	BY	CHKD.	APPD.
Prelim. (A)	–	–	–	–
Bid (B1)	2011.11.18	DS		
Constr. (C)	–	–	–	–
As-Built (D)	–	–	–	–
–	.	–	–	–
–	–	–	–	–
–	–	–	–	–
–	–	–	–	–

REV.NUMBER 1B-1

PERMIT STAMP | ENGINEER'S STAMP

PERMIT STAMP AND PROFESSIONAL STAMP AFFIXED ABOVE SHALL APPLY ONLY TO REV(s) 1B-1

encana. natural gas

MAIN FAC. BIGHORN TYPICALS
MAIN LOC. VARIES
FAC TYPE PAD SITE
SUB LOC. VARIES
SCALE N.T.S. (A1 Size) EPCM No. 2011-0132

EPCM Co. MAC ENGINEERING INC.

TITLE RTU CONTROL PANEL – SCADAPACK 32
ANALOG OUTPUT I/O SCHEMATIC

AREA BIGHORN BU | CLASS N | FILE NO. BHT0148L

PLOTTED: 18/11/2011 9:23:53 AM, BY: DAVID SIN
LAST SAVED: 17/11/2011 7:33:19 PM BY: DSIN
February 15, 2011 - 10:11 AM
Drawing: Y:\PROJECTS\2011\2012-E-TUP-DWGS\RRX-12218-E-TUP-07E.DWG TAB NAME: MODEL
Xrefs:

Date and Time Saved: 2010-11-17, 4:36 PM

Drawings Must Comply with Encana Drafting Standards (ECA-DDM-S-01)

FILE: Y:\PROJECTS\2011\2011-0132 - ENCANA 2012 METER SKID RFQ RTU PANEL DESIGN\DRAWINGS\ELECTRICAL\ISSUED FOR BID\BHT0148L.DWG

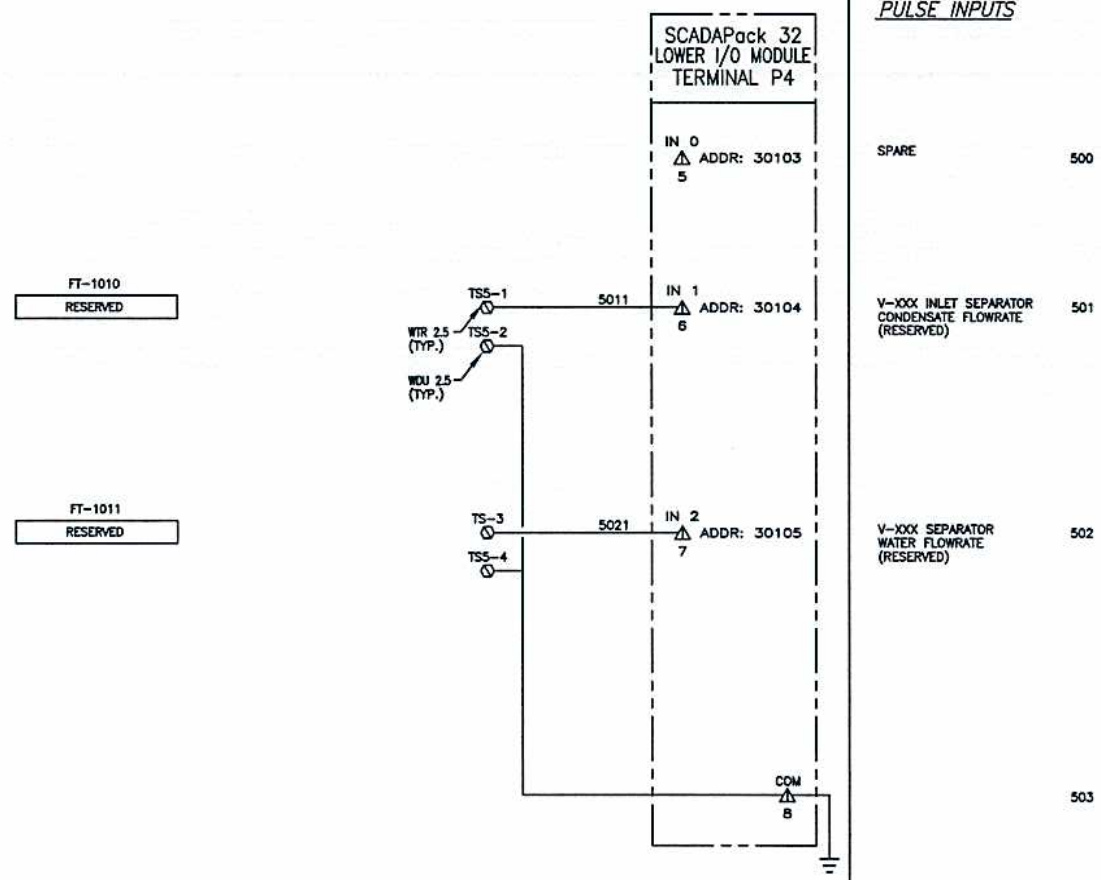

(FOR MC2+ / MC3+ FLOWMETER)

NOTE:
SINGLE CONDUCTORS: #14 AWG RW90 XLPE
PAIR CONDUCTORS: #16 AWG RW90 XLPE
– INDIVIDUALLY SHIELDED PAIRS
TRIAD CONDUCTORS: #16 AWG RW90 XLPE
– INDIVIDUALLY SHIELDED TRIADS

TERMINAL BLOCK LEGEND
- PLC PANEL DC TERMINAL
- PLC PANEL AC TERMINAL
- FIELD JUNCTION BOX TERMINAL
- MCC DC TERMINAL
- MCC AC TERMINAL
- CONTACTOR PANEL DC TERMINAL
- CONTACTOR PANEL AC TERMINAL
- PLC PANEL FUSED DC TERMINAL
- VFD TERMINAL

REFERENCE DRAWINGS	DWG. NO.
.	.
.	.
.	.
.	.

CAUTION : READ BEFORE EXCAVATION
ALL EXCAVATIONS MUST BE CARRIED OUT AS PER "ENCANA'S GROUND DISTURBANCE PRACTICE"

NO.	DATE (YYYY-MM-DD)	PROJECT DESCRIPTION	PROJ.	AFE	EPCM Co.	EPCM No.	APPD.
1	2011.11.18	RTU PANEL CONSTRUCTION	–	TBD	MAC ENG.	2011–0132	.
.	–	.	–	.	.	.	.
.	–	.	–	.	.	.	.
.	–	.	–	.	.	.	.
.	–	.	–	.	.	.	.
.	–	.	–	.	.	.	.
.	–	.	–	.	.	.	.
.	–	.	–	.	.	.	.

ISSUE STAGE	DATE (YYYY-MM-DD)	BY	CHKD.	APPD.
Prelim. (A)	–	–	–	–
Bid (B1)	2011.11.18	DS		
Constr. (C)	–	–	–	–
As-Built (D)	–	–	–	–
–	–	–	–	–
–	–	–	–	–
–	–	–	–	–
–	–	–	–	–

REV.NUMBER 1B–1

PERMIT STAMP | ENGINEER'S STAMP

PERMIT STAMP AND PROFESSIONAL STAMP AFFIXED ABOVE SHALL APPLY ONLY TO REV(s) 1B–1

encana natural gas

MAIN FAC. BIGHORN TYPICALS
MAIN LOC. VARIES
FAC. TYPE PAD SITE
SUB LOC. VARIES
SCALE N.T.S. (A1 Size) | EPCM No. 2011–0132

EPCM Co. MAC ENGINEERING INC.

TITLE RTU CONTROL PANEL – SCADAPACK 32
PULSE INPUT I/O SCHEMATIC

AREA BIGHORN BU | CLASS N | FILE NO. BHT0148M

Date and Time Saved: 2010–11–17, 4:36 PM

Drawings Must Comply with Encana Drafting Standards (ECA–DDM–S–01)

PLOTTED: 18/11/2011 9:23:44 AM, BY: DAVID SIN
LAST SAVED: 17/11/2011 7:53:46 PM BY: DSIN
February 15, 2011 4:38:31 PM
Drawing: Q:\CAD\ENCANA\1218-B\E-TWP-DWGS\BRK-12218-E-TWP-OTF.DWG TAB NAME: MODEL
Xrefs:

FILE: Y:\PROJECTS\2011\2011-0132 - ENCANA 2012 METER SKID RFQ RTU PANEL DESIGN\DRAWINGS\ELECTRICAL\ISSUED FOR BID\BHT0148M.DWG

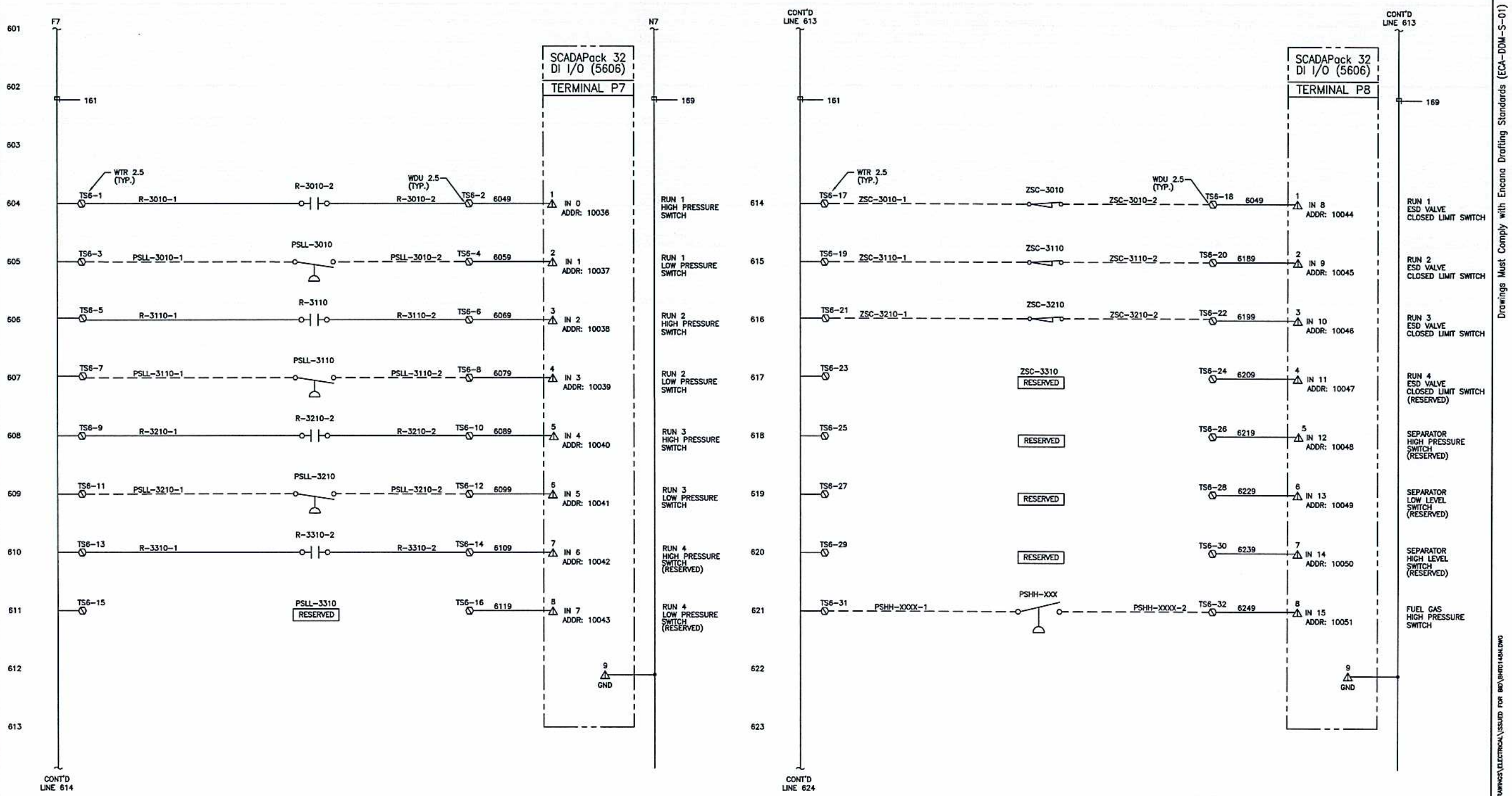

NOTE:
SINGLE CONDUCTORS: #14 AWG RW90 XLPE
PAIR CONDUCTORS: #16 AWG RW90 XLPE
– INDIVIDUALLY SHIELDED PAIRS
TRIAD CONDUCTORS: #16 AWG RW90 XLPE
– INDIVIDUALLY SHIELDED TRIADS

TERMINAL BLOCK LEGEND
- PLC PANEL DC TERMINAL
- PLC PANEL AC TERMINAL
- FIELD JUNCTION BOX TERMINAL
- MCC DC TERMINAL
- MCC AC TERMINAL
- CONTACTOR PANEL DC TERMINAL
- CONTACTOR PANEL AC TERMINAL
- PLC PANEL FUSED DC TERMINAL
- VFD TERMINAL

REFERENCE DRAWINGS	DWG. NO.
.	.
.	.
.	.
.	.

CAUTION : READ BEFORE EXCAVATION
ALL EXCAVATIONS MUST BE CARRIED OUT AS PER "ENCANA'S GROUND DISTURBANCE PRACTICE"

NO.	DATE (YYYY-MM-DD)	PROJECT DESCRIPTION	PROJ.	AFE	EPCM Co.	EPCM No.	APPD.
1	2011.11.18	RTU PANEL CONSTRUCTION	–	TBD	MAC ENG.	2011–0132	.
.	–	.	–	.	.	.	.
.	–	.	–	.	.	.	.
.	–	.	–	.	.	.	.
.	–	.	–	.	.	.	.
.	–	.	–	.	.	.	.
.	–	.	–	.	.	.	.
.	–	.	–	.	.	.	.
.	–	.	–	.	.	.	.

REV.NUMBER 1B–1 ISSUE STAGE	DATE (YYYY-MM-DD)	BY	CHKD.	APPD.
Prelim. (A)	–	–	–	–
Bid (B1)	2011.11.18	DS		
Constr. (C)	–	–	–	–
As–Built (D)	–	–	–	–
–	.	–	–	–
–	–	–	–	–
–	–	–	–	–
–	–	–	–	–

PERMIT STAMP ENGINEER'S STAMP

PERMIT STAMP AND PROFESSIONAL STAMP AFFIXED ABOVE SHALL APPLY ONLY TO REV(s) 1B–1

encana natural gas

MAIN FAC. BIGHORN TYPICALS
MAIN LOC. VARIES
FAC. TYPE PAD SITE
SITE LOC. VARIES
SCALE N.T.S. (A1 Size) EPCM No. 2011–0132

EPCM Co. MAC ENGINEERING INC.

TITLE RTU CONTROL PANEL – SCADAPACK 32 5606 DISCRETE INPUT I/O SCHEMATIC

AREA BIGHORN BU | CLASS N | FILE NO. BHT0148N

Date and Time Saved: 2010-11-17, 4:36 PM

Drawings Must Comply with Encana Drafting Standards (ECA-DDM-S-01)

PLOTTED: 18/11/2011 9:23:34 AM, BY: DAVID SIN
LAST SAVED: 2011/11/18 7:55:26 PM BY: DSIN
Layout: 1B–1 Date: 2011-11-18
Drawing: Q:\CAD\ENCANA\12218-B\E-TMP-DWGS\BRK-12218-E-TMP-07A.DWG TAB NAME: MODEL
Xrefs: eng-perm2.dwg, eng-jxc.dwg

FILE: Y:\PROJECTS\2011\2011-0132 – ENCANA 2012 METER SKID RFQ RTU PANEL DESIGN\DRAWINGS\ELECTRICAL\ISSUED FOR BID\BHT0148N.DWG

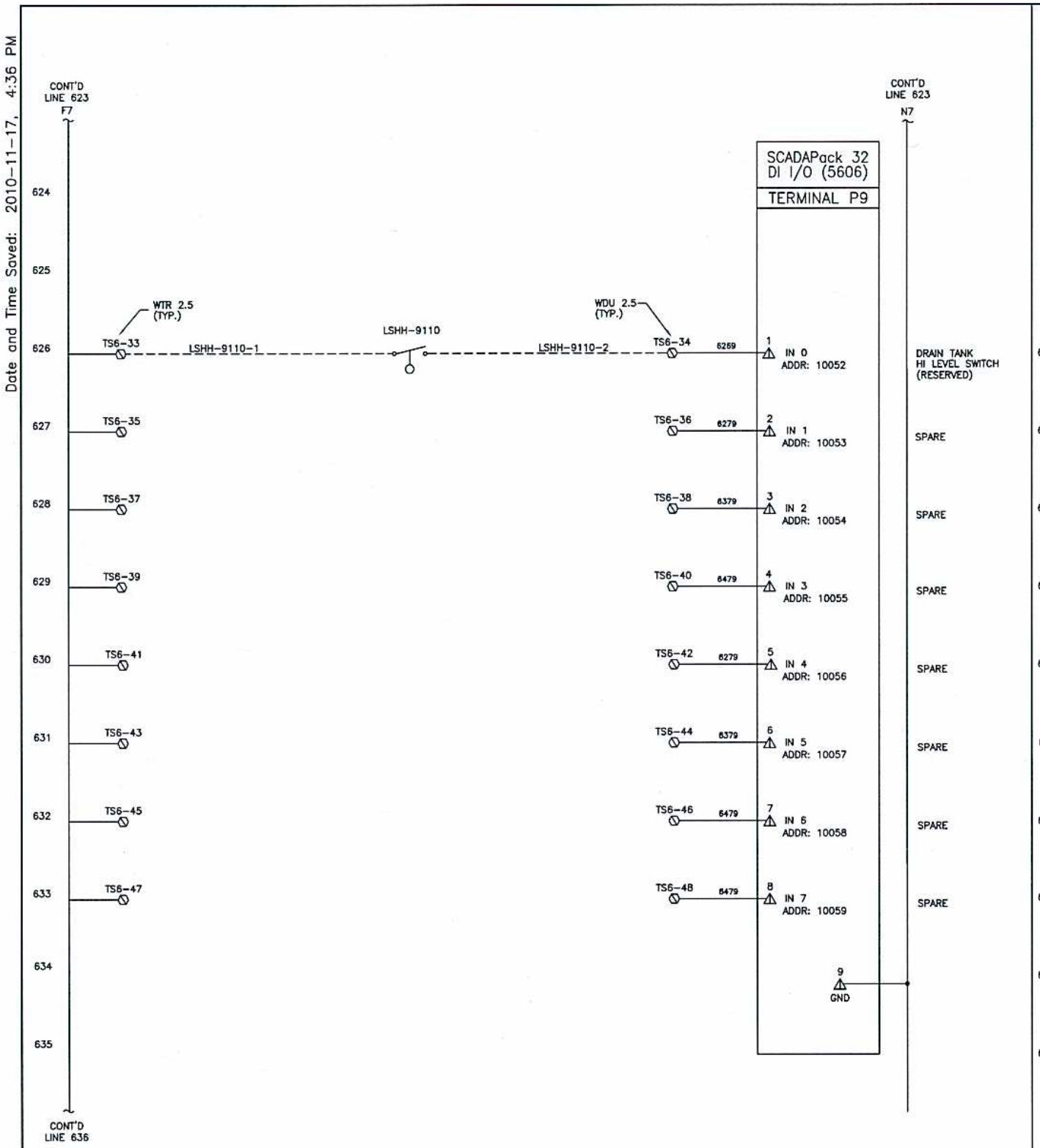

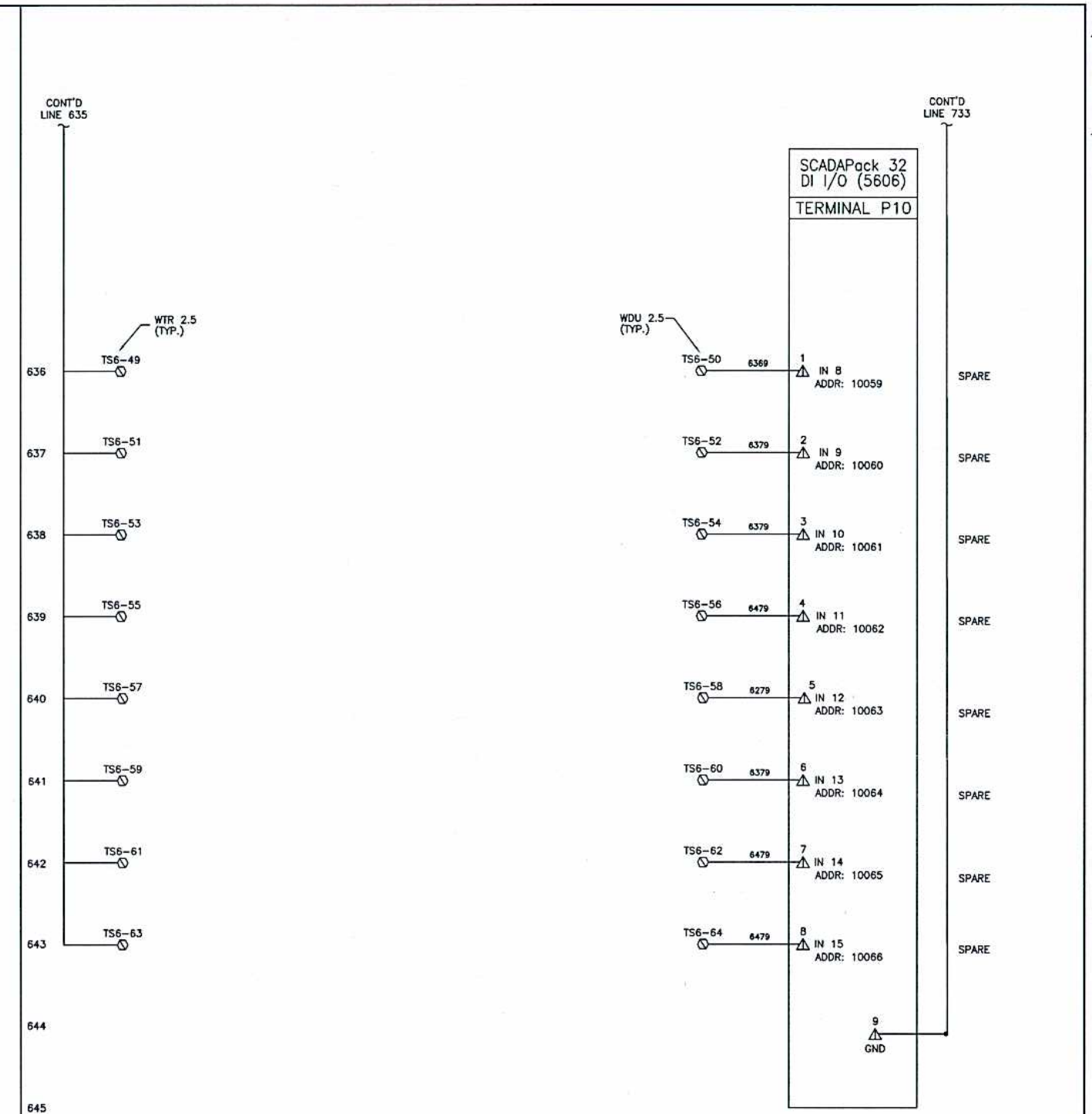

NOTE:
SINGLE CONDUCTORS: #14 AWG RW90 XLPE
PAIR CONDUCTORS: #16 AWG RW90 XLPE
– INDIVIDUALLY SHIELDED PAIRS
TRIAD CONDUCTORS: #16 AWG RW90 XLPE
– INDIVIDUALLY SHIELDED TRIADS

TERMINAL BLOCK LEGEND
- PLC PANEL DC TERMINAL
- PLC PANEL AC TERMINAL
- FIELD JUNCTION BOX TERMINAL
- MCC DC TERMINAL
- MCC AC TERMINAL
- CONTACTOR PANEL DC TERMINAL
- CONTACTOR PANEL AC TERMINAL
- PLC PANEL FUSED DC TERMINAL
- VFD TERMINAL

REFERENCE DRAWINGS	DWG. NO.
.	.
.	.
.	.
.	.

CAUTION : READ BEFORE EXCAVATION
ALL EXCAVATIONS MUST BE CARRIED OUT AS PER "ENCANA'S GROUND DISTURBANCE PRACTICE"

NO.	DATE (YYYY-MM-DD)	PROJECT DESCRIPTION	PROJ.	AFE	EPCM Co.	EPCM No.	APPD.
1	2011.11.18	RTU PANEL CONSTRUCTION	–	TBD	MAC	2011-0132	.
.	–	.	–	.	.	.	.
.	–	.	–	.	.	.	.
.	–	.	–	.	.	.	.
.	–	.	–	.	.	.	.
.	–	.	–	.	.	.	.
.	–	.	–	.	.	.	.
.	–	.	–	.	.	.	.
.	–	.	–	.	.	.	.

REV.NUMBER 1B-1 ISSUE STAGE	DATE (YYYY-MM-DD)	BY	CHKD.	APPD.
Prelim. (A)	–	–	–	–
Bid (B1)	2011.11.18	DS		
Constr. (C)	–	–	–	–
As-Built (D)	–	–	–	–
–	.	–	–	–
–	–	–	–	–
–	–	–	–	–
–	–	–	–	–

PERMIT STAMP ENGINEER'S STAMP

PERMIT STAMP AND PROFESSIONAL STAMP AFFIXED ABOVE SHALL APPLY ONLY TO REV(s) 1B-1

encana. natural gas

MAIN FAC.	GAS PLANT 01-35
MAINL LSD.	VARIES
FAC. TAPE	PAD SITE
SITE LSD.	VARIES
SCALE	N.T.S. (A1 Size)
EPCM No.	2011-0132
EPCM Co.	MAC ENGINEERING INC.
TITLE	RTU CONTROL PANEL – SCADAPACK 32 DISCRETE INPUT I/O SCHEMATIC
AREA	BIGHORN BU
CLASS	N
FILE NO.	BHT0148P

FILE: Y:\PROJECTS\2011\2011-0132 - ENCANA 2012 METER SKID RFQ RTU PANEL DESIGN\DRAWINGS\ELECTRICAL\ISSUED FOR BID\BHT0148P.DWG

Drawings Must Comply with Encana Drafting Standards (ECA-DDM-S-01)

Date and Time Saved: 2010-11-17, 4:36 PM

PLOTTED: 18/11/2011 12:36:10 PM, BY: GOLMAOV, KLIMOV
LAST SAVED: 18/11/2011 12:33:54 PM, BY: GOLMAOV
February 15, 2011 4:46:00 p.m.
Drawing: O:\ECAD\ENCANA\12218-B\E-TMP-DWGS\RRK-12218-E-TMP-07BLDWG TAB NAME: MODEL
Xrefs: eng-permz.dwg, eng-pic.dwg
T-0033.DWG (ECAD-A1 Size Title Block) v7

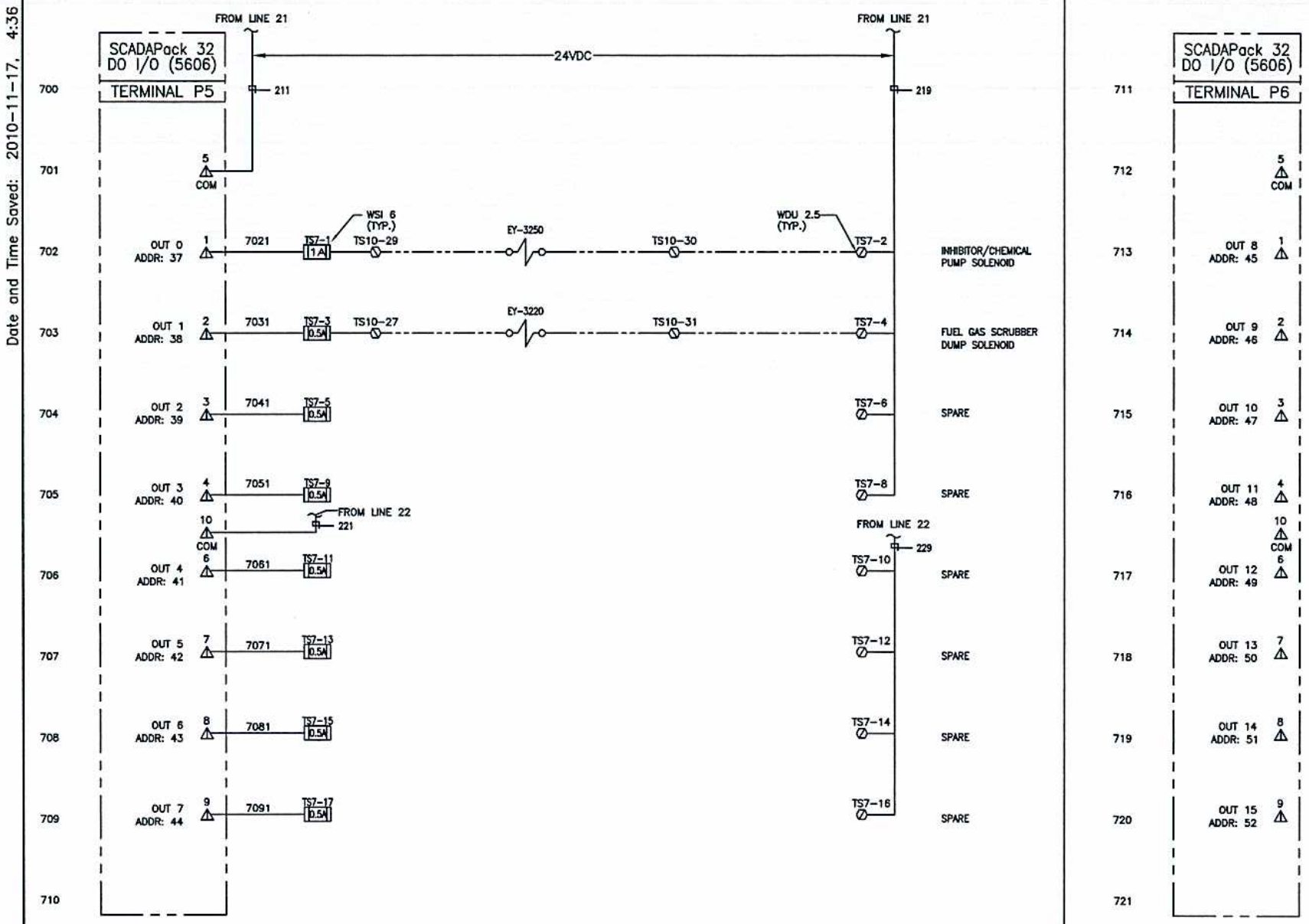

NOTE:
SINGLE CONDUCTORS: #14 AWG RW90 XLPE
PAIR CONDUCTORS: #16 AWG RW90 XLPE
– INDIVIDUALLY SHIELDED PAIRS
TRIAD CONDUCTORS: #15 AWG RW90 XLPE
– INDIVIDUALLY SHIELDED TRIADS

TERMINAL BLOCK LEGEND
- PLC PANEL DC TERMINAL
- PLC PANEL AC TERMINAL
- FIELD JUNCTION BOX TERMINAL
- MCC DC TERMINAL
- MCC AC TERMINAL
- CONTACTOR PANEL DC TERMINAL
- CONTACTOR PANEL AC TERMINAL
- PLC PANEL FUSED DC TERMINAL
- VFD TERMINAL

REFERENCE DRAWINGS	DWG. NO.
.	.
.	.
.	.
.	.

CAUTION : READ BEFORE EXCAVATION
ALL EXCAVATIONS MUST BE CARRIED OUT AS PER "ENCANA'S GROUND DISTURBANCE PRACTICE"

NO.	DATE (YYYY-MM-DD)	PROJECT DESCRIPTION	PROJ.	AFE	EPCM Co.	EPCM No.	APPD.
1	2011.11.18	RTU PANEL CONSTRUCTION	–	TBD	MAC	2011–0132	.
.	–	.	–	.	.	.	.
.	–	.	–	.	.	.	.
.	–	.	–	.	.	.	.
.	–	.	–	.	.	.	.
.	–	.	–	.	.	.	.
.	–	.	–	.	.	.	.
.	–	.	–	.	.	.	.
.	–	.	–	.	.	.	.

REV. NUMBER 1B–1	ISSUE STAGE	DATE (YYYY-MM-DD)	BY	CHKD.	APPD.
	Prelim. (A)	–	–	–	–
	Bid (B1)	2011.11.18	DS		
	Constr. (C)	–	–	–	–
	As–Built (D)	–	–	–	–
	–	–	–	–	–
	–	–	–	–	–
	–	–	–	–	–
	–	–	–	–	–

PERMIT STAMP AND PROFESSIONAL STAMP AFFIXED ABOVE SHALL APPLY ONLY TO REV(s) 1B–1

PERMIT STAMP ENGINEER'S STAMP

encana natural gas

MAIN FAC.	BIGHORN TYPICALS
MAIN LOC.	VARIES
FAC. TYPE	PAD SITE
SITE LOC.	VARIES
SCALE	N.T.S. (A1 Size)
EPCM No.	2011–0132
EPCM Co.	MAC ENGINEERING INC.
TITLE	RTU CONTROL PANEL – SCADAPACK 32 DISCRETE I/O SCHEMATIC
AREA	BIGHORN BU
CLASS	N
FILE NO.	BHT0148Q

PLOTTED: 18/11/2011 9:23:13 AM, BY: DAVID SIN
LAST SAVED: 18/11/2011 9:23:05 AM BY: DSIN
Folder: Y:\PROJECTS\2011\2011-0132 - ENCANA 2012 METER SKID RFQ RTU PANEL DESIGN\DRAWINGS\ELECTRICAL\ISSUED FOR BID\BHT01480.DWG
Drawing: Q:\CAD\ENCANA\12218-B\E-TMP-DWGS\BRK-12218-E-TMP-07B.DWG TAB NAME: MODEL
Xrefs: eng-perm2.dwg, eng-jxc.dwg
T-4033.DWG (BROWN, A1 Bar Title Block) v7

Date and Time Saved: 2010-11-17, 4:36 PM

Drawings Must Comply with Encana Drafting Standards (ECA-DDM-S-01)

FILE: Y:\PROJECTS\2011\2011-0132 - ENCANA 2012 METER SKID RFQ RTU PANEL DESIGN\DRAWINGS\ELECTRICAL\ISSUED FOR BID\BHT01480.DWG

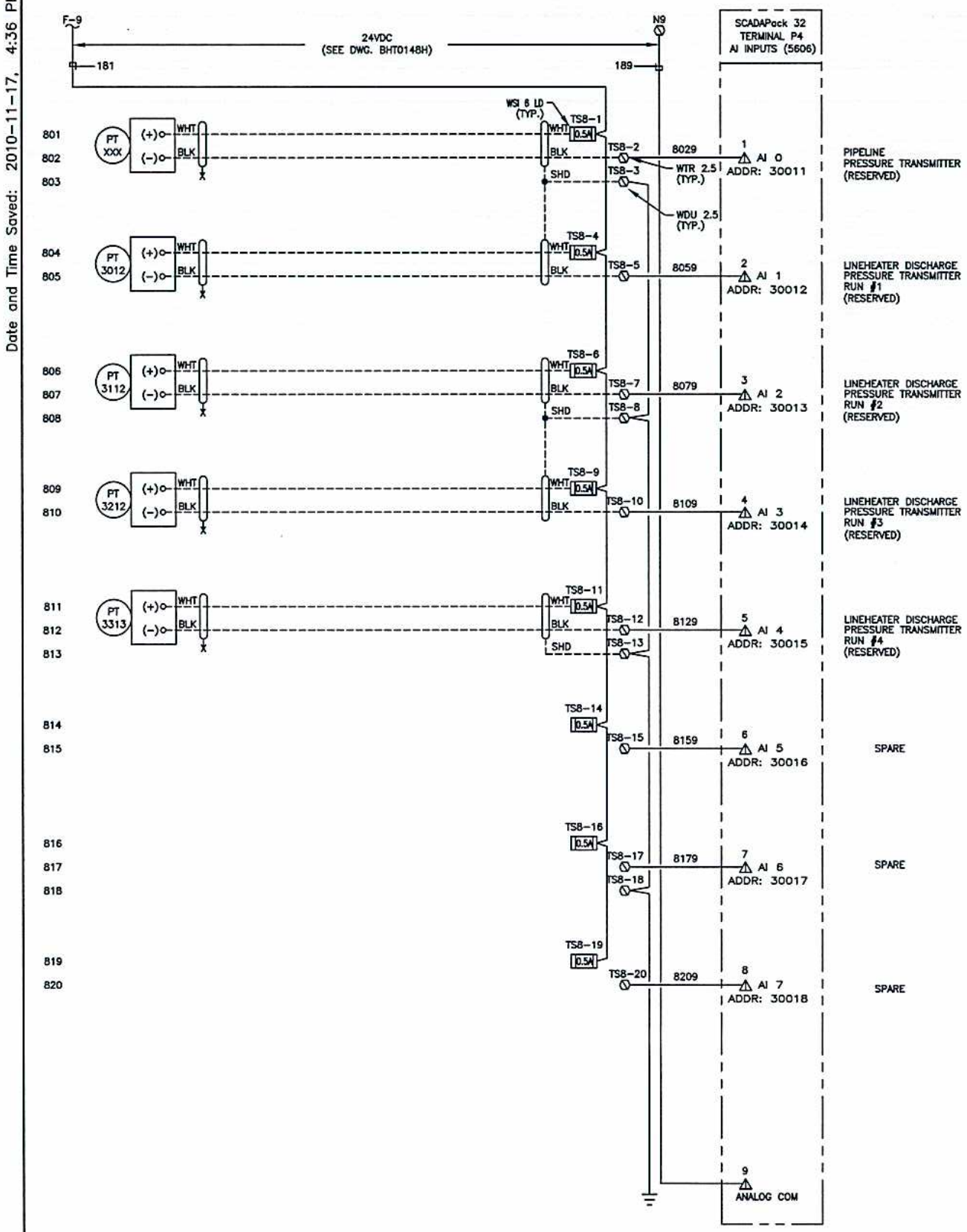

NOTE:

SINGLE CONDUCTORS: #14 AWG RW90 XLPE

PAIR CONDUCTORS: #16 AWG RW90 XLPE
– INDIVIDUALLY SHIELDED PAIRS

TRIAD CONDUCTORS: #16 AWG RW90 XLPE
– INDIVIDUALLY SHIELDED TRIADS

TERMINAL BLOCK LEGEND

- □ PLC PANEL DC TERMINAL
- ■ PLC PANEL AC TERMINAL
- ◪ FIELD JUNCTION BOX TERMINAL
- ○ MCC DC TERMINAL
- ● MCC AC TERMINAL
- △ CONTACTOR PANEL DC TERMINAL
- ▲ CONTACTOR PANEL AC TERMINAL
- ▭ PLC PANEL FUSED DC TERMINAL
- ⊠ VFD TERMINAL

REFERENCE DRAWINGS	DWG. NO.
.	.
.	.
.	.
.	.

CAUTION : READ BEFORE EXCAVATION

ALL EXCAVATIONS MUST BE CARRIED OUT AS PER "ENCANA'S GROUND DISTURBANCE PRACTICE"

NO.	DATE (YYYY-MM-DD)	PROJECT DESCRIPTION	PROJ.	AFE	EPCM Co.	EPCM No.	APPD.
1	2011.11.18	RTU PANEL CONSTRUCTION	–	TBD	MAC ENG.	2011-0132	.
.	–	.	–	.	.	.	.
.	–	.	–	.	.	.	.
.	–	.	–	.	.	.	.
.	–	.	–	.	.	.	.
.	–	.	–	.	.	.	.
.	–	.	–	.	.	.	.
.	–	.	–	.	.	.	.
.	–	.	–	.	.	.	.

REV.NUMBER 1B-1	ISSUE STAGE	DATE (YYYY-MM-DD)	BY	CHKD.	APPD.
	Prelim. (A)	–	–	–	–
	Bid (B1)	2011.11.18	DS	–	–
	Constr. (C)	–	–	–	–
	As-Built (D)	–	–	–	–
	–	.	–	–	–
	–	–	–	–	–
	–	–	–	–	–
	–	–	–	–	–

PERMIT STAMP ENGINEER'S STAMP

PERMIT STAMP AND PROFESSIONAL STAMP AFFIXED ABOVE SHALL APPLY ONLY TO REV(s) 1B-1

encana. natural gas

MAIN FAC.	BIGHORN TYPICALS
MAIN LOC.	VARIES
FAC TYPE	PAD SITE
SITE CAL.	VARIES
SCALE	N.T.S. (A1 Size)
EPCM No.	2011-0132
EPCM Co.	MAC ENGINEERING INC.
TITLE	RTU CONTROL PANEL – SCADAPACK 32 5606 ANALOG INPUT I/O SCHEMATIC
AREA	BIGHORN BU
CLASS	N
FILE NO.	BHT0148R

Date and Time Saved: 2010-11-17, 4:36 PM

Drawings Must Comply with Encana Drafting Standards (ECA-DDM-S-01)

PLOTTED: 18/11/2011 9:22:59 AM, BY: DAVID SIN
LAST SAVED: 18/11/2011 9:22:49 AM BY: DSIN
Filename: Y:\PROJECTS\2011\2011-0132 - ENCANA 2012 METER SKID RFQ RTU PANEL DESIGN\DRAWINGS\ELECTRICAL\ISSUED FOR BID\BHT0148R.DWG
Drawing: C:\LCAD\ENCANA\12216-BYE-TMP-DWGS\RRK-12216-E-TMP-07C.DWG TAB NAME: MODEL
Xrefs: eng-perm2.dwg, eng-jec.dwg
T-HEDBLOWE (BORDER A2 Rev Title Block v2)

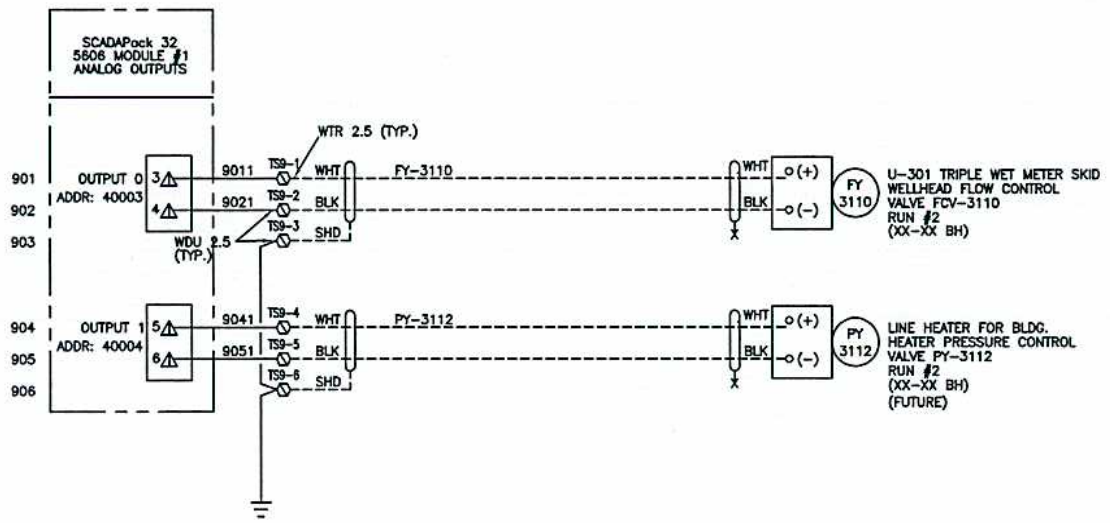

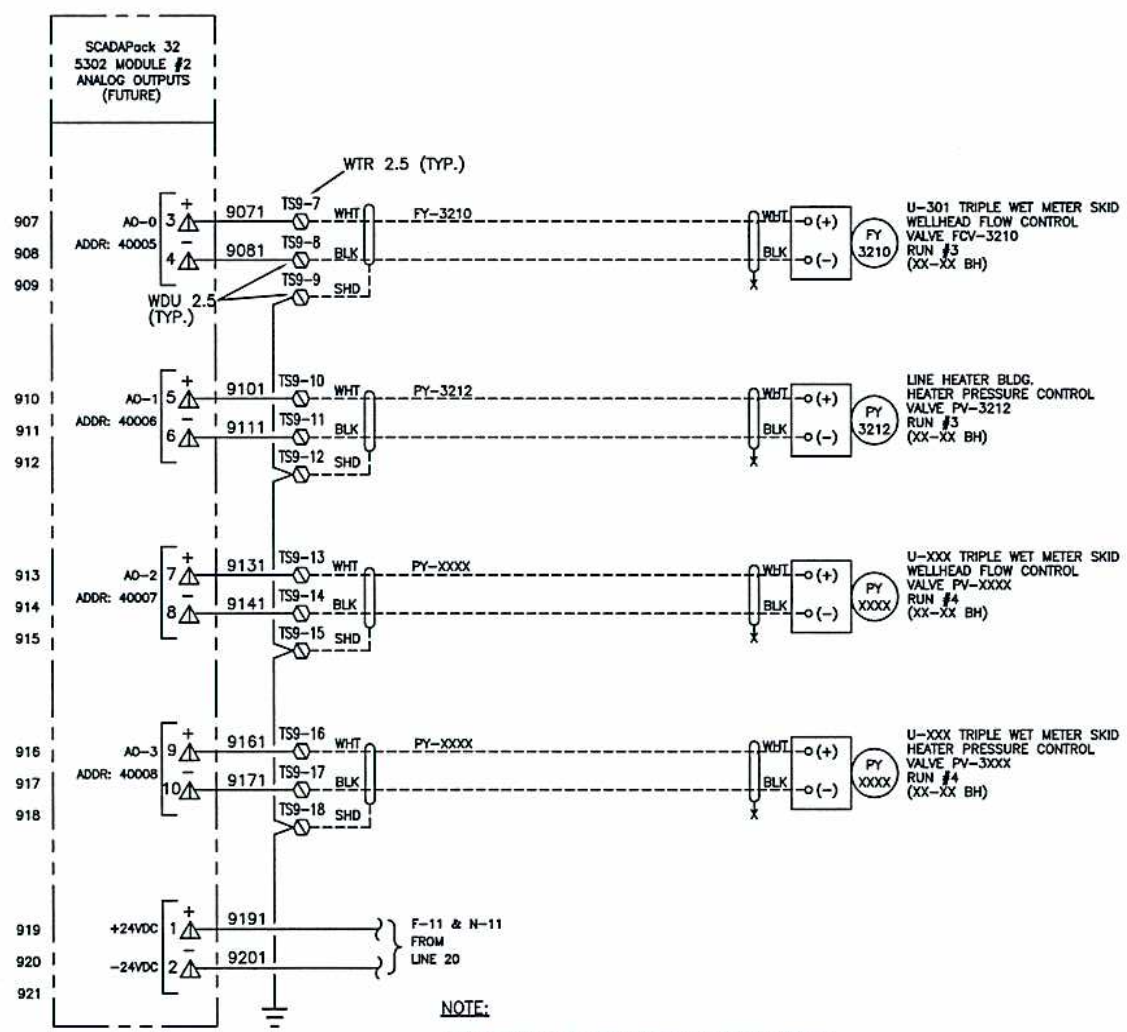

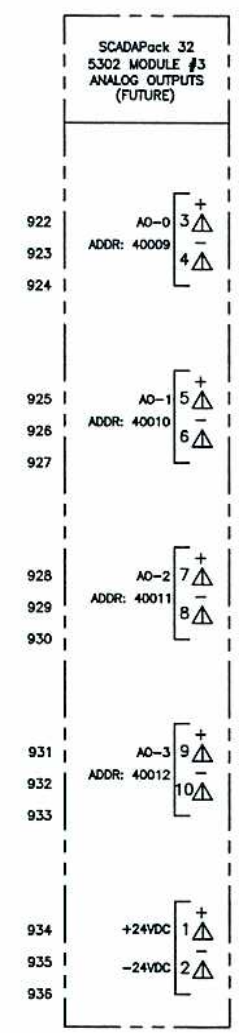

NOTE:

5302 MODULE TO BE ADDED IN THE FUTURE IF REQUIRED.
TERMINALS TS9-7 TO TS9-18 TO BE ADDED AS PART OF RTU PANEL CONSTRUCTION

NOTE:

SINGLE CONDUCTORS: #14 AWG RW90 XLPE
PAIR CONDUCTORS: #16 AWG RW90 XLPE
– INDIVIDUALLY SHIELDED PAIRS
TRIAD CONDUCTORS: #16 AWG RW90 XLPE
– INDIVIDUALLY SHIELDED TRIADS

TERMINAL BLOCK LEGEND

- PLC PANEL DC TERMINAL
- PLC PANEL AC TERMINAL
- FIELD JUNCTION BOX TERMINAL
- MCC DC TERMINAL
- MCC AC TERMINAL
- CONTACTOR PANEL DC TERMINAL
- CONTACTOR PANEL AC TERMINAL
- PLC PANEL FUSED DC TERMINAL
- VFD TERMINAL

REFERENCE DRAWINGS	DWG. NO.
.	.
.	.
.	.
.	.

CAUTION : READ BEFORE EXCAVATION
ALL EXCAVATIONS MUST BE CARRIED OUT AS PER "ENCANA'S GROUND DISTURBANCE PRACTICE"

NO.	DATE (YYYY-MM-DD)	PROJECT DESCRIPTION	PROJ.	AFE	EPCM Co.	EPCM No.	APPD.
1	2011.11.18	RTU PANEL CONSTRUCTION	–	TBD	MAC	2011–0132	
.	–	.	–	.	.	.	.
.	–	.	–	.	.	.	.
.	–	.	–	.	.	.	.
.	–	.	–	.	.	.	.
.	–	.	–	.	.	.	.
.	–	.	–	.	.	.	.
.	–	.	–	.	.	.	.
.	–	.	–	.	.	.	.

REV.NUMBER 1B–1

ISSUE STAGE	DATE (YYYY-MM-DD)	BY	CHKD.	APPD.
Prelim. (A)	–	–	–	–
Bid (B1)	2011.11.18	DS		
Constr. (C)	–	–	–	–
As-Built (D)	–	–	–	–
–	–	–	–	–
–	–	–	–	–
–	–	–	–	–
–	–	–	–	–

PERMIT STAMP | ENGINEER'S STAMP

PERMIT STAMP AND PROFESSIONAL STAMP AFFIXED ABOVE SHALL APPLY ONLY TO REV(s) 1B–1

encana. natural gas

MAIN FAC.	BIGHORN TYPICALS
MAIN LOC.	VARIES
FAC TYPE	PAD SITE
SUB LOC.	VARIES
SCALE	N.T.S. (A1 Size)
EPCM No.	2011–0132

EPCM Co. MAC ENGINEERING INC.

TITLE RTU CONTROL PANEL – SCADAPACK 32 ANALOG OUTPUT I/O SCHEMATIC

AREA BIGHORN BU | CLASS N | FILE NO. BHT0148S

PLOTTED: 18/11/2011 9:22:43 AM, BY: DAVID SIN
LAST SAVED: 18/11/2011 9:22:34 AM BY: DSIN
Autocad Ver. 18.1s (LMS Tech), Plot Scale: 1:1
Drawing: Q:\CAD\ENCANA\12218-B1\E-TWP-DWGS\RRX-12218-E-TWP-070.DWG TAB NAME: MODEL
Xrefs: eng-perm2.dwg, eng-jxc.dwg

Date and Time Saved: 2010-11-17, 4:36 PM

Drawings Must Comply with Encana Drafting Standards (ECA-DDM-S-01)

FILE: Y:\PROJECTS\2011\2011-0132 - ENCANA 2012 METER SKID RFQ RTU PANEL DESIGN\DRAWINGS\ELECTRICAL\ISSUED FOR BID\BHT0148S.DWG

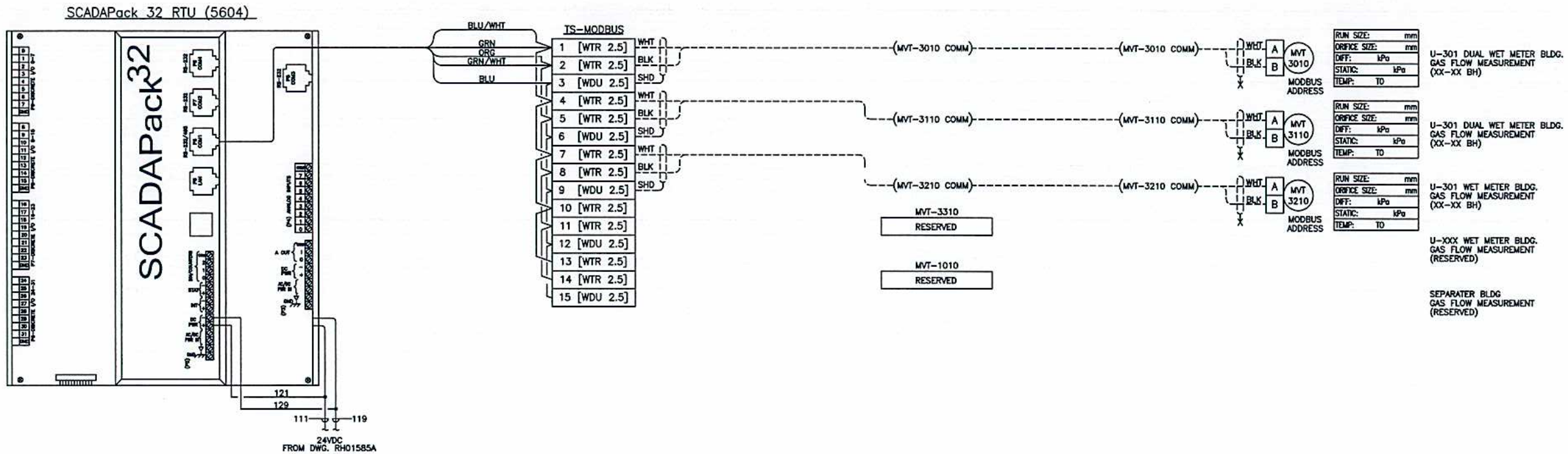

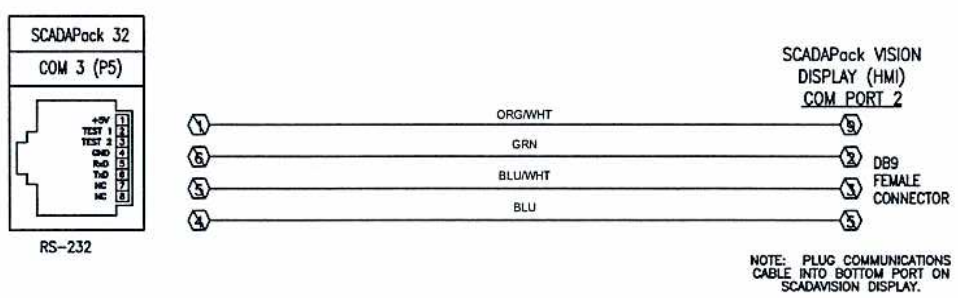

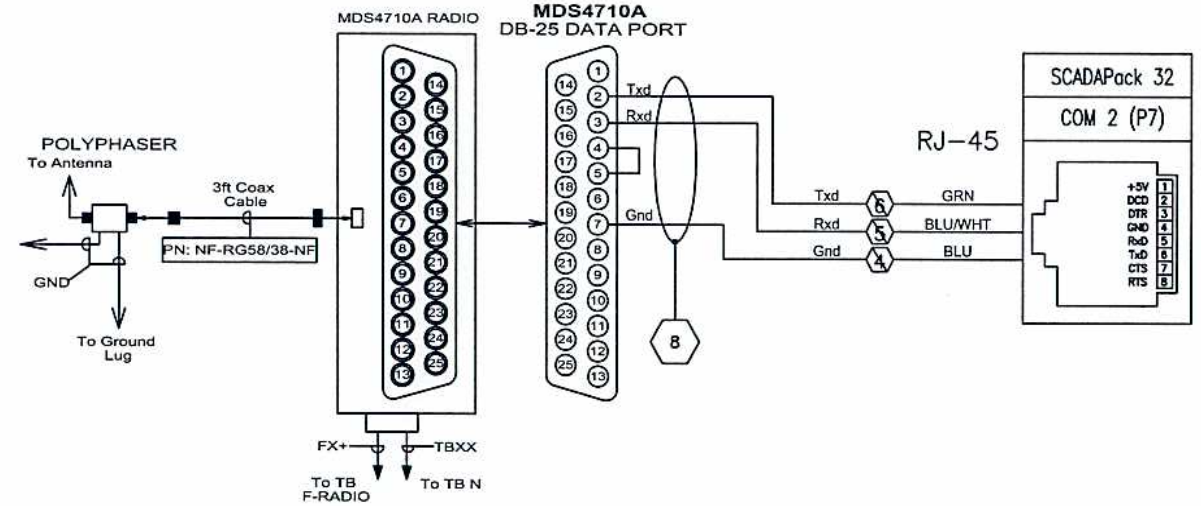

NOTE:
SINGLE CONDUCTORS: #14 AWG RW90 XLPE
PAIR CONDUCTORS: #16 AWG RW90 XLPE
– INDIVIDUALLY SHIELDED PAIRS
TRIAD CONDUCTORS: #16 AWG RW90 XLPE
– INDIVIDUALLY SHIELDED TRIADS

TERMINAL BLOCK LEGEND
- PLC PANEL DC TERMINAL
- PLC PANEL AC TERMINAL
- FIELD JUNCTION BOX TERMINAL
- MCC DC TERMINAL
- MCC AC TERMINAL
- CONTACTOR PANEL DC TERMINAL
- CONTACTOR PANEL AC TERMINAL
- PLC PANEL FUSED DC TERMINAL
- VFD TERMINAL

REFERENCE DRAWINGS	DWG. NO.
.	.
.	.
.	.
.	.

CAUTION : READ BEFORE EXCAVATION
ALL EXCAVATIONS MUST BE CARRIED OUT AS PER "ENCANA'S GROUND DISTURBANCE PRACTICE"

NO.	DATE (YYYY-MM-DD)	PROJECT DESCRIPTION	PROJ.	AFE	EPCM Co.	EPCM No.	APPD.
1	2011.11.18	RTU PANEL CONSTRUCTION	–	TBD	MAC ENG.	2011-0132	.
.	–	.	–	.	.	.	.
.	–	.	–	.	.	.	.
.	–	.	–	.	.	.	.
.	–	.	–	.	.	.	.
.	–	.	–	.	.	.	.
.	–	.	–	.	.	.	.
.	–	.	–	.	.	.	.

REV.NUMBER 1B-1

ISSUE STAGE	DATE (YYYY-MM-DD)	BY	CHKD.	APPD.
Prelim. (A)	–	–	–	–
Bid (B1)	2011.11.18	DS		
Constr. (C)	–	–	–	–
As-Built (D)	–	–	–	–
–	–	–	–	–
–	–	–	–	–
–	–	–	–	–
–	–	–	–	–

PERMIT STAMP ENGINEER'S STAMP

PERMIT STAMP AND PROFESSIONAL STAMP AFFIXED ABOVE SHALL APPLY ONLY TO REV(s) 1B-1

encana natural gas

MAIN FAC.	BIGHORN TYPICALS
MAIN LOC.	VARIES
FAC. TYPE	PAD SITE
SITE LOC.	VARIES
SCALE	N.T.S. (A1 Size)
EPCM No.	2011-0132

EPCM Co. MAC ENGINEERING INC.

TITLE RTU CONTROL PANEL – SCADAPACK 32 COMMUNICATIONS I/O SCHEMATIC

AREA BIGHORN BU | CLASS N | FILE NO. BHT0148T

Date and Time Saved: 2010-11-17, 4:36 PM

Drawings Must Comply with Encana Drafting Standards (ECA-DDM-S-01)

PLOTTED: 18/11/2011 9:22:27 AM, BY: DAVID SIN
LAST SAVED: 18/11/2011 9:22:09 AM BY: DSIN
February 15, 2011 6:39:14 PM
Drawing: Q:\ECA0\ENCANA\12218-BYE-TWP-DWGS\RBK-12218-E-TWP-08A.DWG TAB NAME: MODEL
Xrefs: eng-perm2.dwg, eng-jic.dwg

FILE: Y:\PROJECTS\2011\2011-0132 - ENCANA 2012 METER SKID RFQ RTU PANEL DESIGN\DRAWINGS\ELECTRICAL\ISSUED FOR BID\BHT0148T.DWG

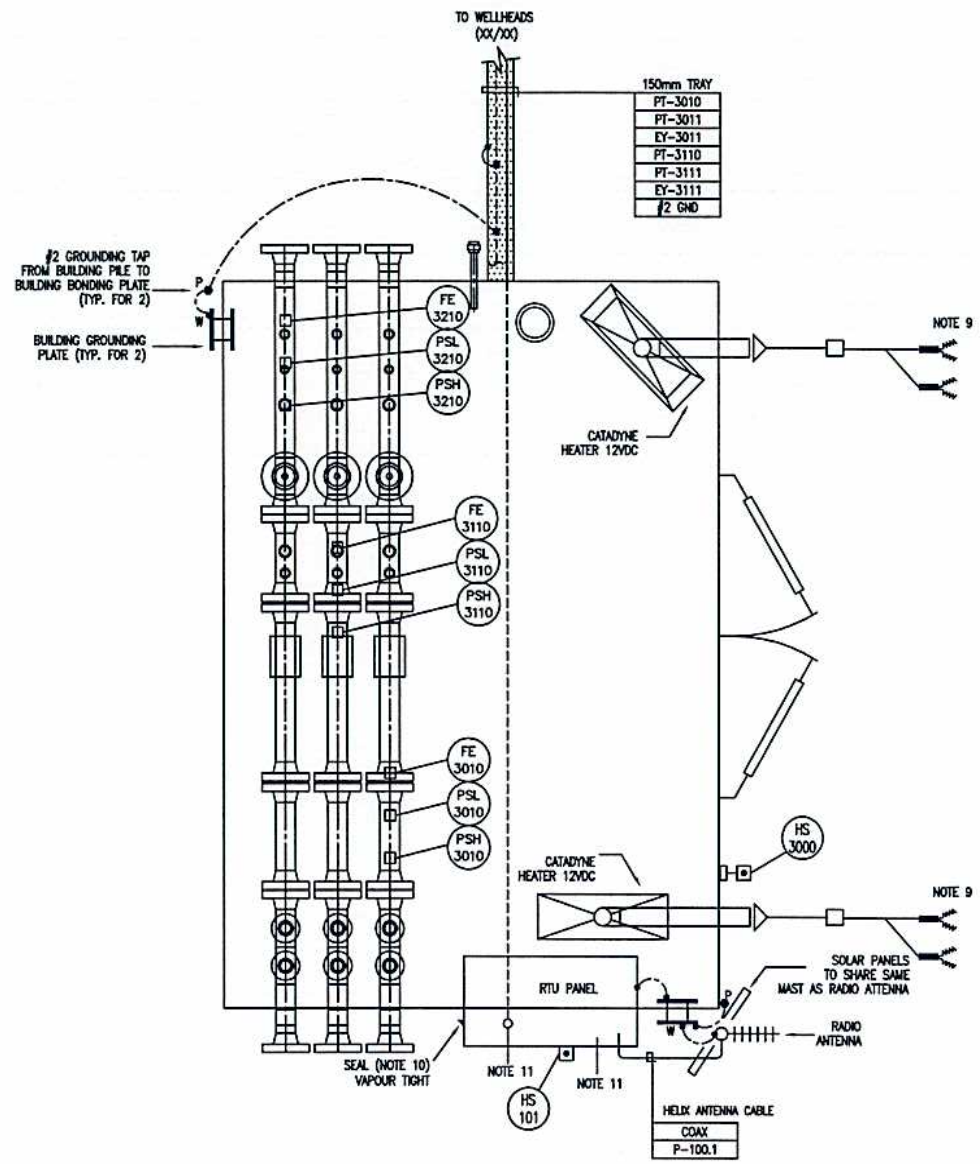

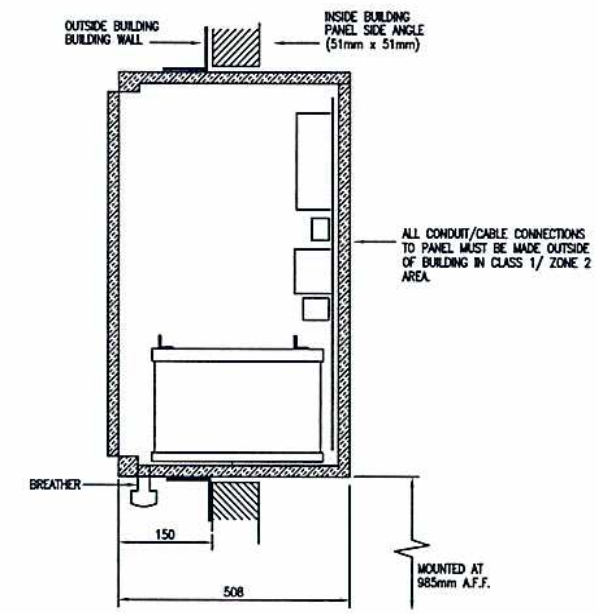

RTU CABINET SIDE VIEW
(NTS)

NOTES:

P, W — BOLTED TYPE CONNECTION – BURNDY SERVIT POST STYLE.
P – CONNECTION TO STEEL PILE
W – CONNECTION TO WALL OF BUILDING

■ COMPRESSION TYPE CONNECTION – BURNDY HYGROUND OR APPROVED EQUAL COMPRESSION TO BE MADE WITH BURNDY HYPRESS.

1. ELECTRICAL INSTALLATIONS SHALL CONFORM TO THE FOLLOWING AREA CLASSIFICATIONS:
   INSIDE BLDG. – CLASS I, ZONE 1, GROUP IIA & IIB, T2C
   OUTSIDE BLDG. – CLASS I, ZONE 2, GROUP IIA & IIB, T2C
2. ALL ELECTRICAL EQUIPMENT IS TO BE GROUNDED TO BLDG GROUND PLATE IN ACCORDANCE WITH THE C.E.C. SECTION 10.
3. WIRES, INSTRUMENTS, AND ENCLOSURES SHALL BE TAGGED AS SHOWN.
4. CONDUIT RUNS SHALL BE THE RESPONSIBILITY OF THE ELECTRICAL CONTRACTOR UNLESS OTHERWISE NOTED. ALL CONDUIT INSTALLED SHALL BE RIGID, THREADED, ALUMINUM.
5. ELECTRICAL INSTALLATIONS SHALL BE AS PER THE LATEST EDITION OF THE C.E.C. AND APPLICABLE AMENDMENTS.
6. ALL GROUND CONNECTIONS TO BE SILICONE COATED.
7. SEALS SHALL BE INSTALLED AS REQUIRED BY THE C.E.C.
8. BUILDING PILES SHALL BE USED AS GROUND ELECTRODES AT LOCATIONS AS INDICATED ON DRAWING.
9. BATTERY LEADS USED WITHIN THE DESIGNATED HAZARDOUS LOCATIONS MUST BE TYPE STW OR SOW AND HAVE AN APPROPRIATE CONNECTION FOR THE LOCATION. THE BATTERY LEADS MUST EXTEND OUTSIDE OF THE DESIGNATED HAZARDOUS AREA BEFORE THE LEADS ARE CONNECTED. THIS DISTANCE IS MINIMUM 25' (7620) FROM THE BUILDING.
10. RTU PANEL, CONDUIT, PIPING AND OTHER WALL PENETRATIONS SHALL BE SEALED TO PREVENT GAS MIGRATION.
11. ALL CONDUIT/CABLE CONNECTIONS TO PANEL MUST BE MADE OUTSIDE OF BUILDING IN CLASS 1/ZONE 2 AREA.

REFERENCE DRAWINGS	DWG. NO.
.	.
.	.
.	.
.	.

CAUTION : READ BEFORE EXCAVATION
ALL EXCAVATIONS MUST BE CARRIED OUT AS PER "ENCANA'S GROUND DISTURBANCE PRACTICE"

NO.	DATE (YYYY-MM-DD)	PROJECT DESCRIPTION	PROJ.	AFE	EPCM Co.	EPCM No.	APPD.
1	2011.11.18	RTU PANEL CONSTRUCTION	–	TBD	MAC ENG.	2011-0132	.
.	–	.	–	.	.	.	.
.	–	.	–	.	.	.	.
.	–	.	–	.	.	.	.
.	–	.	–	.	.	.	.
.	–	.	–	.	.	.	.
.	–	.	–	.	.	.	.
.	–	.	–	.	.	.

REV. NUMBER 1B-1	ISSUE STAGE	DATE (YYYY-MM-DD)	BY	CHKD.	APPD.
	Prelim. (A)	–	–	–	–
	Bid (B1)	2011.11.18	DS		
	Constr. (C)	–	–	–	–
	As-Built (D)	–	–	–	–
	–	–	–	–	–
	–	–	–	–	–
	–	–	–	–	–
	–	–	–	–	–

PERMIT STAMP | ENGINEER'S STAMP

PERMIT STAMP AND PROFESSIONAL STAMP AFFIXED ABOVE SHALL APPLY ONLY TO REV(s) 1B-1

encana natural gas

MAIN FAC.	BIGHORN TYPICALS
MAIN LOC.	VARIES
FAC. TYPE	PAD SITE
SITE LOC.	VARIES
SCALE	1:20
EPCM No.	2011-0132

EPCM Co. MAC ENGINEERING INC.

TITLE ELECTRICAL LAYOUT – POWER AND CONTROL
TRIPLE WET METER SKID U-301

AREA BIGHORN BU | CLASS N | FILE NO. BHT0148U

Date and Time Saved: 2010-11-10, 12:12 PM

Drawings Must Comply with Encana Drafting Standards (ECA-DDM-S-01)

PLOTTED: 18/11/2011 9:22:04 AM, BY: DAVID SIN
LAST SAVED: 18/11/2011 9:21:58 AM BY: DSIN
Filename: Y:\PROJECTS\2011\2011-0132 - ENCANA 2012 METER SKID RFQ RTU PANEL DESIGN\DRAWINGS\ELECTRICAL\ISSUED FOR BID\BHT0148U.DWG
Drawing: Q:\EGAD\ENCANA\1221B-BYE-TMP-DWGS\RRK-12218-E-TMP-10A.DWG TAB NAME: MODEL
Xrefs: eng-perm2.dwg, eng-jxc.dwg
T-400LANE ENCANA v2 Bm Title Block v7

Date and Time Saved:

Drawings Must Comply with Encana Drafting Standards (ECA-DDM-S-01)

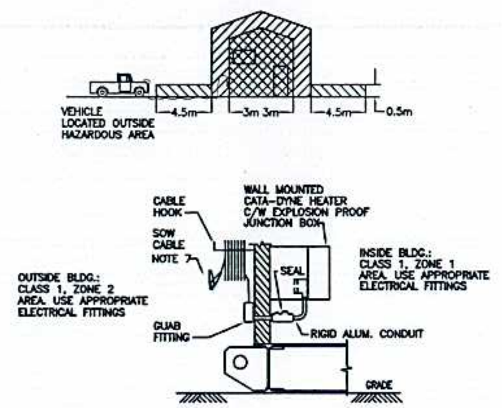

1 CATA-DYNE: 12V ELECTRICAL INSTALLATION
WALL MOUNT CLASS 1 AREA

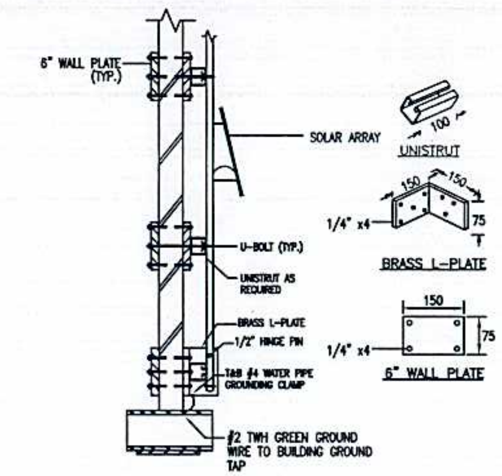

2 ANTENNA MOUNT – EXTERIOR

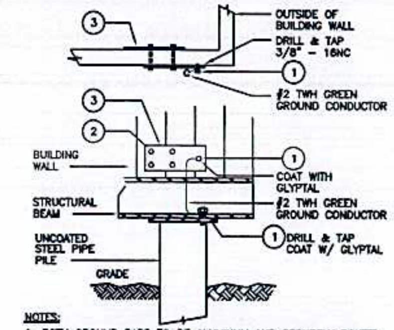

NOTES:
1. BOTH GROUND BARS TO BE ALUMINUM AND SECURELY BOLTED TOGETHER THROUGH THE WALL. WIRE BRUSH WALL SURFACE AND BARS TO BARE METAL AND APPLY PENETROX "A" ON PLATE SURFACE TO ENSURE GOOD CONTACT BETWEEN GROUND BARS AND WALL.

ITEM	QUAN.	DESCRIPTION	TYPE
1	2	SERVIT POST	BURNDY KC 23
2	4	ALUMINUM HEX BOLT C/W NUT & WASHERS	9.5mm LENGTH TO SUIT
3	2	300 x 75 x 6mm ALUMINUM PLATE	

3 FRAMELESS BUILDING GROUNDING
CLASSIFIED BUILDING

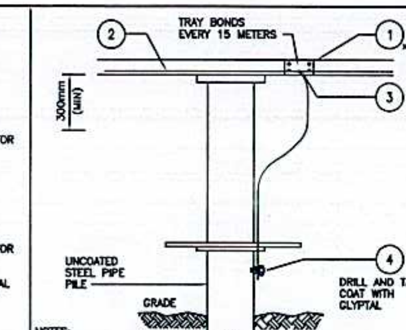

NOTES:
1. CONTRACTOR TO COAT EXPOSED CONNECTORS AND COPPER WITH GLYPTAL.
2. GROUND TRAY TO STEEL PILE AS SHOWN EVERY 15 METERS.

ITEM	QUAN.	DESCRIPTION	TYPE
1	AS REQ'D	CLASS E ALUMINUM TRAY	
2	AS REQ'D	#2 AWG GREEN INSULATED COPPER CONDUCTOR	
3	2	#2 CABLE TRAY GROUND CLAMP	BURNDY GCM28CG3 OR EQUAL
4	1	SERVIT POST	BURNDY KC 23 OR EQUAL

4 CABLE TRAY – MULTIPLE TRAYS

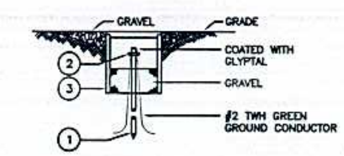

ITEM	QUAN.	DESCRIPTION	TYPE
1	1	19mm x 3000mm GALV. STEEL GROUND ROD	
2	1	CABLE TO PIPE GROUND CONNECTOR	BURNDY GK 6428 OR EQUAL
3	1	GALV. STEEL WELL C/W COVER 248mm Ø x 305mm	SLATER #22109 OR EQUAL

5 GROUNDWELL

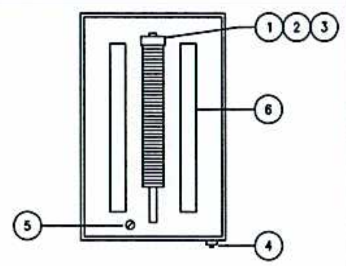

ITEM	QUAN.	DESCRIPTION	TYPE
1	AS REQ'D	TERMINAL BLOCK, C/W MOUNTING RAIL, END BRACKETS, END PLATE AND TERMINAL TAGS	WEIDMULLER AS PER B.O.M.
2	AS REQ'D	RAIL MOUNTED LAMICOID HOLDER	WEIDMULLER SCHT-5 #29246
3	AS REQ'D	ENGRAVED LAMICOID NAMEPLATE AS PER PLAN	ELECTRICAL CONTRACTOR
4	AS REQ'D	COVER/GASKET & BREATHER DRAIN	HOFFMAN A-HAM6
5	AS REQ'D	GROUND LUG, SUITABLE FOR #2 WIRE	BURNDY KD-23 OR EQUAL
6	AS REQ'D	50mm(W) x 50mm(H) WIREWAY C/W COVER. (WHITE FOR CONTROL, GREY FOR AC, BLUE FOR INTRINSICALLY SAFE)	PANDUIT OR EQUAL

6 STANDARD JUNCTION BOX DETAIL

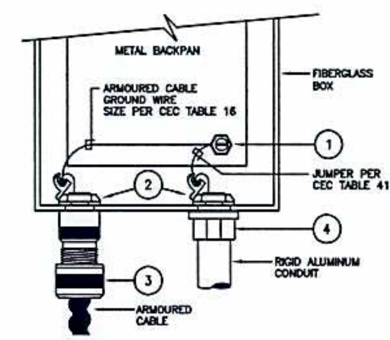

ITEM	QUAN.	DESCRIPTION	TYPE
1	1	GROUNDING LUG	BURNDY KA2U OR EQUAL
2	AS REQ'D	GROUNDING & BONDING LOCKNUT	T & B OR EQUAL
3	AS REQ'D	TECK CABLE CONNECTOR	T & B OR EQUAL
4	AS REQ'D	GROUNDING HUB	T & B OR EQUAL

7 BONDING CONNECTIONS AT INSTRUMENT JUNCTION BOX

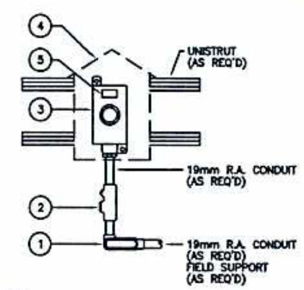

NOTES:
1. CONTRACTOR TO SUPPLY LAMICOID NAMEPLATE C/W TAG NUMBER.

ITEM	QUAN.	DESCRIPTION	TYPE
1	1	CONDUIT OUTLET BODY	CH #LR OR EQUAL
2	1	SEAL	CH #EYS OR EQUAL
3	1	CONTROL STATION (ESDD P.B.)	AS PER B of M
4	1	WEATHER GUARDHOOD (OUTDOOR ONLY)	
5	1	LAMICOID NAMEPLATE	

SHUTDOWN/CONTROL STATION
8 WALL MOUNTED INSTALLATION TO J.B.
CLASS 1, DIV. 2 AREA

SIDE VIEW

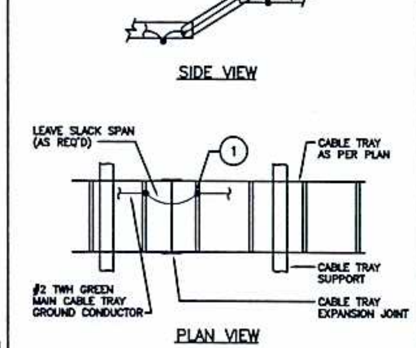

PLAN VIEW

NOTES:
1. CONTRACTOR SHALL COAT ALL EXPOSED CONNECTORS AND COPPER WITH GLYPTAL.

ITEM	QUAN.	DESCRIPTION	TYPE
1	AS REQ'D	CABLE TRAY GROUND CLAMP	GC2828 OR EQUAL

9 CABLE TRAY – EXPANSION JOINT

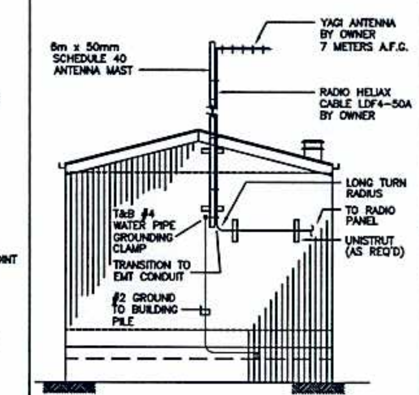

10 ANTENNA HOOK-UP

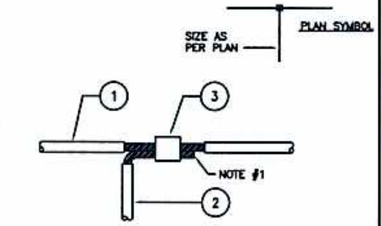

NOTES:
1. ABOVE GROUND CONDUCTOR CONNECTIONS SHALL BE COATED WITH GLYPTAL PAINT AND COVERED WITH SILICONE. UNDERGROUND CONDUCTOR CONNECTIONS SHALL BE COVERED WITH SILICONE. THE MINIMUM THICKNESS OF SILICONE SHALL NOT BE LESS THAN THE CONDUCTOR INSULATION.

ITEM	QUAN.	DESCRIPTION	TYPE
1	AS REQ'D	MAIN GROUND CONDUCTOR (U.G.)	TWH
2	AS REQ'D	BRANCH TAP (SIZE AS REQ'D)	TWH
3	1	COMPRESSION "C" TAP CONNECTOR	BURNDY YGHC OR EQUAL

11 "C" TAP TO EQUIPMENT AND BUILDINGS
N.T.S.

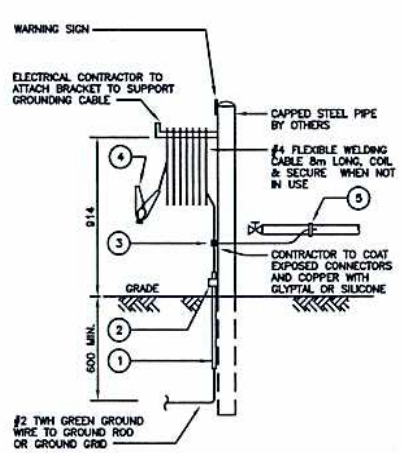

150 x 75
WARNING:
CONNECT TRUCK TO GROUND BEFORE CONNECTING PIPING

RED LAMICOID C/W 25mm WHITE LETTERING

NOTES:
1. CONTRACTOR TO SUPPLY & INSTALL WARNING SIGN.

ITEM	QUAN.	DESCRIPTION	TYPE
1	1	GROUND STUB-UP PROTECTION	19mm PVC CONDUIT
2	1	ONE HOLE STRAP	·
3	1	SERVIT POST	BURNDY K2C 28 OR EQUAL
4	1	GROUNDING CLAMP	BURNDY G1E4 CG3 OR EQUAL
5	1	GROUND CONNECTOR TO FIT PIPE SIZE	BURNDY GAR OR EQUAL

12 TRUCK GROUNDING INSTALLATION

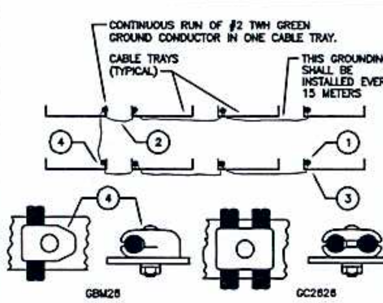

NOTES:
1. CONTRACTOR TO COAT CONNECTORS AND EXPOSED COPPER WITH GLYPTAL.
2. TYRAP GROUND CONDUCTOR TO TRAY RUNGS. LEAVE SMALL LOOP BETWEEN TRAYS.

ITEM	QUAN.	DESCRIPTION	TYPE
1	AS REQ'D	2 COPPER (LATERAL)	TWH
2	AS REQ'D	2 COPPER (JUMPER)	TWH
3	AS REQ'D	2 x 2 GROUND CONNECTOR	BURNDY GC2626 OR EQUAL
4	AS REQ'D	2 GROUND CONNECTOR	BURNDY GC2828 OR EQUAL

13 CABLE TRAY GROUNDING– PIPE RACKS

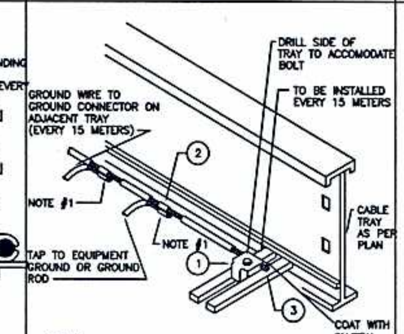

NOTES:
1. GROUND CONDUCTOR CONNECTIONS SHALL BE COATED WITH GLYPTAL PAINT AND COVERED WITH ELECTRICAL TAPE. MINIMUM THICKNESS OF ELECTRICAL TAPE SHALL NOT BE LESS THAN CONDUCTOR INSULATION.

ITEM	QUAN.	DESCRIPTION	TYPE
1	1	#2 GROUND CONNECTOR	BURNDY GBM28 OR EQUAL
2	AS REQ'D	COMPRESSION "C" TAP CONNECTOR	BURNDY GC2626 OR EQUAL
3	AS REQ'D	MAIN GROUND CONDUCTOR	TWH

14 CABLE TRAY – TAPS TO EQUIPMENT

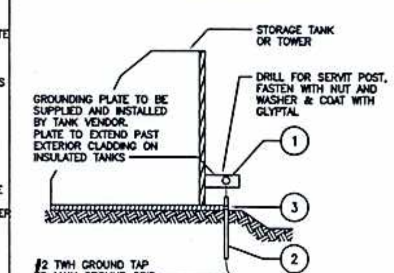

NOTES:
1. CONDUIT STUB-UP SHALL HAVE A MINIMUM HEIGHT OF 150mm ABOVE FINISHED GRADE.

ITEM	QUAN.	DESCRIPTION	TYPE
1	1	SERVIT POST	BURNDY KC 23 OR EQUAL
2	AS REQ'D	GROUND STUB-UP PROTECTION	19mm PVC
3	AS REQ'D	CONDUIT STRAP – ONE HOLE	T & B OR EQUAL

15 GROUNDING – STORAGE TANK/TOWER

REFERENCE DRAWINGS	DWG. NO.

CAUTION : READ BEFORE EXCAVATION
ALL EXCAVATIONS MUST BE CARRIED OUT AS PER "ENCANA'S GROUND DISTURBANCE PRACTICE"

NO.	DATE	PROJECT DESCRIPTION	PROJ.	AFE	EPCM Co.	EPCM No.	APPD.
1	2011.11.18	RTU PANEL CONSTRUCTION	-	TBD	MAC ENG.	2011-0132	·

REV.NUMBER 1B-1

ISSUE STAGE	DATE	BY	CHKD.	APPD.
Prelim. (A)	-	-	-	-
Bid (B1)	2011.11.18	DS	-	-
Constr. (C)	-	-	-	-
As-built (D)	-	-	-	-

PERMIT STAMP | ENGINEER'S STAMP

PERMIT STAMP AND PROFESSIONAL STAMP AFFIXED ABOVE SHALL APPLY ONLY TO REV(s) 1B-1

encana. natural gas

MAIN FAC. BIGHORN TYPICALS
MAIN LSD. VARIES
FAC TYPE PAD SITE
SITE LSD. VARIES
SCALE NTS (A1 Size)
EPCM No. 2011-0132
EPCM Co. MAC ENGINEERING INC.
TITLE ELECTRICAL INSTALLATION DETAILS
–
AREA BIGHORN BU
CLASS N
FILE NO. BHT0148V

PLOTTED: 18/11/2011 9:50:20 AM, BY:
LAST SAVED: BY:

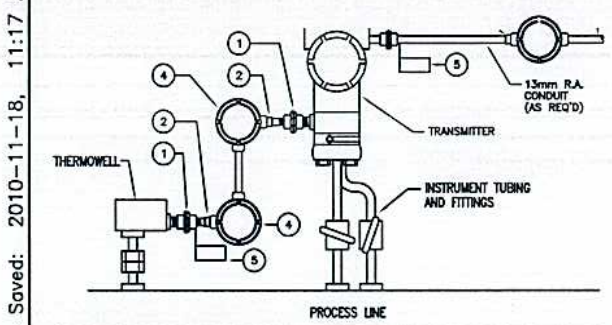

ITEM	QUAN.	DESCRIPTION	TYPE
1	AS REQ.	UNION	CH #UNY-105 OR EQUAL
2	AS REQ.	REDUCER (19mm x 13mm)	CH #RE-21 OR EQUAL
3	AS REQ.	CONDUIT OUTLET BODY	CH #GUAC-26 OR EQUAL
4	AS REQ.	CONDUIT OUTLET BODY	CH-GUAL-26 OR EQUAL
5	AS REQ.	LAMICOID NAMEPLATE	

NOTES:
1. CONTRACTOR TO SUPPLY LAMICOID NAMEPLATE C/W TAG NUMBER.
2. ROUTE CONDUIT TO SUIT MECHANICAL LAYOUT.

18 MULTIVARIABLE FLOW TRANSMITTER HOOK-UP
CLASS 1, ZONE 1 AREA

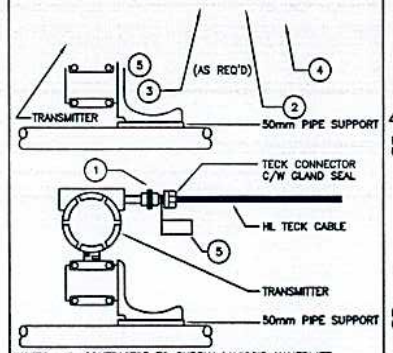

NOTES: 1. CONTRACTOR TO SUPPLY LAMICOID NAMEPLATE C/W TAG NUMBER.

ITEM	QUAN.	DESCRIPTION	TYPE
1	1	UNION	CH #UNY-105 OR EQUAL
2	1	REDUCER (19mm x 13mm)	CH #RE-21 OR EQUAL
3	1	SEAL	CH #EYS-116 OR EQUAL
4	1	CONDUIT OUTLET BODY	CH #GUAC-26 OR EQUAL
5	1	LAMICOID NAMEPLATE	

19 PRESSURE & FLOW TRANSMITTER HOOK-UP
CLASS 1, DIV. 1 AREA

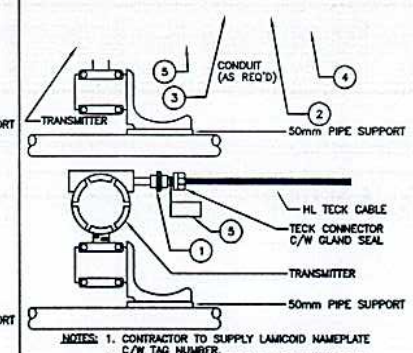

NOTES: 1. CONTRACTOR TO SUPPLY LAMICOID NAMEPLATE C/W TAG NUMBER.
2. TECK GLAND SEAL MAY NOT BE REQUIRED, IF CABLE LENGTH EXCEEDS 10 METERS.

ITEM	QUAN.	DESCRIPTION	TYPE
1	1	UNION	CH #UNY-105 OR EQUAL
2	1	REDUCER (19mm x 13mm)	CH #RE-21 OR EQUAL
3	1	SEAL	CH #EYS-116 OR EQUAL
4	1	CONDUIT OUTLET BODY	CH #GUAC-26 OR EQUAL
5	1	LAMICOID NAMEPLATE	

20 PRESSURE & FLOW TRANSMITTER HOOK-UP
CLASS 1, DIV. 2 AREA

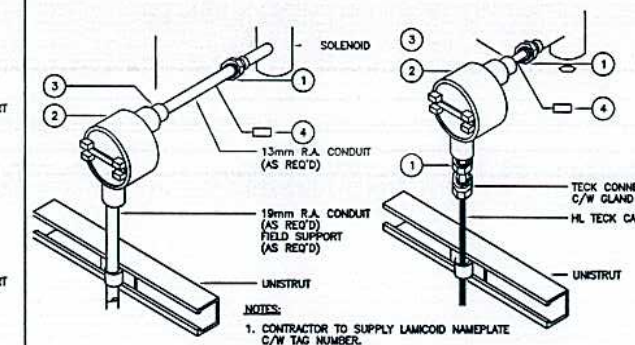

NOTES:
1. CONTRACTOR TO SUPPLY LAMICOID NAMEPLATE C/W TAG NUMBER.

ITEM	QUAN.	DESCRIPTION	TYPE
1	1	UNION	CH #UNY-105 OR EQUAL
2	1	CONDUIT OUTLET BODY	CH #GUAB-26 OR EQUAL
3	1	REDUCER (19mm x 13mm)	CH #RE-21 OR EQUAL
4	1	LAMICOID NAMEPLATE	–

21 SOLENOID HOOK-UP
CLASS 1, DIV. 1 AREA

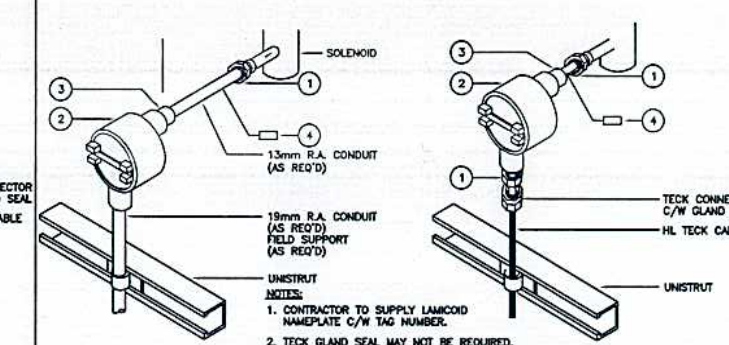

NOTES:
1. CONTRACTOR TO SUPPLY LAMICOID NAMEPLATE C/W TAG NUMBER.
2. TECK GLAND SEAL MAY NOT BE REQUIRED, DEPENDING ON CABLE LENGTH.

ITEM	QUAN.	DESCRIPTION	TYPE
1	1	UNION	CH #UNY-105 OR EQUAL
2	1	CONDUIT OUTLET BODY	CH #GUAB-26 OR EQUAL
3	1	REDUCER (19mm x 13mm)	CH #RE-21 OR EQUAL
4	1	LAMICOID NAMEPLATE	–

22 SOLENOID HOOK-UP
CLASS 1, DIV. 2 AREA

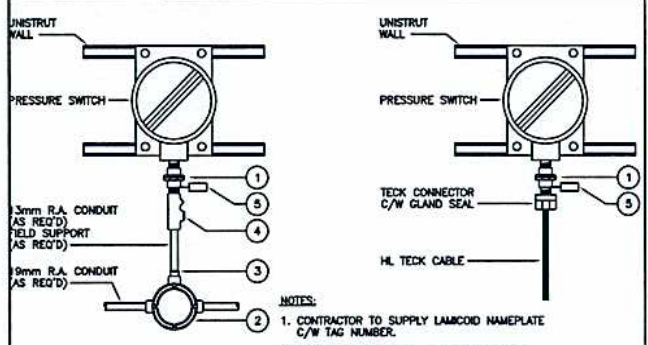

NOTES:
1. CONTRACTOR TO SUPPLY LAMICOID NAMEPLATE C/W TAG NUMBER.
2. TECK GLAND SEAL MAY NOT BE REQUIRED, DEPENDING ON CABLE LENGTH.

ITEM	QUAN.	DESCRIPTION	TYPE
1	1	UNION	CH #UNY-105 OR EQUAL
2	1	CONDUIT OUTLET BODY	CH #GUAT-26 OR EQUAL
3	1	REDUCER (19mm x 13mm)	CH #RE-21 OR EQUAL
4	1	SEAL	CH #EYS-116 OR EQUAL
5	1	LAMICOID NAMEPLATE	–

23 PRESSURE SWITCH HOOK-UP
CLASS 1, DIV. 2 AREA

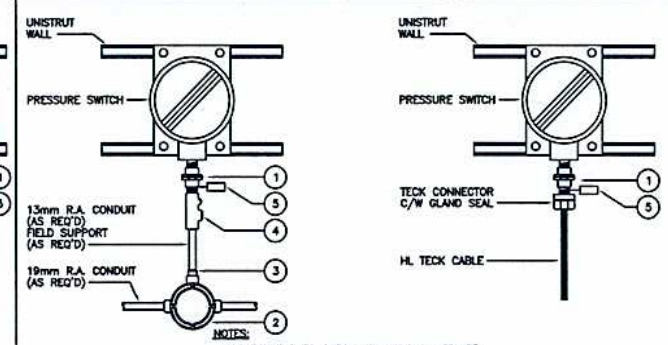

NOTES:
1. CONTRACTOR TO SUPPLY LAMICOID NAMEPLATE C/W TAG NUMBER.

ITEM	QUAN.	DESCRIPTION	TYPE
1	1	UNION	CH #UNY-105 OR EQUAL
2	1	CONDUIT OUTLET BODY	CH #GUAT-26 OR EQUAL
3	1	REDUCER (19mm x 13mm)	CH #RE-21 OR EQUAL
4	1	SEAL	CH #EYS-116 OR EQUAL
5	1	LAMICOID NAMEPLATE	–

24 PRESSURE SWITCH HOOK-UP
CLASS 1, DIV. 1 AREA

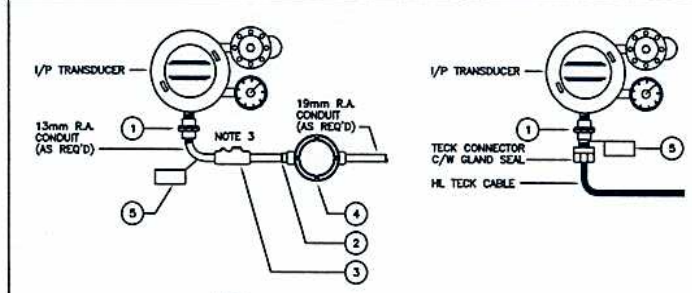

NOTES:
1. CONTRACTOR TO SUPPLY LAMICOID NAMEPLATE C/W TAG NUMBER.
2. CONDUIT SEAL MUST BE INSTALLED AND POURED.

ITEM	QUAN.	DESCRIPTION	TYPE
1	1	UNION	CH #UNY-105 OR EQUAL
2	1	REDUCER (19mm x 13mm)	CH #RE-21 OR EQUAL
3	1	SEAL	CH #EYS-116 OR EQUAL
4	1	CONDUIT OUTLET BODY	CH #GUAC-26 OR EQUAL
5	1	LAMICOID NAMEPLATE	

25 I/P TRANSDUCER HOOK-UP
CLASS 1, DIV. 2 AREA

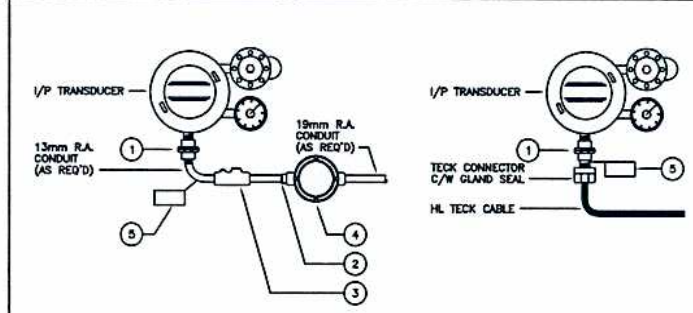

NOTES:
1. CONTRACTOR TO SUPPLY LAMICOID NAMEPLATE C/W TAG NUMBER.

ITEM	QUAN.	DESCRIPTION	TYPE
1	1	UNION	CH #UNY-105 OR EQUAL
2	1	REDUCER (19mm x 13mm)	CH #RE-21 OR EQUAL
3	1	SEAL	CH #EYS-116 OR EQUAL
4	1	CONDUIT OUTLET BODY	CH #GUAC-26 OR EQUAL
5	1	LAMICOID NAMEPLATE	

26 I/P TRANSDUCER HOOK-UP
CLASS 1, DIV. 1 AREA

REFERENCE DRAWINGS	DWG. NO.
.	.
.	.
.	.
.	.

CAUTION : READ BEFORE EXCAVATION
ALL EXCAVATIONS MUST BE CARRIED OUT AS PER "ENCANA'S GROUND DISTURBANCE PRACTICE"

NO.	DATE (YYYY-MM-DD)	PROJECT DESCRIPTION	PROJ.	AFE	EPCM Co.	EPCM No.	APPD.
1	2011.11.18	RTU PANEL CONSTRUCTION	–	TBD	MAC ENG.	2011-0132	.
.	–	.	–	.	.	.	.
.	–	.	–	.	.	.	.
.	–	.	–	.	.	.	.
.	–	.	–	.	.	.	.
.	–	.	–	.	.	.	.
.	–	.	–	.	.	.	.
.	–	.	–	.	.	.	.
.	–	.	–	.	.	.	.

REV.NUMBER 1B-1

ISSUE STAGE	DATE (YYYY-MM-DD)	BY	CHKD.	APPD.
Prelim. (A)	–	–	–	–
Bid (B1)	2011.11.18	DS		
Constr. (C)	–	–	–	–
As-Built (D)	–	–	–	–
–	–	–	–	–
–	–	–	–	–
–	–	–	–	–
–	–	–	–	–

PERMIT STAMP | ENGINEER'S STAMP

PERMIT STAMP AND PROFESSIONAL STAMP AFFIXED ABOVE SHALL APPLY ONLY TO REV(s) 1B-1

encana natural gas

MAIN PANEL	BIGHORN TYPICALS
MAIN LOA.	VARIES
LOC. TYPE	PAD SITE
LOC. LOA.	VARIES
SCALE	N.T.S. (A1 Size)
EPCM No.	2011-0132

EPCM Co. MAC ENGINEERING INC.

TITLE ELECTRICAL INSTALLATION DETAILS
–

AREA BIGHORN BU | CLASS N | FILE NO. BHT0148W

Date and Time Saved: 2010-11-18, 11:17 AM

Drawings Must Comply with Encana Drafting Standards (ECA-DDM-S-01)

PLOTTED: 18/11/2011 9:46:37 AM, BY: KATHERINE PALMA
LAST SAVED: 17/11/2011 8:48:13 PM, BY: DSIM

FILE: V:\PROJECTS\2011\2011-0132 - ENCANA 2012 METER SKID RFQ RTU PANEL DESIGN\DRAWINGS\ELECTRICAL\ISSUED FOR BID\BHT0148W.DWG