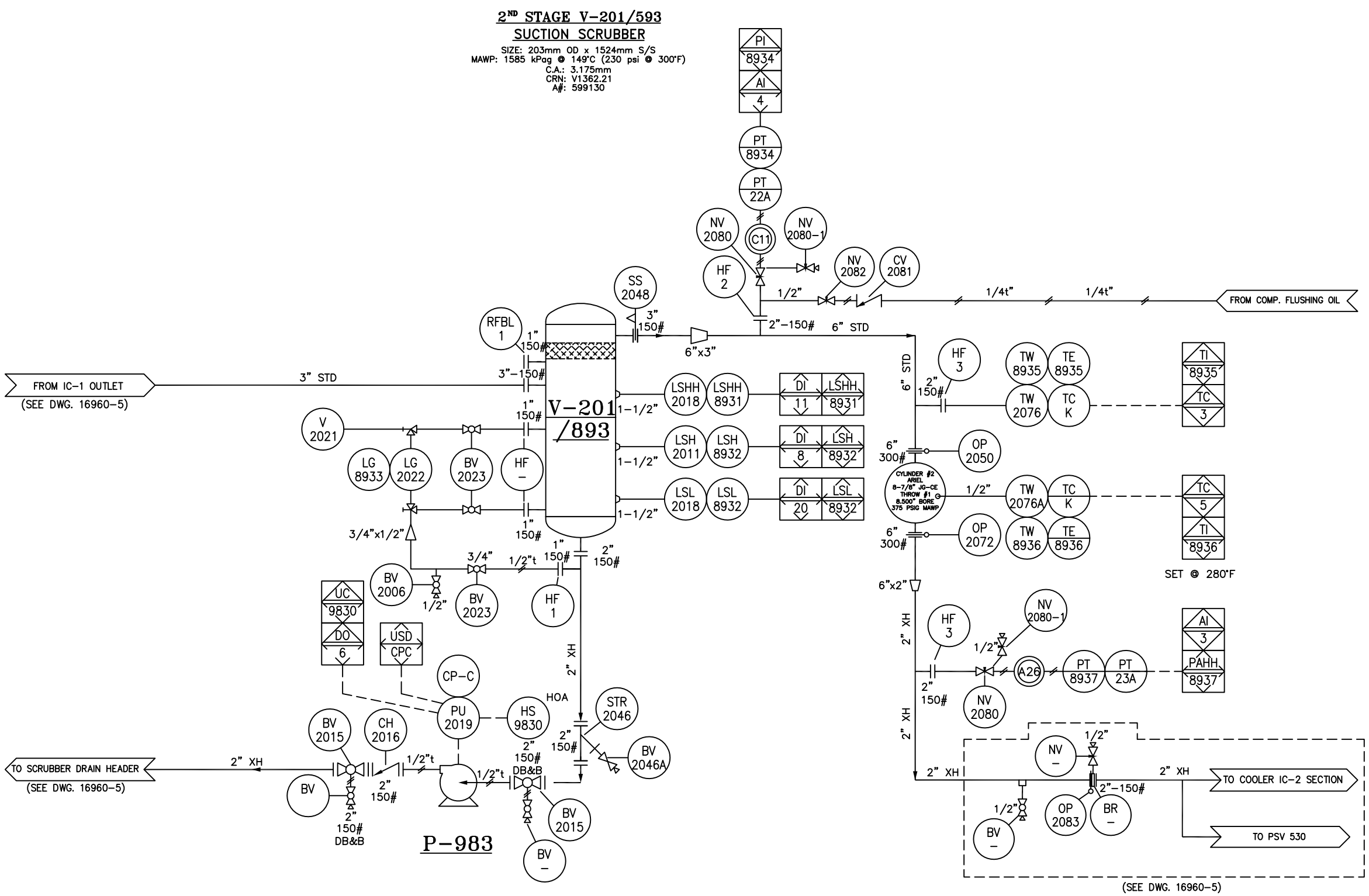

BILL OF MATERIAL

NOTE: ITEM No. = FIRST DIGIT (DWG REF.), LAST TWO DIGITS (item No.)

ITEM	PART NO.	QTY.	DESCRIPTION
2006	803774	1	VALVE, BALL, 1/2"-3000CL, NPT, RP, LH, NACE, NUTRON, 5A-T3-R05S30S2
2011/	804460	1	ENDRESS&HAUSER LEVEL SWITCH,1" NPT, 6" INSERTION, DESITY SENSING.
8932			(PN:FTL51-SGN2CB9E3P)
2015	804350	2	VALVE, BALL, 2" 150# RF RP TRUNNION, DBB-NACE, KF (E375B-829G611)
2016	804355	1	VALVE, CHECK, PISTON, 2"-150CL,RF, NACE, NEWCO (41F-FS4/3-INT)
2018/	804930	2	LEVEL SWITCH, LINC, MODEL # L471-01 1-1/2" XP
8931/8932			
2019/	804101	1	PUMP,DIAPHRAGM,3/4" NPT,WANNER HYDRA-CELL (D03),C/W WEG TEFC
CP-C			MOTOR .5HP 120V/1/60HZ 184T FRAME,CMN BASE,COUPLING & GUARD
2021	803005	1	VALVE, GAUGE, SET, 3/4"M VESSEL X 1/2"F DRAIN X 1/2"F GAUGE, NPT,
			NACE, QUALITY Q146NACETFE
2022/	801361	1	GAUGE, LEVEL, SINGLE SECTION, REFLEX, 10.25" VISIBLE LENGTH,
8933			1/2" NPT GAUGE CONN, QUALITY Q17R20
2023	803965	3	VALVE, BALL, 3/4-3000CL, RP, LH, NACE, NUTRON (T3-R07S30S)
2046	804354	1	Y STRAINER, 2" 150# RF, 1/8 304SS, ALTA (NYF 150)
2046A	803774	1	VALVE, BALL, 1/2"-3000CL, NPT, RP, LH, NACE, NUTRON, 5A-T3-R05S30S2
2048	801985	1	SUCTION SCREEN,CONE,3"-150CL STD,150%CS,316SS 40 MESH
2050	804673	1	PLATE,ORIFICE,6"-300CL STD, RF, 3.75" ID, 1/8" THK., A1011 CS
2072	804701	1	PLATE,ORIFICE,6"-300CL STD, RF, 3.0" ID, 1/8" THK., 316 SS
2076/	804454	1	THERMOWELL, 3/4"X 1/2" NPT, 8" STEM LENGTH, 6" U, 0.260 BORE, 316SS
8935			PN (PTW-660)
2076A/	803070	1	THERMOWELL, 3/4 "X 1/2" NPT, 6" STEM LENGTH, 4-1/2" U,
8936			0.260 BORE, 316SS
2080	803687	2	VALVE, NEEDLE, 3/4 X (3)1/2 MXF NPT, 6000 PSIG WP, 316SS,
			CENTURY (CM11L1M64TCNT) MULIT-PORT EXTENDED BODY
2081	803294	1	CHECK VALVE, 1/4"T X 1/4"T, 1 PSIG CRACKING PRESSURE, SS,
			SWAGELOK, SS-CHS4-1
2082	803625	1	VALVE, NEEDLE, 1/2 X 1/2 MXF NPT, 6000 PSIG WP, 316SS,
			CENTURY (CM2-1-M44TDNT)
2080-1	803625	2	VALVE, NEEDLE, 1/2 X 1/2 MXF NPT, 6000 PSIG WP, 316SS,
			CENTURY (CM2-1-M44TDNT)
2083	804702	1	ORIFICE GASKET,FLEXITALLIC, GREY STRIPE, 2"-150CL SCH80, RF, 0.875 ID,
			1/8" THK., 304 SS
RFBL-1	801003	1	FLANGE,RF BLIND,1-150CL, SA105N
HF-1	803875	4	FLANGE,RF HUBBED BLIND,1-150CL C/W 3/4" NPT TAP, SA105N
HF-2	801120	2	FLANGE,RF THD,3/4-150CL, SA105N
HF-3	803876	1	FLANGE,RF HUBBED BLIND,2-150CL C/W 3/4" NPT TAP, SA105N
PIT-8934	N/A	1	PRESSURE TRANSMITTER, 0-1034 kPa, ROSEMOUNT
TE-8935	804455	1	THERMOCOUPLE, TYPE K, 8" PROBE, 30' SS ARMOUR LEAD,
			PIC (PN 2008-6-K-360) C/W CONNECTORS M & F (1015-K, 1065-K)
TE-8936	804227	1	THERMOCOUPLE, 6" PROBE, "K" TYPE, 30' LEAD
			(PN:K48G-006-00-18-F38360-2)
PIT-8937	N/A	1	PRESSURE TRANSMITTER, 0-5516 kPa, ROSEMOUNT

CUSTOMER CONNECTIONS

TAG	DESCRIPTION	SIZE/(VOLTAGE)	TAG	DESCRIPTION	SIZE/(VOLTAGE)

GENERAL NOTES

1. PROCESS INSTRUMENT LINES: 316SS 0.065" WALL TUBING c/w SWAGELOK 316SS FITTINGS w/ 316SS BACK FERRULE & 316SS FRONT FERRULE UNLESS OTHERWISE NOTED
2. UTILITY INSTRUMENT LINES: 316SS 0.065" WALL TUBING c/w SWAGELOK 316SS FITTINGS w/ 316SS BACK FERRULE & 316SS FRONT FERRULE UNLESS OTHERWISE NOTED
3. INSTRUMENT MEDIUM: CLEAN, DRY AIR
4. ALL PROCESS PIPING TO BE PER ENCANA PIPING SPEC. ECA-L-3 FOR SOUR SERVICE. EXTERIOR PIPING / FITTINGS TO BE FABRICATED USING LOW TEMP MATERIALS.
5. ALL FITTINGS FOR SOUR PIPING LESS THAN OR EQUAL TO 1-1/2" TO BE SW. 2" PIPING OR GREATER TO BE FLANGED.
6. CORROSION ALLOWANCE: 1/8" (0.125") (PROCESS ONLY)
7. AREA CLASSIFICATION: CLASS 1, ZONE 2 (FE STUDY BY NGC)
8. VENT TO SAFE AREA. "SAFE AREA" SHALL BE AN AREA OUTSIDE ENCLOSURE. VENTS SHALL BE DIRECTED TO AVOID RECIRCULATION INTO THE BUILDING VIA VENTS, INGESTION INTO THE ENGINE AIR INTAKE OR IMPINGEMENT, ON ANY HOT SURFACES (IE. SILENCERS, CATALYTIC CONVERTERS,ENGINE EXHAUST PIPING, ETC.)
9. SURFACE PREP: SSPC-SP2 (ALL PROCESS VESSELS & SPOOLS TO BE PICKLED) PRIMER: CLOVERDALE T1010D FINISH: CLOVERDALE F34 INDUSTRIAL ENAMEL (WARM GREY)
10. PROCESS HARDWARE: STUDS: B7M NUTS: 2HM GASKETS: FLEXITALLIC FLEXICARB (GREY STRIPE)

AS BUILT

BY:

DATE:

THIS DOCUMENT IS SUPPLIED IN CONFIDENCE. REPRODUCTION OR DISTRIBUTION IN WHOLE OR PART WITHOUT THE WRITTEN PERMISSION OF NGC COMPRESSION SOLUTIONS IS STRICTLY PROHIBITED.

REV.	BY	CHK'D	REVISION DESCRIPTION	DATE
3	MER	SZ	AS-BUILT	25-NOV-10
2	MER	SZ	CNG DESC., ADD 2081, 2082, 8934 & 8937	04-AUG-10
1	MER	SZ	UPDATE DRAWING 16960-5	31-JUL-10
0	MER	SZ	ISSUED FOR FABRICATION	07-JUN-10
A	MER	AH	ISSUED FOR APPROVAL	30-DEC-09

NGC COMPRESSION SOLUTIONS

TITLE: STAGE TWO PRESSURE VESSEL SYSTEM
ARIEL JGA/2; BALDOR 50HP; AXC 32EH
3 STAGE, 0-5% SOUR NATURAL GAS COMPRESSOR PACKAGE

END USER/CONSULTANT: ENCANA CORPORATION

CUST. P.O. No.:

LOCATION: SATURN PHASE II, BC
LSD: 09-27-079-17 W6M

REVISION: 3

DWG. REFERENCE:

DRAWN:	MER	W.O. No.	16960-NC
DATE:	30-DEC-09	UNIT No.	–
CHK'D:	SZ	No. REQ'D:	ONE (1)
PROJ. MGR:	SZ	SCALE:	N.T.S.

DWG. No. 16960-20
(SHEET 1 OF 1)