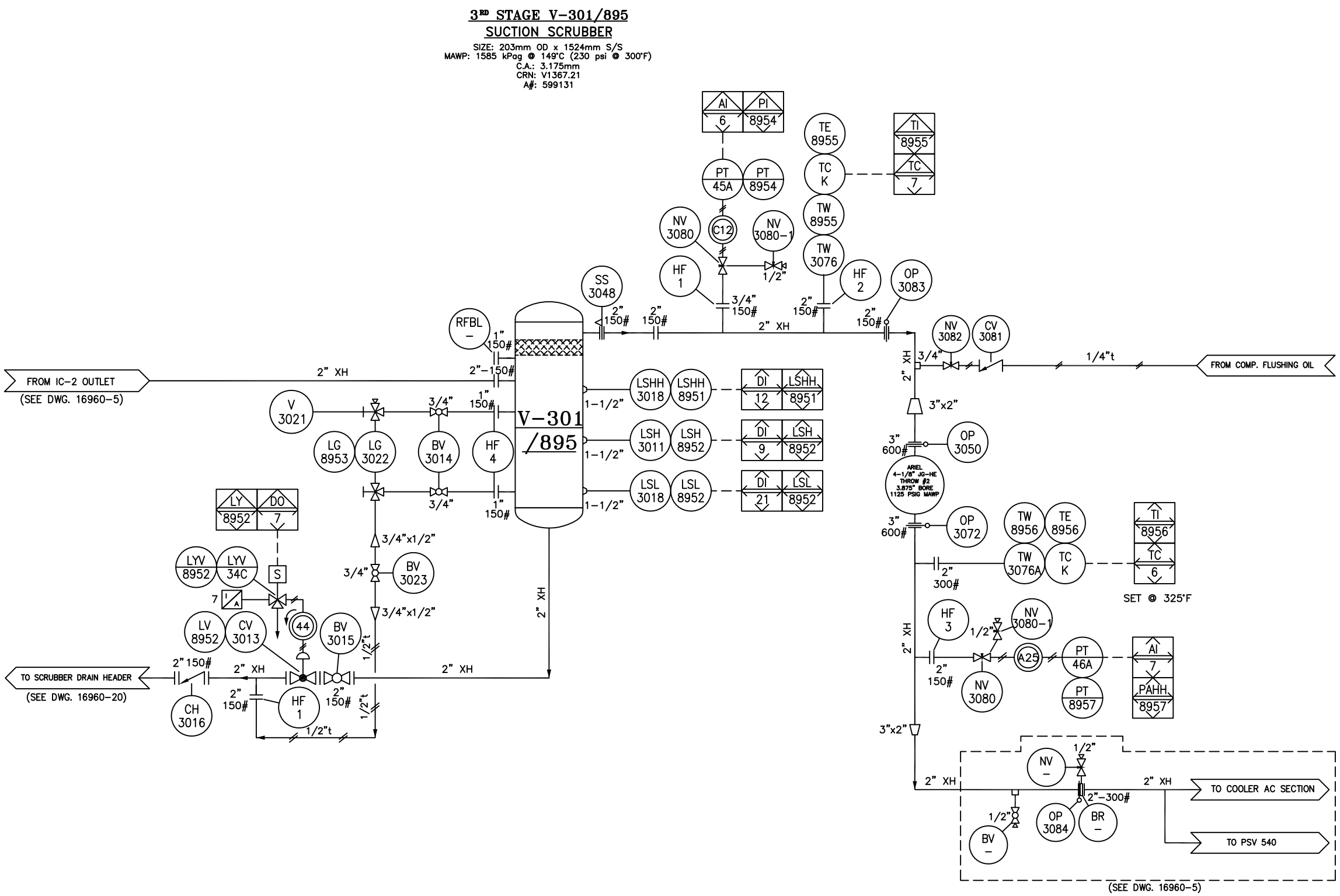

BILL OF MATERIAL

NOTE: ITEM No. = FIRST DIGIT (DWG REF.), LAST TWO DIGITS (item No.)

ITEM	PART NO.	QTY.	DESCRIPTION
3011	804460	1	ENDRESS&HAUSER LEVEL SWITCH,1" NPT, 6" INSERTION, DESITY SENSING.
8952			(PN:FTL51-SGN2CB9E3P)(MUST USE WITH PN804461)
3013/	804379	1	VALVE, CONTROL, FISHER D4 GLOBE, 2"150# RF, 0-33PSI, F.C. 3/4" TRIM,
8952			NACE, SPRING TO OPEN. (DUMP VALVE APP.), D4-X2Z2K/N
3014	803965	2	VALVE, BALL, 3/4-3000CL, RP, LH, NACE, NUTRON (T3-R07S30S)
3015	803776	1	VALVE, BALL, 2"-150CL RF, RP, LH, NACE, NUTRON (T3R20R01S)
3016	804355	1	VALVE, CHECK, PISTON, 2"-150CL,RF, NACE, NEWCO (41F-FS4/3-INT)
3018/	804930	2	LEVEL SWITCH, LINC, MODEL # L471-01 1-1/2" XP
8951/8952			
3021	803005	1	VALVE, GAUGE, SET, 3/4"M VESSEL X 1/2"F DRAIN X 1/2"F GAUGE, NPT,
			NACE, QUALITY Q146NACETFE
3022/	801361	1	GAUGE, LEVEL, SINGLE SECTION, REFLEX, 10.25" VISIBLE LENGTH,
8953			1/2" NPT GAUGE CONN, QUALITY Q17R20
3023	803965	1	VALVE, BALL, 3/4-3000CL, RP, LH, NACE, NUTRON (T3-R07S30S)
3048	801969	1	SUCTION SCREEN,CONE,2"-150CL,150%
3050	804703	1	PLATE,ORIFICE,3"-600CL SCH 80, RF, 1.75" ID, 1/8" THK., 304 SS
3072	804704	1	PLATE,ORIFICE,3"-600CL SCH 80, RF, .9375" ID, 1/8" THK., 304 SS
3076/	804454	1	THERMOWELL, 3/4"X 1/2" NPT, 8" STEM LENGTH, 6" U, 0.260 BORE, 316SS
8955			PN (PTW-660)
3076A/	804454	1	THERMOWELL, 3/4"X 1/2" NPT, 8" STEM LENGTH, 6" U, 0.260 BORE, 316SS
8955			PN (PTW-660)
3080	803687	2	VALVE, NEEDLE, 3/4 X (3)1/2 MXF NPT, 6000 PSIG WP, 316SS,
			CENTURY (CM11L1M64TCNT) MULIT-PORT EXTENDED BODY
3081	803294	1	CHECK VALVE, 1/4"T X 1/4"T, 1 PSIG CRACKING PRESSURE, SS,
			SWAGELOK, SS-CHS4-1
3082	803625	1	VALVE, NEEDLE, 1/2 X 1/2 MXF NPT, 6000 PSIG WP, 316SS,
			CENTURY (CM2-1-M44TDNT)
3083	804702	1	ORIFICE GASKET,FLEXITALLIC, GREY STRIPE, 2"-150CL SCH80, RF, 0.875 ID,
			1/8" THK., 304 SS
3084	804702	1	ORIFICE GASKET,FLEXITALLIC, GREY STRIPE, 2"-150CL SCH80, RF, 0.875 ID,
			1/8" THK., 304 SS
3080-1	803625	2	VALVE, NEEDLE, 1/2 X 1/2 MXF NPT, 6000 PSIG WP, 316SS,
			CENTURY (CM2-1-M44TDNT)
HF-1	803876	2	FLANGE,RF HUBBED BLIND,2-150CL C/W 3/4" NPT TAP, SA105N
HF-2	803876	1	FLANGE,RF HUBBED BLIND,2-150CL C/W 3/4" NPT TAP, SA105N
HF-3	803798	1	FLANGE,RF HUBBED BLIND,2-300CL C/W 3/4" NPT TAP, SA105N
HF-4	803875	3	FLANGE,RF HUBBED BLIND,1-150CL C/W 3/4" NPT TAP, SA105N
RFBL	801003	1	FLANGE,RF BLIND,1-150CL, SA105N
PIT-8954	N/A	1	PRESSURE TRANSMITTER, 0-5516 kPa, ROSEMOUNT
TE-8955	804455	1	THERMOCOUPLE, TYPE K, 8" PROBE, 30' SS ARMOUR LEAD,
			PIC (PN 2008-6-K-360) C/W CONNECTORS M & F (1015-K, 1065-K)
TE-8956	804455	1	THERMOCOUPLE, TYPE K, 8" PROBE, 30' SS ARMOUR LEAD,
			PIC (PN 2008-6-K-360) C/W CONNECTORS M & F (1015-K, 1065-K)
PIT-8957	N/A	1	PRESSURE TRANSMITTER, 0-5516 kPa, ROSEMOUNT

CUSTOMER CONNECTIONS

TAG	DESCRIPTION	SIZE/(VOLTAGE)	TAG	DESCRIPTION	SIZE/(VOLTAGE)

GENERAL NOTES

1. PROCESS INSTRUMENT LINES: 316SS 0.065" WALL TUBING c/w SWAGELOK 316SS FITTINGS w/ 316SS BACK FERRULE & 316SS FRONT FERRULE UNLESS OTHERWISE NOTED
2. UTILITY INSTRUMENT LINES: 316SS 0.065" WALL TUBING c/w SWAGELOK 316SS FITTINGS w/ 316SS BACK FERRULE & 316SS FRONT FERRULE UNLESS OTHERWISE NOTED
3. INSTRUMENT MEDIUM: CLEAN, DRY AIR
4. ALL PROCESS PIPING TO BE PER ENCANA PIPING SPEC. ECA-L-3 FOR SOUR SERVICE. EXTERIOR PIPING / FITTINGS TO BE FABRICATED USING LOW TEMP MATERIALS.
5. ALL FITTINGS FOR SOUR PIPING LESS THAN OR EQUAL TO 1-1/2" TO BE SW. 2" PIPING OR GREATER TO BE FLANGED.
6. CORROSION ALLOWANCE: 1/8" (0.125") (PROCESS ONLY)
7. AREA CLASSIFICATION: CLASS 1, ZONE 2 (FE STUDY BY NGC)
8. VENT TO SAFE AREA. "SAFE AREA" SHALL BE AN AREA OUTSIDE ENCLOSURE. VENTS SHALL BE DIRECTED TO AVOID RECIRCULATION INTO THE BUILDING VIA VENTS, INGESTION INTO THE ENGINE AIR INTAKE OR IMPINGEMENT, ON ANY HOT SURFACES (IE. SILENCERS, CATALYTIC CONVERTERS,ENGINE EXHAUST PIPING, ETC.)
9. SURFACE PREP: SSPC-SP2 (ALL PROCESS VESSELS & SPOOLS TO BE PICKLED) PRIMER: CLOVERDALE T101QD FINISH: CLOVERDALE F34 INDUSTRIAL ENAMEL (WARM GREY)
10. PROCESS HARDWARE: STUDS: B7M NUTS: 2HM GASKETS: FLEXITALLIC FLEXICARB (GREY STRIPE)

AS BUILT

BY:

DATE:

THIS DOCUMENT IS SUPPLIED IN CONFIDENCE. REPRODUCTION OR DISTRIBUTION IN WHOLE OR PART WITHOUT THE WRITTEN PERMISSION OF NGC COMPRESSION SOLUTIONS IS STRICTLY PROHIBITED.

REV.	BY	CHK'D	REVISION DESCRIPTION	DATE
4	MER	SZ	AS-BUILT	25-NOV-10
3	MER	SZ	ADD ITEMS 3050 & 3072 TO BOM	17-AUG-10
2	MER	SZ	CNG DESC., ADD ITEMS 8954 & 8957	04-AUG-10
1	MER	SZ	UPDATE DRAWING 16960-5	31-JUN-10
0	MER	SZ	ISSUED FOR FABRICATION	07-JUN-10
A	MER	AH	ISSUED FOR APPROVAL	30-DEC-09

NGC COMPRESSION SOLUTIONS

TITLE: STAGE THREE PRESSURE VESSEL SYSTEM
ARIEL JGA/2; BALDOR 50HP; AXC 32EH
3 STAGE, 0-5% SOUR NATURAL GAS COMPRESSOR PACKAGE

END USER/CONSULTANT: ENCANA CORPORATION

LOCATION: SATURN PHASE II, BC
LSD: 09-27-079-17 W6M

CUST. P.O. No.:

REVISION: 4

DWG. REFERENCE: –

DRAWN:	MER	W.O. No.	16960-NC
DATE:	30-DEC-09	UNIT No.	–
CHK'D:	SZ	No. REQ'D:	ONE (1)
PROJ. MGR:	SZ	SCALE:	N.T.S.

DWG. No. 16960-30
(SHEET 1 OF 1)