BILL OF MATERIALS

MARK	QTY.	DESCRIPTION	LENGTH
1	2	W6 x 15#	11'-10"
2	6	W6 x 15#	7'-3¾"
3	2	C6 x 8.2#	2'-9¾"
4	4	EAR PLATE, 3/4" THK	
5	SQ.FT	CHECKER PLATE, 3/16" THK x 12'x8'	96sq'
6	SQ.FT	BASE PLATE, 1/2" THK x 32"x32"	
		INCLUSIVE OF 6% WEIGHT:	2150 lbs

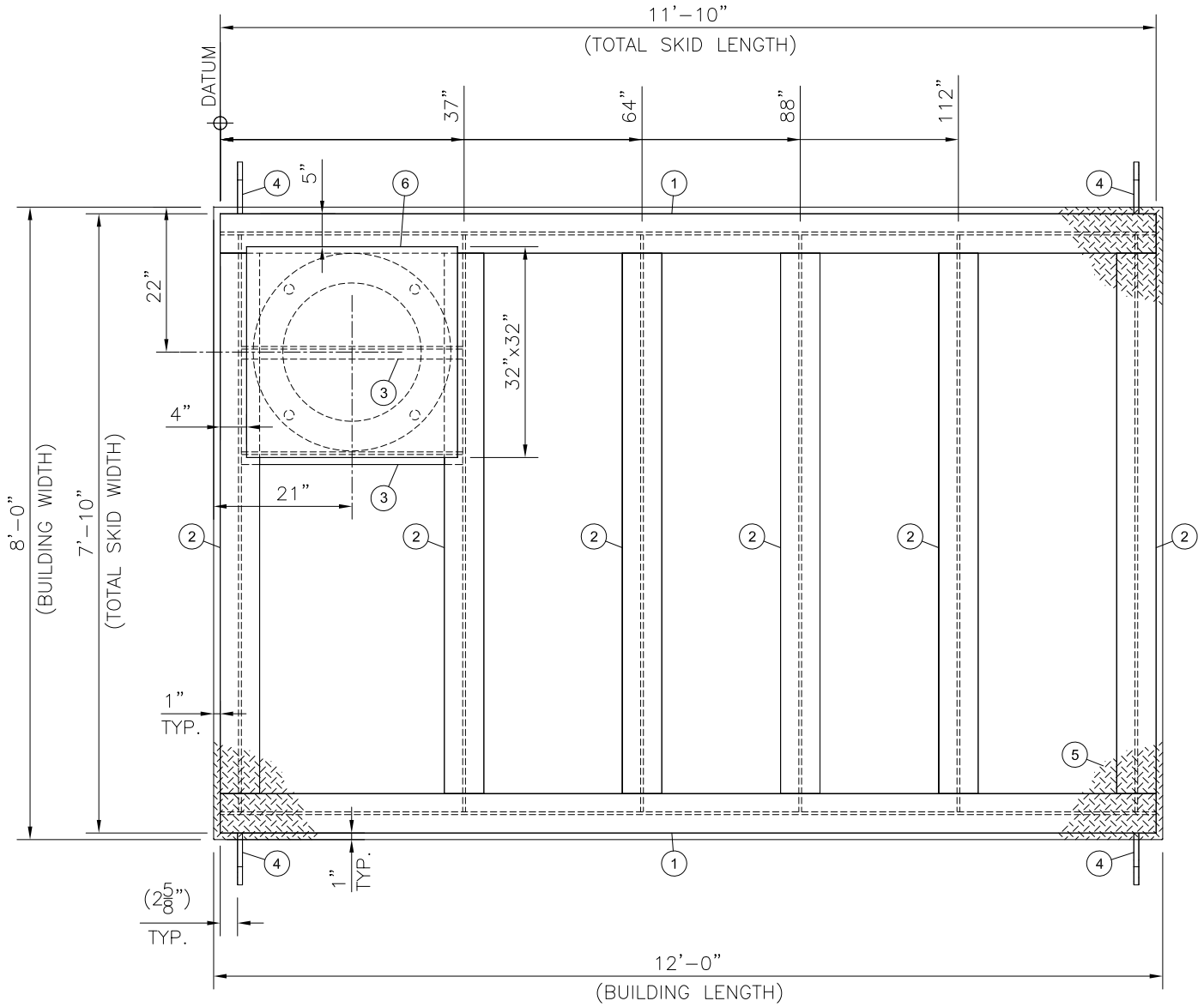

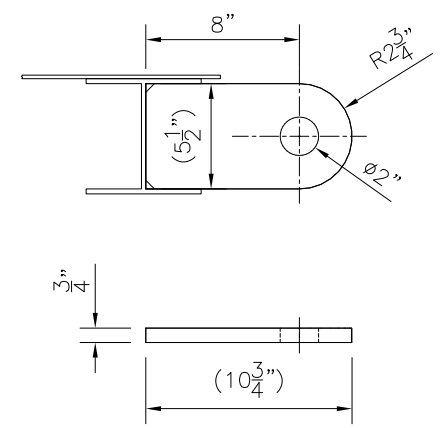

EAR PLATE ITEM 4 DETAIL
1:10

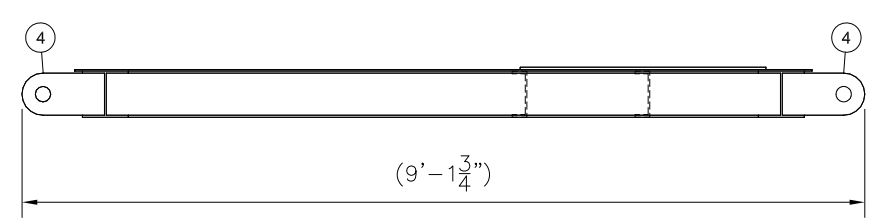

NOTES:
1) ALL SHARP EDGES MUST BE DEBURRED AND/OR ROUNDED.
2) DIMENSIONS MAY VARY ±1/8".
3) ALL STEEL SPECIFICATION MINIMUM SA-36 / 44W.
4) VESSEL BASE PLATE (#6) IS WELDED DIRECTLY TO MAIN MEMBERS.
5) 2" POLYURETHANE SPRAY FOAM ON UNDERSIDE OF SKID.
6) DIMENSIONS OF BASE PLATE (#6) ARE GIVEN FROM EDGE OF MAIN MEMBERS.

REV	REVISION	BY	APPR	d/m/y
0	ISSUED FOR CONSTRUCTION	EYC		07/03/14

DATE 07/03/14	CLIENT PLATINUM ENERGY SERVICES LSD:		
DESIGNED BY M.E.W.			
DRAWN BY E.Y.C.	TITLE STRUCTURAL STEEL LAYOUT 24"x7'-6" S/S 1440psi-2 PHASE VERT. AB SOUR SERVICE SEPARATOR PACKAGE		
CHECKED BY			
APPROVED BY	JOB #: EV-14045	REF. NO.: SKID	DRAWING: SKID LAYOUT
SCALE 1:25	SHEET NO. 1 OF 1	DRAWING NO. EV-14045-S-001	REV. NO. 0