THE INFORMATION CONTAINED HEREIN IS THE CONFIDENTIAL PROPERTY OF TOROMONT PROCESS SYSTEMS AND IS NOT FOR PUBLICATION, AND NO PART THEREOF SHALL BE COPIED OR COMMUNICATED TO A THIRD PARTY WITHOUT AUTHORIZATION FROM TOROMONT PROCESS SYSTEMS.

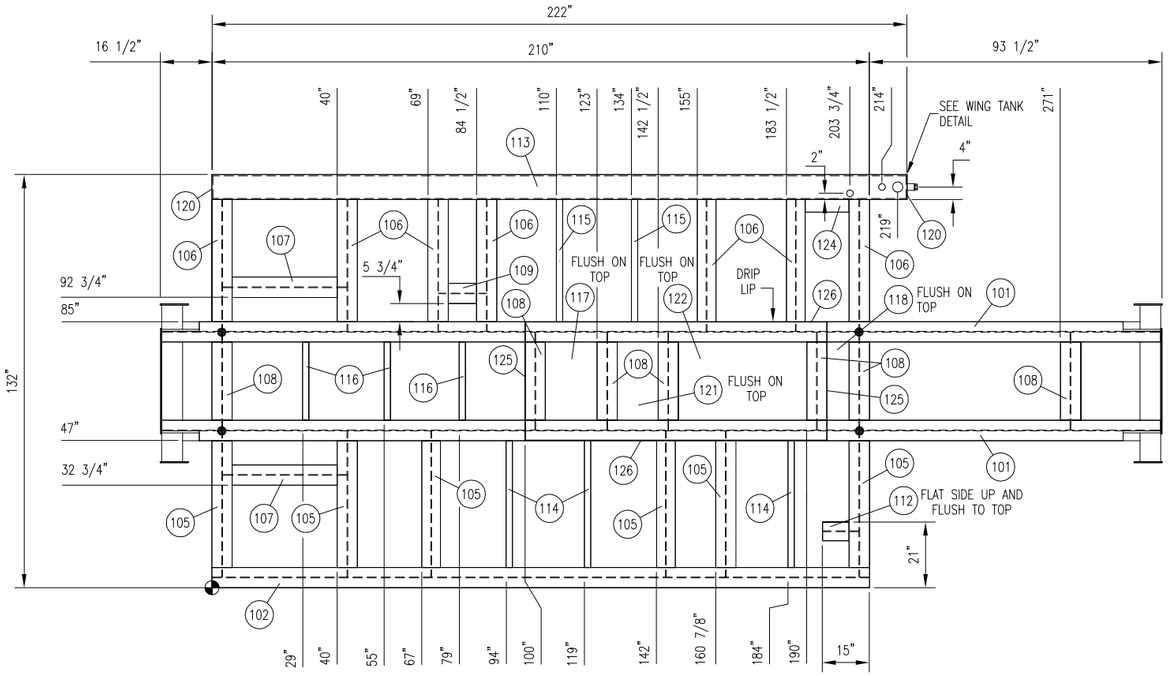

PLAN VIEW

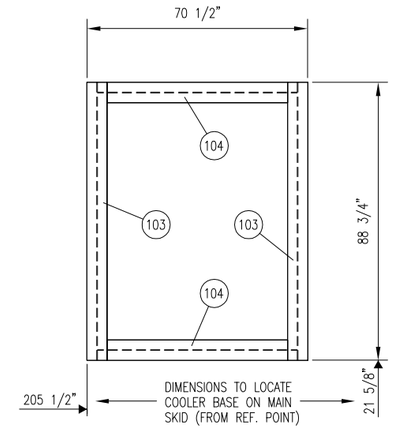

COOLER SUPPORT BASE

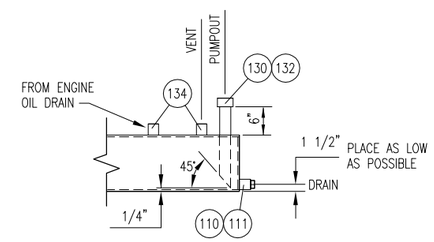

WING TANK DETAIL

SCALE: 3/4" = 1'-0"

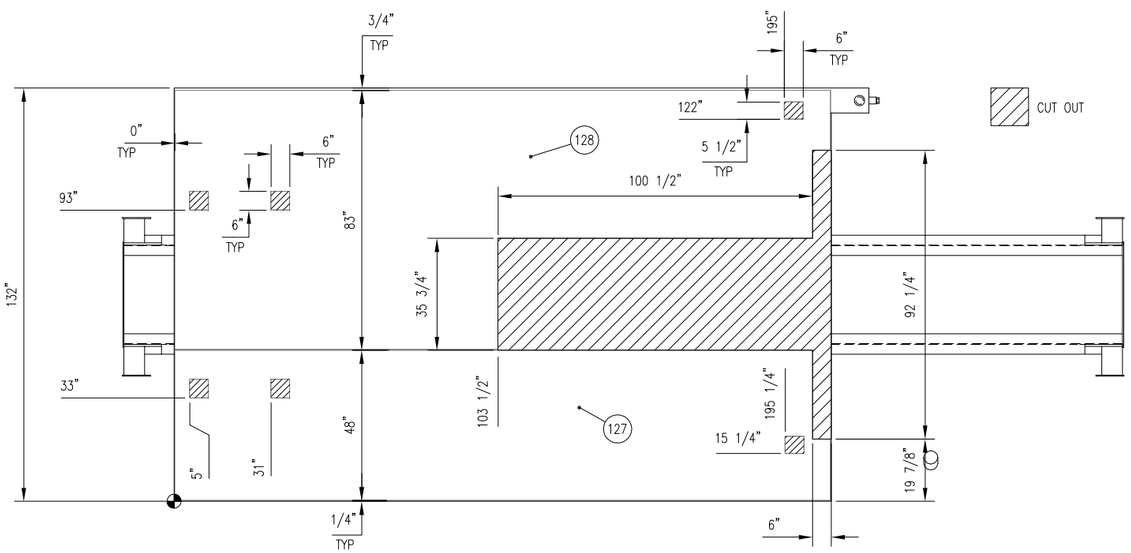

CHECKER PLATE DETAIL

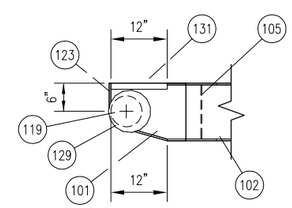

SHOP NOTE:
SHOP TO BEAD WELD JOB NUMBER ON TO FACE OF ITEM 123

DRAG BAR DETAIL

SCALE: 3/4" = 1'-0"

BILL OF MATERIAL

ITEM	QTY	DESCRIPTION	MATERIAL
101	2	W 12 X 26 X 319" LG.	G40.2150W
102	1	W 12 X 26 X 210" LG.	G40.2150W
103	2	W 12 X 26 X 88 3/4" LG.	G40.2150W
104	2	W 12 X 26 X 63 3/4" LG.	G40.2150W
105	6	W 12 X 26 X 46 3/4" LG.	G40.2150W
106	7	W 12 X 26 X 42 1/8" LG.	G40.2150W
107	2	W 12 X 26 X 39 3/4" LG.	G40.2150W
108	7	W 12 X 26 X 31 1/4" LG.	G40.2150W
109	1	W 12 X 26 X 15 1/4" LG.	G40.2150W
110	1	PLUG: 1"-3000# HEX NPT	SA-105
111	3	COUPLING: 1"-3000# NPT	SA-105
112	1	W 6 X 15 X 11 5/8"	G40.2150W
113	1	H.S.S.: 8" X 12" X 3/8" X 222" LG	G40.21350W
114	3	H.S.S.: 2" X 2" X 1/4" X 46 3/4" LG.	G40.21350W
115	2	H.S.S.: 2" X 2" X 1/4" X 42 1/8" LG.	G40.21350W
116	3	H.S.S.: 2" X 2" X 1/4" X 31 1/4" LG.	G40.21350W
117	1	PLATE: 1/2" THK X 16 1/2" X 25" LG	G40.2144W
118	1	PLATE: 3/8" THK X 7" X 25" LG.	G40.2144W
119	4	PLATE: 3/8" THK X 9" DIA.	G40.2144W
120	2	PLATE: 1/4" THK X 7 1/4" X 11 1/4" LG.	G40.2144W
121	1	PLATE: 3/16" THK 13" X 25" LG.	G40.2144W
122	1	PLATE: 3/16" THK X 25" X 41" LG.	G40.2144W
123	2	FLAT BAR: 6" X 3/8" THK X 33 3/4" LG.	G40.2144W
124	1	FLAT BAR: 4" X 3/8" THK X 14" LG.	G40.2144W
125	2	FLAT BAR: 2" X 1/8" THK X 37 3/4" LG.	G40.2144W
126	2	FLAT BAR: 2" X 1/8" THK X 96 1/2" LG.	G40.2144W
127	1	CHECKER PLATE: 3/16" THK 47 1/4" X 210" LG	SA-36
128	1	CHECKER PLATE: 3/16" THK 83 1/2" X 210" LG	SA-36
129	2	PIPE: 6" NOM SCH STD WT X 50" LG.	SA-106-B
130	1	PIPE: 2" NOM SCH STD WT X 20" LG. (CTS)	SA-106-B
131	2	PIPE: 1" NOM SCH 40 X 12" LG. (CUT IN HALF)	SA-106-B
132	1	PIPE CAP: 2"-3000# NPT	SA-234-WPB

GENERAL NOTES:

1. ⊕ ALL TAIL DIMENSIONS FROM REFERENCE POINT.
2. WEIGHT OF SKID STEEL BASE: 7450 LBS
   WEIGHT OF RAISED BASE: 745 LBS
   TOTAL WEIGHT: 8195 LBS
3. COPE FLANGES WHERE REQUIRED.
4. ALL WELDS TO BE 1/4" FILLETS ALL AROUND, UNLESS OTHERWISE NOTED.
5. ALL CUT LENGTHS ARE EXACT TOL +0.0"/-0.125" (+0 MM/-3 MM)
6. ALL BOLT HOLES ARE 3/4"ø(19 MMø) UNLESS OTHERWISE NOTED.
7. SURFACE PREP: SANDBLAST TO SSPC-SP6.
   PRIMER: ONE COAT PRI-1 RED OXIDE
   PAINT: ONE COAT FIN-1
8. ● FULL PENETRATION STRENGTH WELD IS REQ'D AT THESE LOCATIONS.
9. PERIMETER AND ALL PANEL JOINTS OF CHECKER PLATE ARE TO BE SEAL WELDED. SKID MEMBERS TO UNDERSIDE OF CHECKER PLATE TO BE STITCH WELDED AT 2"(50 MM) OF FILLET ON 16"(406 MM) CENTERS.

FOR JOBS 11516 TO 11525

ISSUED FOR CONSTRUCTION

FULL PENETRATION WELD

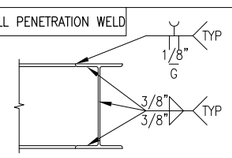

NOTES:

1. FULL PENETRATION WELD ON FLANGE.
2. BACK GOUGE TO SOUND METAL AFTER WELDING SQUARE WELD

REV.	DESCRIPTION	DATE	BY	APPR.
A	ISSUED FOR INFORMATION	JUN 11/04	GWS	

PERMIT TO PRACTICE STAMP

ENGINEER STAMP

TOROMONT / TOROMONT PROCESS SYSTEMS

DRAWN BY: STOCK	DATE: JUN 11/04
CHKD. BY: STOCK	SCALE: 1/2" = 1'-0"
APPR. BY: STOCK	W.O. No: 11516301
CUST. PO No:	

TITLE: SKID STEEL

FOR: TOROMONT PROCESS SYSTEMS
200 HP
BOOSTER COMPRESSOR

DWG. No: 11516-301 | SHEET No: 1 OF 5 | REV: A