P-1430
WATER INJECTION PUMP

MYERS APLEX MODEL: MA 40M TRIPLEX RECIPROCATING PLUNGER PUMP
SUCTION: 1 1/2" NPT, FRONT/SIDE
DISCHARGE: 2 1/2" NPT FRONT ONLY
CAST NICKEL ALUMINUM BRONZE FLUID END
1.375" ø ROKIDE "C" PLUNGERS
GLAND ADJUSTED 838 PACKING, SS DISC/SS SEAT VALVE
FLOW RATE 19.5 USGPM

DRIVER:
30 HP, 1760 RPM, TECO MOTOR, 286 FRAME
460V, 3 PHASE, 60 HZ
CLASS 1 ZONE 1 XP

PSV-1430 Safety
PRESSURE SAFETY VALVE PSV

FARRIS MODEL 26DA15L-120
1.5" 1500 LB. R.F. INLET
2" 300 LB. R.F. OUTLET
316 SST BASE, DISC, DISC INSERT, CS CYLINDER
SST SPRING
COMPLIES TO NACE MR-01-75 IN PRIMARY ZONE
2031 PSIG (14003 KPag) SET PRESSURE

SD-1430
SUCTION DAMPENER

COORS TEK MODEL U-1503-F
100 CUBIC INCH CAPACITY
3 INCH 150 LB. R.F. CONNECTION
BUNA CARTRIDGE FOR WATER SERVICE
SCOTCHKOTE 134 INTERNALS
150 PSIG MAXP.
ALBERTA CRN

PD-1430
DISCHARGE DAMPENER

COORS TEK MODEL C35402-F
35 CUBIC INCH CAPACITY
2 INCH 1500 LB. R.F. CONNECTION
BUNA CARTRIDGE WITH
SCOTCHKOTE 134 INTERNALS
3540 PSIG MAXP.
ALBERTA CRN

FQI-1430
TURBINE METER PACKING

MODEL TBA
1" MNPT END CONNECTIONS
(FREE ISSUE ITEM)

UH-1830
THERMAL TECHNOLOGY MODEL
RUFFNECK MODEL FXS-480360-150 ELECTRIC HEATER

15 KW 480V/3PH/60HZ RATING
FIELD CONTRACTOR WILL SUPPLY
THERMOSTAT WITH BUILDING ELECTRICAL WIRING

EF-1840 STORM
EXHAUST FAN

C/W STORM HOOD
120V/1 PH/60 HZ
12" EXPLOSION PROOF
SIZED FOR 12 AIR CHANGES PER HOUR

Project :	11848	PO:	P-004
Tag:		VP:	
		Rev:	1
Received:	July 2, 2010		

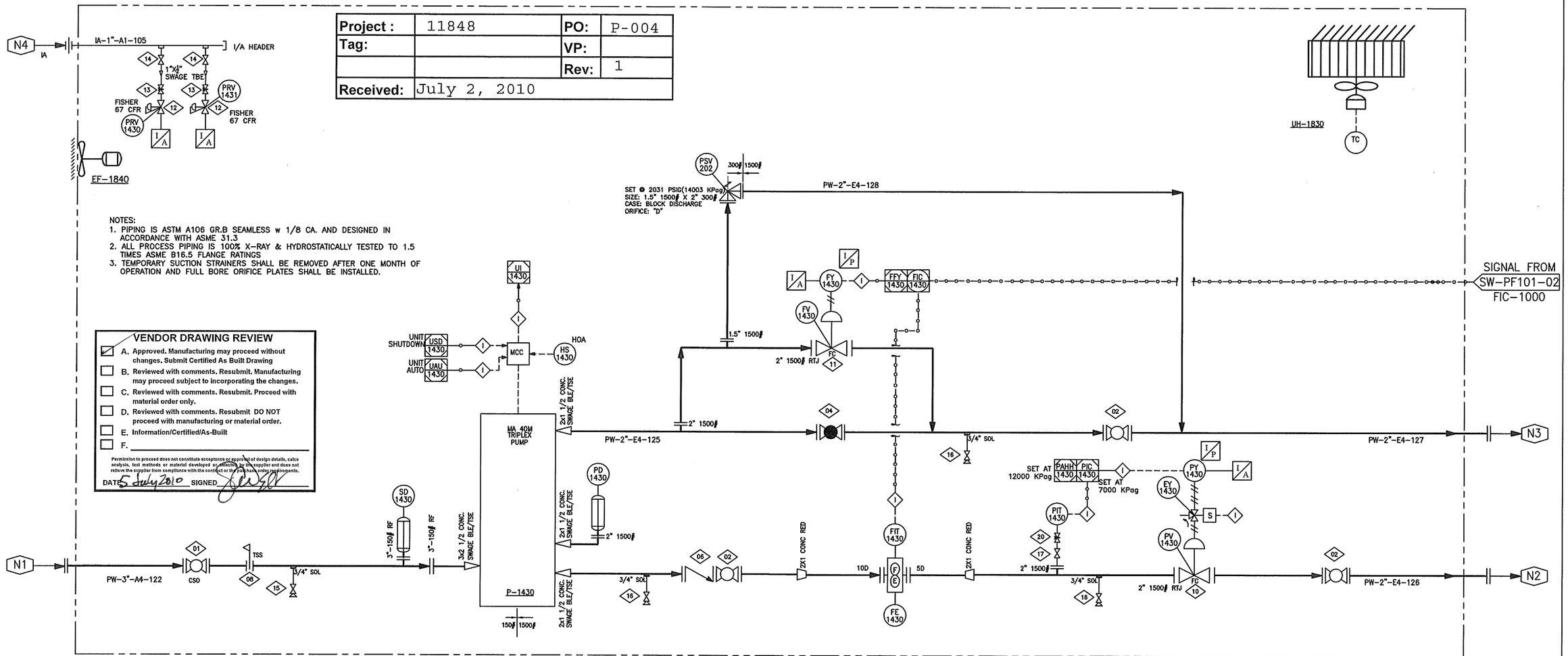

NOTES:
1. PIPING IS ASTM A106 GR.B SEAMLESS w 1/8 CA. AND DESIGNED IN ACCORDANCE WITH ASME 31.3
2. ALL PROCESS PIPING IS 100% X-RAY & HYDROSTATICALLY TESTED TO 1.5 TIMES ASME B16.5 FLANGE RATINGS
3. TEMPORARY SUCTION STRAINERS SHALL BE REMOVED AFTER ONE MONTH OF OPERATION AND FULL BORE ORIFICE PLATES SHALL BE INSTALLED.

VENDOR DRAWING REVIEW

- [x] A. Approved. Manufacturing may proceed without changes. Submit Certified As Built Drawing
- [ ] B. Reviewed with comments. Resubmit. Manufacturing may proceed subject to incorporating the changes.
- [ ] C. Reviewed with comments. Resubmit. Proceed with material order only.
- [ ] D. Reviewed with comments. Resubmit DO NOT proceed with manufacturing or material order.
- [ ] E. Information/Certified/As-Built
- [ ] F. _____

Permission to proceed does not constitute acceptance or approval of design details, calcs analysis, test methods or material developed or selected by the supplier and does not relieve the supplier from compliance with the contract or the purchase order requirements.

DATE 5 July 2010 SIGNED _____

UNIT CONNECTIONS / OPENINGS

MK	FUNCTION	SIZE & TYPE	MK	FUNCTION	SIZE & TYPE
N1	PROCESS INLET	3" 150# RFWN	N2	PROCESS OUTLET	2" 1500# RFWN
N3	PROCESS BYPASS	2" 1500# RFWN	N4	INSTRUMENT AIR	1" 3000# NPT

REV	DESCRIPTION	DATE	DWN	CHK
1	ISSUED FOR CONSTRUCTION	JUNE/28/10	HW	RP
0	ISSUED FOR APPROVAL	JUNE/11/10	HW	RP

westpower equipment ltd.
CALGARY, ALBERTA

ABSA AUTHORIZATION NO. AQP 21428
APEGGA PERMIT TO PRACTICE# P-7612

CUSTOMER: SWAN HILLS SYNFUELS LP			CUSTOMER P.O.# 11848-P-004
LOCATION: SWAN HILLS		CONSULTANT: DPH FOCUS	
DRAWN: HW	DATE: JUNE/11/10	TITLE: PROCESS PIPING & INSTRUMENTATION DIAGRAM –	
CHECKED: RP	DATE: JUNE/11/10		
SHEET: 1/2	SCALE: NTS	DWG.#-LAYOUT NAME: P1206-P&ID	REV# 1