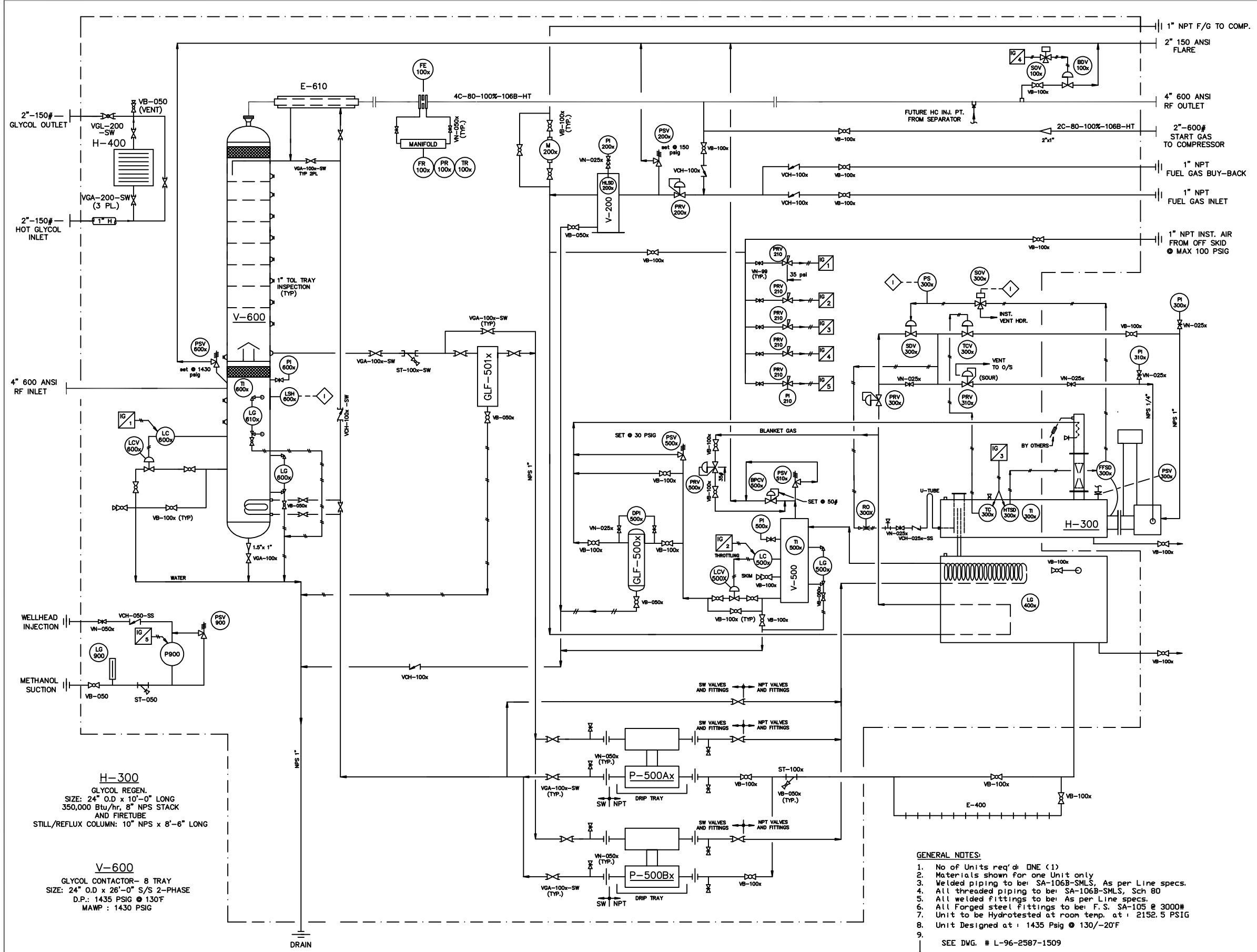

H-300

GLYCOL REGEN.
SIZE: 24" O.D x 10'-0" LONG
350,000 Btu/hr, 8" NPS STACK
AND FIRETUBE
STILL/REFLUX COLUMN: 10" NPS x 8'-6" LONG

V-600

GLYCOL CONTACTOR- 8 TRAY
SIZE: 24" O.D x 26'-0" S/S 2-PHASE
D.P.: 1435 PSIG @ 130'F
MAWP : 1430 PSIG

V-200

SCRUBBER
SIZE: 10.75" O.D x 5'-0" LONG
D.P.: 150 PSIG @ 150'F
C.A. = 0.0625"

E-610

GAS / GLYCOL EXCHANGER
NPS 5" OUTER PIPE X NPS 4" INNER PIPE
D.P.: 1435 PSIG (DIFF. PRESSURE: 700 PSIG)

P-500Ax/P-500Bx

GLYCOL PUMP
Kimray

E-400

AIR / GLYCOL EXCHANGER
SIZE: 1" x 10'-0"

V-500

FLASH VESSEL
SIZE: 12.75" O.D x 5'-0" LONG
D.P.: 150 PSIG @ 150'F
C.A.= 0.0625"

GENERAL NOTES:

1. No of Units req'd: ONE (1)
2. Materials shown for one Unit only
3. Welded piping to be: SA-106B-SMLS, As per Line specs.
4. All threaded piping to be: SA-106B-SMLS, Sch 80
5. All welded fittings to be: As per Line specs.
6. All Forged steel fittings to be: F.S. SA-105 @ 3000#
7. Unit to be Hydrotested at room temp. at : 2152.5 PSIG
8. Unit Designed at : 1435 Psig @ 130/-20'F
9.

SEE DWG. # L-96-2587-1509

19. Instruments using instrument air to vent indoors. Instruments using sour instrument gas (I/G) to vent outdoors (excluding diaphragms & regulator bonnets).
20. Tubing Details:
    Instrument & L.P. Drain Side - 3/8" SS tubing c/w cadmium plated CS Swagelok, SS ferrules on all tubing.
    Process Side - SS tubing c/w SS Swagelok fittings

TAG	QTY	BRAND	DESCRIPTION
BDV-100X	1	Norriseal	Blow down motor valve, 1" NPT Model 2275, 1/2" port,3-15# FAIL OPEN. (NACE Process Trim / Instrument Air)
BPCV-500X	1	Kimray	1" NPT back pressure control valve, model 130-SGT-BP (DI body), 30 - 100# set spring (Sour Process Trim)
DPI-500X	1	OrangeRsrc	Diff. pressure Indicator, 0-50# psig (NACE Process Trim)
FA-300X	1	Enardo	Flame arrestor c/w Eclipse burners, 350,000 btu/hr 8" FireTube. (Sour Process Trim)
FE-100X	1	NorthStar	SENIOR Type Mtr. Run, NPS 4" Sch. 80, 600 ANSI, built to AGA 3C / ANSI B31.3 specs, Beta 0.7, c/w Seal ring & 1 orifice plate, 100% radiography, 1" & 3/4" 3000# FS connections, Data report. (NACE Process Trim)
FFSD-300X	1	Kimray	Flame Failure shut down,HT12PG (Sour Instrument Trim)
FR-100X	1	PMC	3 Pen Recorder c/w 24 hour/7 day clock, (0-1500#) Static, (0-100" WC) Differential, (0-150 deg.F) Temperature Range (NACE Process Trim)
GLF-500X	1	Dpsco	Glycol Filter Housing Model 6-1-336C10-SX, NPS 6" x 44" Lg c/w 10 micron Particulate filtersation element. (Sour Process Trim)
GLF-501X	1	Nowata	HP glycol filter, 1" NPT Model 1-U1 (SS body) c/w elemnt (NACE Process Trim)
H-400	1	Ruffneck	35,000 Btu/Hr Glycol exchange heater c/w 120v. XP motor, thermostat, rated @ 220 Deg. F inlet, 40 deg. F Delta T, glycol flow rate of _____ USGPM.
HLSD-200X	1	Wellmark	Fuel Gas High Level Shut Down, Model FGS-V2 (NACE Process Trim)
HTSD-300X	1	Kimray	Temp. controller, HT-12 Base assembly c/w 3/4" NPT x 12" Lg c/w SS TW. (Sour Process Trim / Sour Instrument Gas)
LC-500X	1	Fisher	Level Controller, 2" NPT Model 2680, 0-30# THROTTLING & Direct Acting signal,1500# MWP. (NACE Process Trim / Instrument Air)
LC-600X	1	Fisher	Level Controller, 2" NPT Model 2680, 0-30# Snap & Direct Acting signal,1500# MWP. (NACE Process Trim / Instrument Air)
LCV-500X	1	Norriseal	Dump Valve, 1" NPT Model 2275, 1/2" port,0-15# Fail Close signal. (NACE Process Trim / Instrument Air)
LCV-600X	1	Norriseal	Dump Valve, 1" NPT Model 2275, 1/4" port,0-15# Fail Close signal. (NACE Process Trim / Instrument Air)
LG-400X	1	Jerguson	Tubular sight glass c/w cocks (Glass gauge) #170 (NACE Process Trim)
LG-500X LG-600X	2	Jerguson	Transparent Sight Glass,Model 15T20 (c/w cocks), 1500# MWP (NACE Process Trim)
LG-610X	1	Jerguson	Reflex Sight Glass Model 15R20 (c/w cocks) ,1500# MWP (NACE Process Trim)
LG-900	1	Kenco	Model 5700-S2 CVRH gauge c/w test valve
LSH-600X	1	SDR	High Level Switch, 2" NPT Model 1510C-C2A-C-W9-ES, 24v. XP (NACE Process Trim)
M-200X	1	------	Gas flow meter, 1 1/2" NPT, cu.m. readout
MFD-100X	1	Century	5-Valve CS Manifold (NACE Process Trim)
P-500AX P-500BX	1	Kimray	Kimray Model 9015 PV Pump (NACE Process Trim)
P-900	1	Texsteam	5103LP methanol injection pump
PI-200X	1	Wika	Pressure Indicator,1/4" NPT x 2.5" Liq. filled,dual Scale (0-200 psig) SS dial. (NACE Process Trim)
PI-210	1	Wika	1/4" Backmount PI, 0-60# dual scale, dry
PI-300X PI-310X	2	Wika	Pressure Indicator,1/4" NPT x 2.5" Liq.filled,dual Scale (0-30 psig) SS dial. (Sour Process Trim)
PI-500X	1	Wika	Pressure Indicator,1/2" NPT x 4" Liquid filled,dual Scale (0-200 psig) SS dial. (NACE Process Trim)
PI-600X	1	Wika	Pressure Indicator,1/2" NPT x 4" Liquid filled,dual Scale (0-1500 psig) SS dial. (NACE Process Trim)
PRV-200X	1	Fisher	Regulator 1" NPT Model 627 Stl. Body c/w 100 psig set spring, 1/4" port NYLON trim. (NACE Process Trim)
PRV-210	5	Fisher	Regulator 1/4" NPT Model 67AFR, 35# Set Spring. (Air Process Trim)
PRV-300X	1	Fisher	Regulator,1" npt Model 627 (MI body) 5-15# spring (Sour Process Trim)
PRV-310X	1	Fisher	Regulator, Fisher 67AFR,1/4" npt (Sour Process Trim)
PRV-500X	1	Fisher	Regulator 1" NPT Model 627 Stl. Body c/w 35 psig set spring, 3/8" port. (NACE Process Trim)
PS-300X	1	CCS Dual-S	SOUR service XP electrical Pressure switch, 24 volt, set @ 10 psig falling model 6900-G2E, (SPDT). (Sour Instrument Trim)
PSV-200X	1	Mercer	Relief Valve, 1" x 1" NPT 9100-WCB, D Orifice, Set @ 150# (NACE Process Trim)
PSV-300X	1	Deico	2" Cone check relief valve (Nace Process Trim)
PSV-500X	1	Mercer	Threaded Relief Valve, 1" NPT x 1" NPT Model 9100-WCB, D Orifice, set @ 145 psig. (NACE Process Trim)
PSV-500X	1	Mercer	Threaded relief valve,model 9100 1" x 1" set @ 30# (NACE Process Trim)
PSV-600X	1	Mercer	Threaded Relief Valve, 1" NPT x 1.5" NPT Model 9100-WCB, F Orifice set @ 1430 psig (NACE Process Trim)
PSV-900	1	Nupro	SS-4R3A5 (EP O-RING) set @ 1440 psig
RO-300X	1	Amot	Restrictor Orifice model 2789-B (Sour Instrument Trim)
SDV-300X	1	Kimray	1" npt Model 130-SMT-DAB, DI body. (Sour Process Trim / Instrument Air)
SDV-100X SDV-300X		Honeywell	SOUR service XP electrical solenoid valve, 24 Volts , 100 psig MWP. (Sour Instrument Trim)
ST-050	1	Mueller	Threaded strainer, 1/2" npt CI body
ST-100X	1	Mueller	Threaded strainer, 1" npt CS body # 581 (NACE Process Trim)
ST-100X-SW	1	Mueller	SW Strainer , 1" NPS 1500# MWP # 581 (NACE Process Trim)
TC-300X	1	Kimray	Temp. controller, HT-12 Base assembly c/w 3/4" NPT x 12" Lg SS TW. (Sour Process Trim / Instrument Air)
TCV-300X	1	Kimray	1" npt Model 130-SMT-DAB, DI body. (Sour Process Trim / Sour Instrument Gas)
TI-300X	1	Trend	Temperature Indicator, 1/2" x 3" dual scale (-50..+250 deg C) c/w 3/4" NPT x 6" Lg SS Thermowell. (NACE Process Trim)
TI-500X TI-600X	2	Trend	Temperature Indicator, 1/2" x 3" dual scale (-40..+70 deg C) c/w 3/4" NPT x _____Lg SS Thermowell. (NACE Process Trim)
VB-050	2	Trueline	1/2" NPT Reg. port ball valve, 2000# WOG (Sour Process Trim)
VB-050X	8	TrueLine	1/2" NPT Reg. port ball valve, 2000# WOG (NACE Process Trim)
VB-100X	27	TrueLine	1" NPT Reg. port ball valve, 2000# WOG (NACE Process Trim)
VB-100X	5	TrueLine	1" NPT Reg. port ball valve, 2000# WOG (Sour Process Trim)
VCH-025x-S	1	Nupro	1/4" NPT SS Check Valve, 1 psig cracking pressure. (Sour Process Trim)
VCH-050-SS	1	Nupro	1/2" NPT SS Check Valve
VCH-100X	2	Alco or Eq	Threaded Check Valve, 1" NPT class 800 (NACE Process Trim)
VCH-100X-SW	1	Alco or Eq	SW check valve, NPS 1" class 800 (NACE Process Trim)
VGA-200-SW	3	Alco or Eq	SW gate valve, NPS 2" class 800 (Nace Process Trim)
VGA-100X	1	Alco or Eq	Threaded gate valve, 1" NPT class 800 (NACE Process Trim)
VGA-100X-SW	16	Alco or Eq	SW gate valve, NPS 1" class 800 (NACE Process Trim)
VGL-200-SW	1	Alco or Eq	SW globe valve, NPS 2" class 800 (Nace Process Trim)
VGL-100X	1	Alco or Eq	Threaded globe valve, 1" NPT class 800 (NACE Process Trim)
VN-025X	3	Century	Needle Valve, 1/4" NPT Model H1C-22 MXF (NACE Process Trim)
VN-025X	5	Century	Needle Valve, 1/4" NPT Model H1VC-22 MXF (Sour Process Trim)
VN-050X	11	Century	Needle Valve, 1/2" NPT Model H7VC-44Q MXF (NACE Process Trim)
VN-050X	2	Century	Needle Valve, 1/2" NPT Model H7VC-44 MXF (NACE Process Trim)
VN-99	5	Agco	Mini Valve Model HSC-2 (Air Process Trim)

QBDHF

OPSCO STANDARD WELDED PIPELINE DESIGNATION SYSTEM

OPTIONAL: LEAVE OUT UNLESS NEEDED

EXAMPLE: 6B - 40 - 10% - 106B - HT - OTHER NDT

LINE SIZE (NPS) — ANSI CLASS: A=150 B=300 C=600 D=900 E=1500 F=2500 — PIPE SCHEDULE — X-RAY — MATERIAL SPEC. — STRESS REL.

THIS DRAWING IS THE PROPERTY OF OPSCO'92 INDUSTRIES LTD. AND LOANED TO THE RECIPIENT FOR HIS CONFIDENTIAL USE ONLY. IN CONSIDERATION OF THE LOAN OF THIS DRAWING, THE RECIPIENT PROMISES AND AGREES THAT IT SHALL NOT BE USED IN ANY WAY DETRIMENTAL TO THE INTEREST OF OPSCO'92 INDUSTRIES LTD., THAT IT SHALL BE RETURNED UPON REQUEST, AND THAT IT SHALL NOT BE REPRODUCED, COPIED, LENT OR OTHERWISE DISPOSED OF DIRECTLY OR INDIRECTLY, NOR USED FOR ANY PURPOSE OTHER THAN THAT INTENDED WITHOUT THE WRITTEN PERMISSION OF OPSCO'92 INDUSTRIES LTD.

No.	DATE	REVISIONS	BY	APP.	No.	DATE	REVISIONS	BY	APP.
0	12.02.96	FOR APPROVAL	DG						
1	12.16.96	REVISED AS PER CUSTOMER M/U, ISSUED FOR CONSTRUCTION	DG						
2	01.13.97	ADDED METHANOL PUMP SYSTEM	DG						
3	02.05.97	ADDED F.G. BUY-BACK SYSTEM CONNECTION	DG						
4	04.07.97	AS BUILT	LV						

ENGINEERS RECORD		DATE
DRAWN BY	DG	DEC. 02,1996
CHECKED BY		
APPD. BY		
ISSUED TO SHOP		

Opsco'92

CLIENT: ENCAL ENERGY c/o CONCISE DESIGN & ENG'G. SVCS.

PROJECT: 24"-600# DEHYDRATION PACKAGE LSD: H-7-F, b-12-F

TITLE: FLOW DIAGRAM

Scale	JOB No.	DWG. No.	REV.
NTS	JM-96-2587	F-96-2587-553	4