THE DESIGN IT COVERS ARE CONFIDENTIAL AND THE PROPERTY OF PROPAK SYSTEMS LTD. AND SHALL NOT BE DISCLOSED TO OTHERS OR REPRODUCED IN ANY MANNER OR USED FOR ANY PURPOSE WHATSOEVER EXCEPT BY WRITTEN CONSENT OF PROPAK

V-122
DEETHANIZER
356mm O.D. x 14110mm S/S
2758 kPa @ -28°C/204°C, 1.6mm C.A.
PACKING: 38mm ø CS PALL RINGS

E-104
DEETHANIZER REBOILER
168mm O.D. x 1775mm TS/TS
TS: 2758 kPa @ -28°C/204°C, 1.6mm C.A.
SS: 1379 kPa @ -28°C/204°C, 1.6mm C.A.

AC-103
EXCHANGER INDUSTRIES PRODUCT COOLER
2758 kPa @ 204°C/-40°C, 1.6mm C.A.
COMMON FRAME WITH AC-108

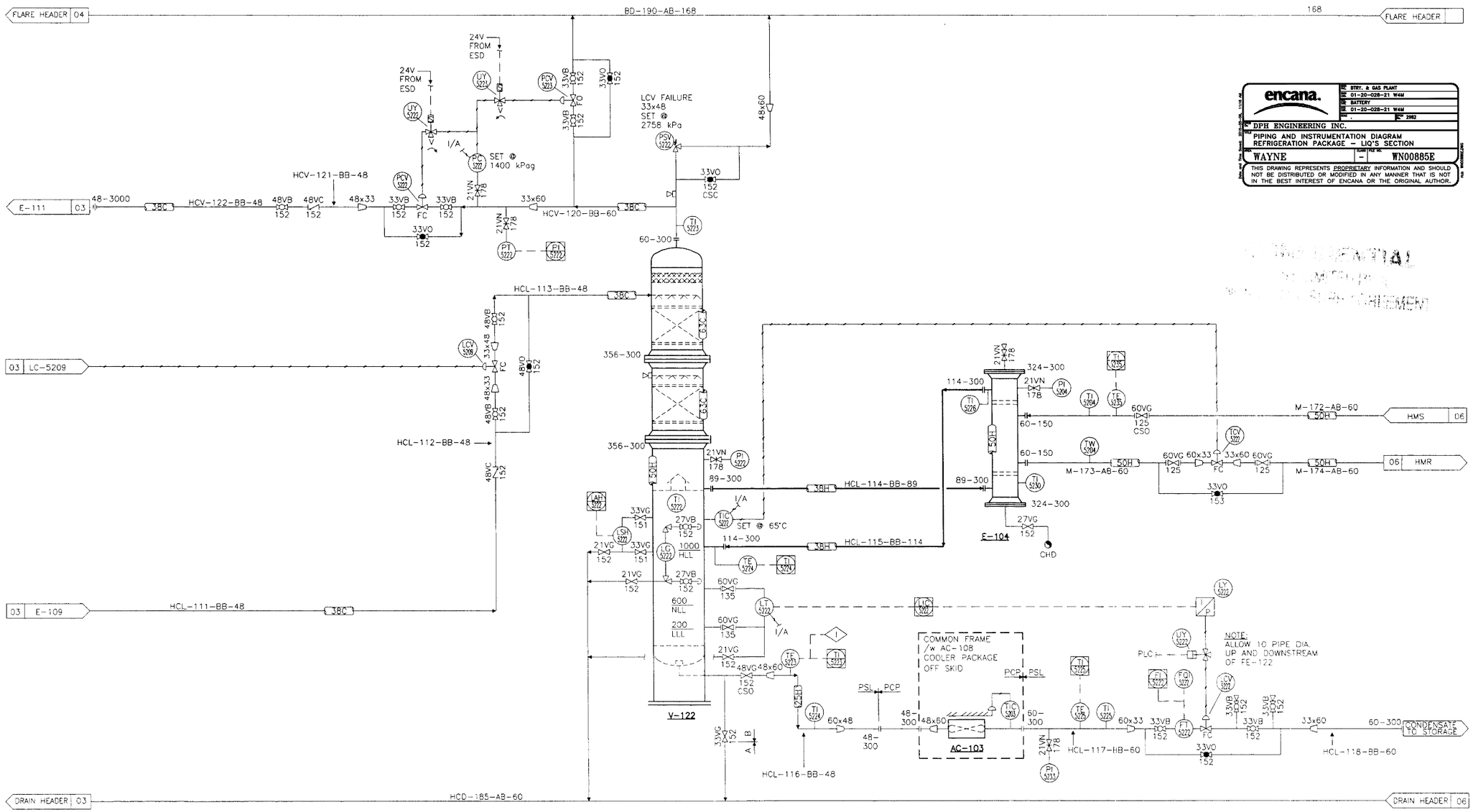

encana.
BTRY. & GAS PLANT
01-20-028-21 W4M
BATTERY
01-20-028-21 W4M
DWG. 2982
DPH ENGINEERING INC.
PIPING AND INSTRUMENTATION DIAGRAM
REFRIGERATION PACKAGE - LIQ'S SECTION
WAYNE | - | WN00885E

THIS DRAWING REPRESENTS PROPRIETARY INFORMATION AND SHOULD NOT BE DISTRIBUTED OR MODIFIED IN ANY MANNER THAT IS NOT IN THE BEST INTEREST OF ENCANA OR THE ORIGINAL AUTHOR.

No.	REVISION	BY	DATE	CKD	ENG
3	AS BUILT DPH# 2982	VK	JAN/95	BB	BB
2	GENERAL REVISIONS	WC	JAN/95	BB	BB
1	ISSUED FOR CONSTRUCTION	RC	NOV/94	BB	BB
C	GENERAL REVISIONS	WC	OCT/94	BB	
B	ISSUED FOR APPROVAL	RC	AUG/94	BB	
A	ISSUED WITH BID	RC	JUN/94	PD	

GENERAL NOTES

1. THIS DRAWING AND

PREPARED BY:
PROPAK SYSTEMS LTD.
ENGINEERING DESIGN FABRICATION CONSTRUCTION
AIRDRIE ALBERTA CANADA

DRAWN	CHECKED	APPROVED	DATE	SCALE
BY: RICHARD C.			AUG. 24/94	

PANCANADIAN PETROLEUM
BATTERY & COMPRESSION FACILITY
REFRIG. PROCESSING PACKAGE-LIQ'S SECTION
MECHANICAL FLOWSHEET

DWG. No.: D- MFS-94139-100 SHT. 5 OF 6 REV 3