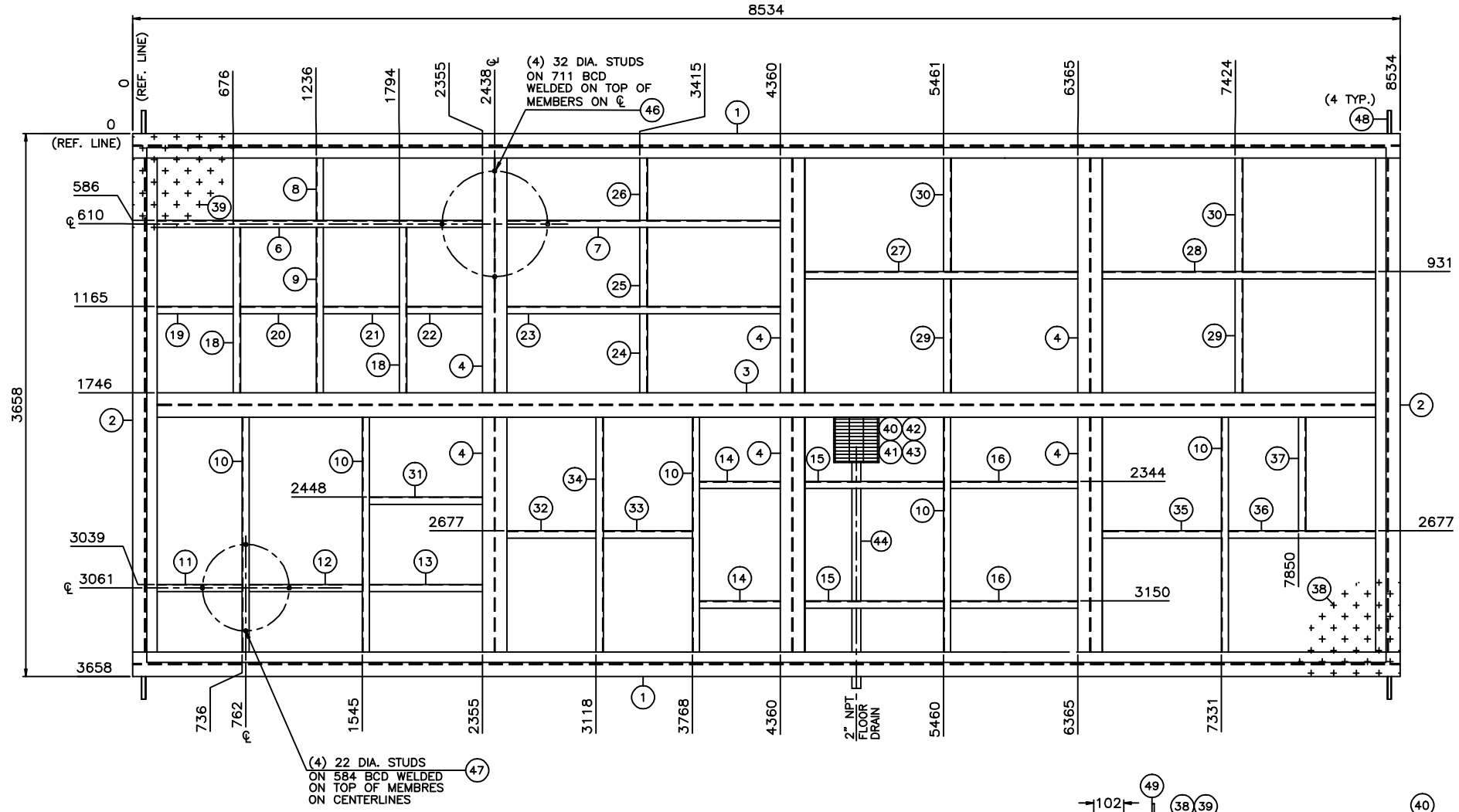

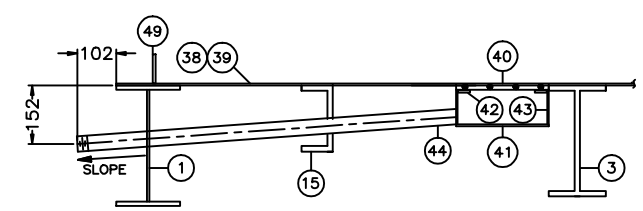

FLOOR DRAIN DETAIL

NOTES:

1. ALL WELDS TO BE 6mm ALL AROUND UNLESS OTHERWISE NOTED.
2. CROSS MEMBERS TO BE COPED TO MAIN MEMBERS AND FULLY WELDED. FULL PEN. WELDS ON FLANGE TO FLANGE JOINTS.
3. CHK'D PLATE SEAMS TO BE 100% FULL SEAL WELDS AND STITCH WELDED TO MAIN MEMBER.
4. UNDERSIDE OF SKID TO BE INSULATED WITH 51mm THK. POLYURETHANE SPAY FOAM.
5. ESTIMATED SHIPPING WT : 8,720 LBS

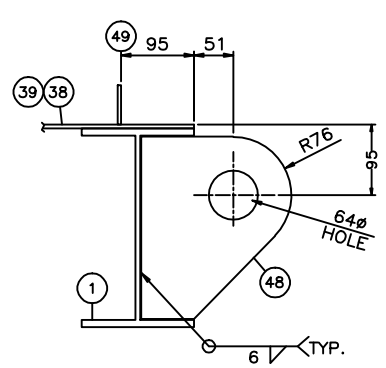

LIFTING LUG

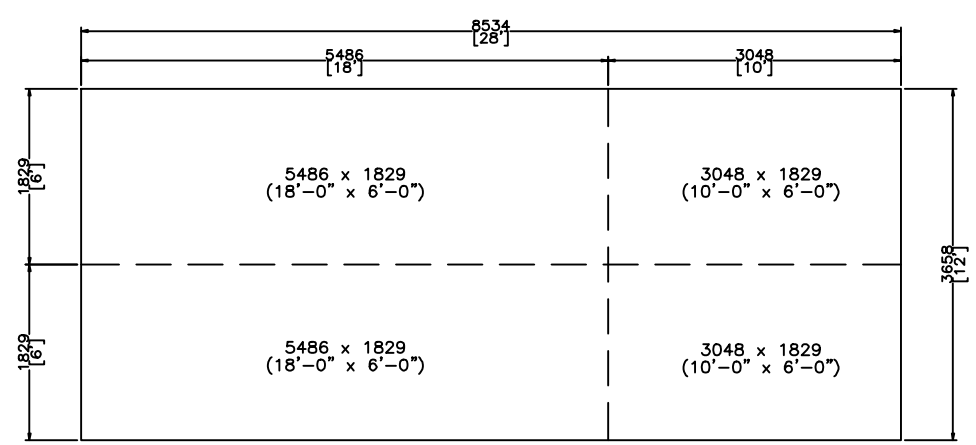

CHECKER PLATE CUTTING DETAIL

BILL OF MATERIALS

TAG NO.	QNTY.	DESCRIPTIONS	MAT'L SPEC.
1	2	W12 x 30# (8534)	40.21-44W
2	2	W12 x 30# (3486)	40.21-44W
3	1	W12 x 30# (8363)	40.21-44W
4	6	W12 x 30# (1740)	40.21-44W
5			40.21-44W
6	1	C6 x 8.2# (2349)	40.21-44W
7	1	C6 x 8.2# (1999)	40.21-44W
8	1	C6 x 8.2# (500)	40.21-44W
9	1	C6 x 8.2# (1235)	40.21-44W
10	5	C6 x 8.2# (1740)	40.21-44W
11	1	C6 x 8.2# (650)	40.21-44W
12	1	C6 x 8.2# (805)	40.21-44W
13	1	C6 x 8.2# (884)	40.21-44W
14	2	C6 x 8.2# (667)	40.21-44W
15	2	C6 x 8.2# (1014)	40.21-44W
16	2	C6 x 8.2# (980)	40.21-44W
17			40.21-44W
18	2	ANGLE- 2" x 2" x 3/16" THK. (1235)	40.21-44W
19	1	ANGLE- 2" x 2" x 3/16" THK. (636)	40.21-44W
20	1	ANGLE- 2" x 2" x 3/16" THK. (510)	40.21-44W
21	1	ANGLE- 2" x 2" x 3/16" THK. (600)	40.21-44W
22	1	ANGLE- 2" x 2" x 3/16" THK. (589)	40.21-44W
23	1	ANGLE- 2" x 2" x 3/16" THK. (1999)	40.21-44W
24	1	ANGLE- 2" x 2" x 3/16" THK. (656)	40.21-44W
25	1	ANGLE- 2" x 2" x 3/16" THK. (574)	40.21-44W
26	1	ANGLE- 2" x 2" x 3/16" THK. (500)	40.21-44W
27	1	ANGLE- 2" x 2" x 3/16" THK. (1999)	40.21-44W
28	1	ANGLE- 2" x 2" x 3/16" THK. (1998)	40.21-44W
29	2	ANGLE- 2" x 2" x 3/16" THK. (890)	40.21-44W
30	2	ANGLE- 2" x 2" x 3/16" THK. (845)	40.21-44W
31	1	ANGLE- 2" x 2" x 3/16" THK. (884)	40.21-44W
32	1	ANGLE- 2" x 2" x 3/16" THK. (724)	40.21-44W
33	1	ANGLE- 2" x 2" x 3/16" THK. (599)	40.21-44W
34	1	ANGLE- 2" x 2" x 3/16" THK. (1740)	40.21-44W
35	1	ANGLE- 2" x 2" x 3/16" THK. (880)	40.21-44W
36	1	ANGLE- 2" x 2" x 3/16" THK. (1113)	40.21-44W
37	1	ANGLE- 2" x 2" x 3/16" THK. (845)	40.21-44W
38	2	3/16" THK. THK CHK'D PLATE (5486 x 1829)	40.21-44W
39	2	3/16" THK. THK CHK'D PLATE (3048 x 1829)	40.21-44W
40	1	1" x 1/8" GRATING (12" x 12" SQ.)	40.21-44W
41	1	12" SCH 40 ERW PIPE x 12" LG (CUT IN HALF)	SA-106B
42	2	1" x 1/4" THK. FLAT BAR x 12" LG	40.21-44W
43	2	1/4" THK. PLATE x 6" x 12" LG	40.21-44W
44	1	DRAIN PIPE - 2" SCH 80 SML'S	SA-106B
45			
46	4	STUDS - 32ø x 85 LG c/w NUTS & WASHERS	GR-5
47	4	STUDS- 22ø x 76 LG c/w NUTS & WASHERS	GR-5
48	4	LIFTING LUG- 25mm THK PLATE	40.21-44W
49	4	DRIP LIP 51 x 6mm THK	40.21-44W

(1) REQ'D

TIME CARD

C-3026-SK

DWG. NO.	REFERENCE DRAWINGS	REV	DESCRIPTION	DATE	BY

RUSHTON GAS & OIL EQUIPMENT LTD

CUSTOMER: NEXEN INC.

LOCATION: b-16-I/94-0-8

c/o TRI OCEAN ENGINEERING LTD.

P.O.# 4500105121

STRUCTURAL SKID

24" OD DEHYDRATION SKID PACKAGE (SOUR)

DATE:	DRN BY:	SCALE:	CHKD BY:	APPRD BY:	DWG NO:	REV:
11/11/08	O.L.	1:20			C-3026-D	0