~~Tricon~~ CO_2 Tank

CENTURY C-1006

A 477154

CRN R0870.2

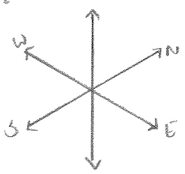

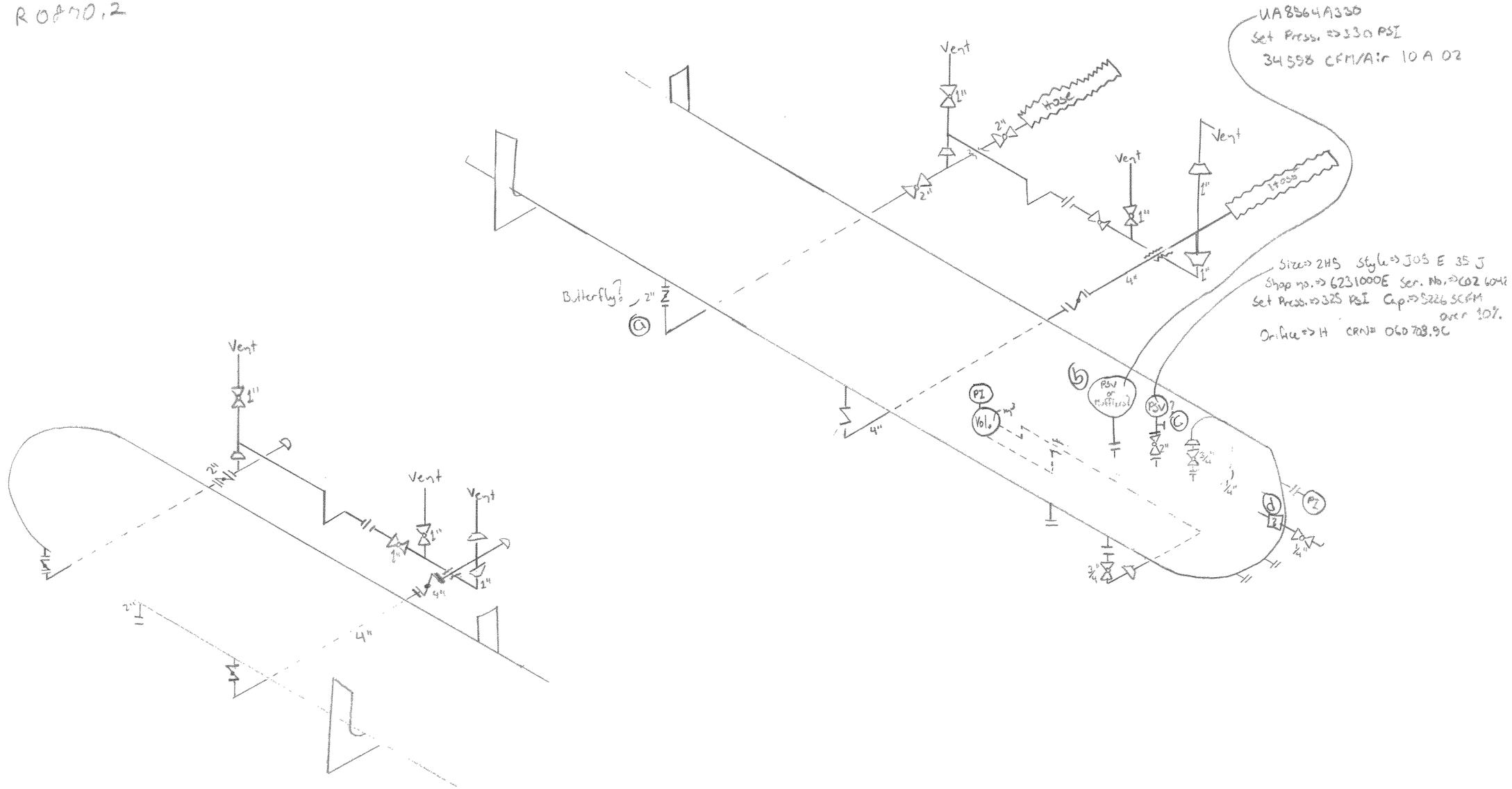

3×?