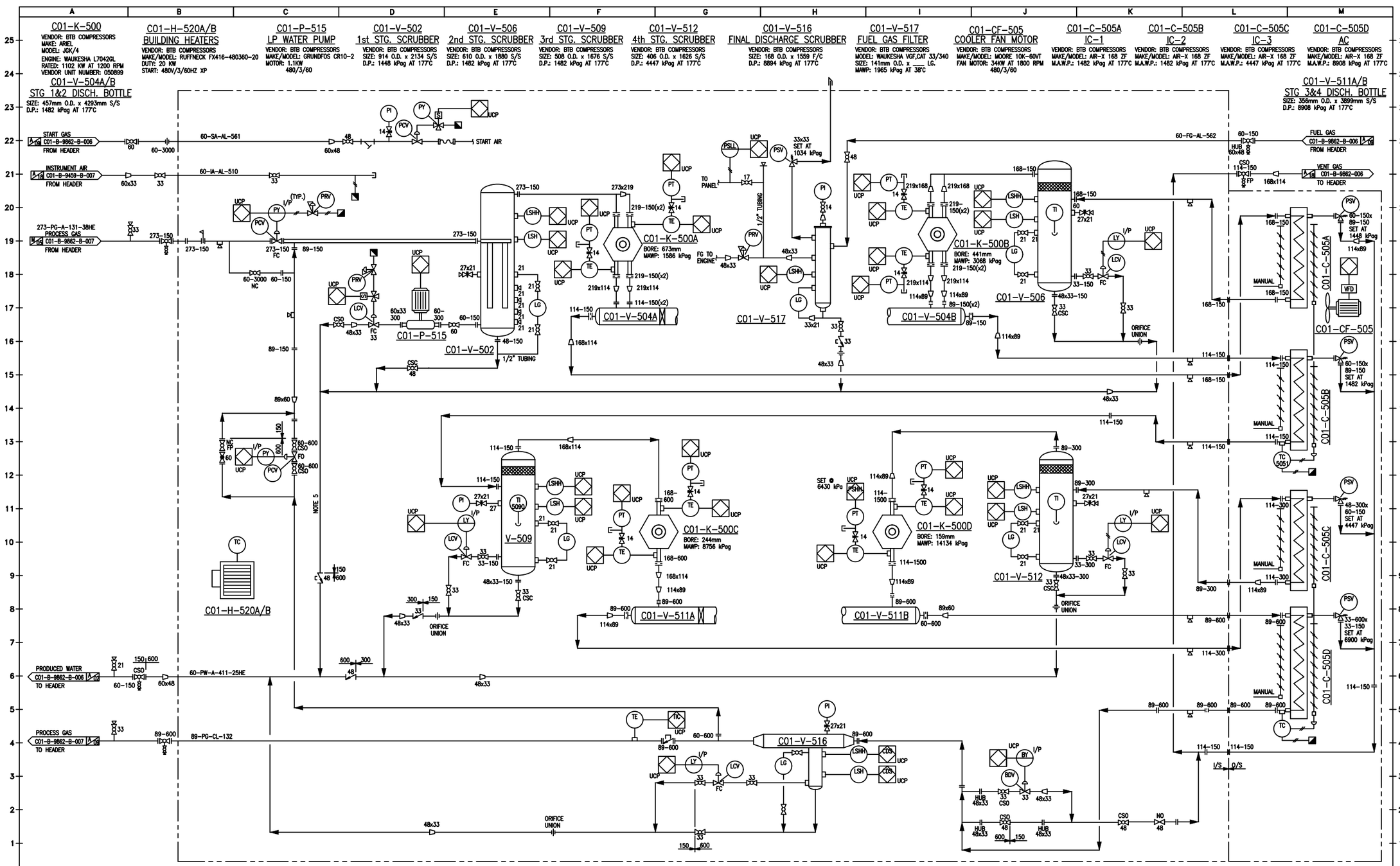

No.	DESCRIPTION	DATE	BY	CHK.	ENG.	REFERENCE DRAWING	DWG. No
A	ISSUED FOR APPROVAL 9K-500 ADDITION)	10/10/08	DP				
0	ISSUED FOR CONSTRUCTION	11/21/08	DP	KAB	DK		
1	AS-BUILT AS PER FIELD MARK-UPS	04/03/09	DP				

NOTES:
1. SEE VENDOR P&ID'S AND BOM FOR COMPLETE PACKAGE DESCRIPTION.
2. PRESSURE INSTRUMENTS ARE EQUIPPED WITH ISOLATION VALVES.
3. PSV'S ARE SIZED BY VENDOR. SEE PSV LIST FOR DETAILS.
4. CURRENT DEVELOPMENT INVOLVES THE ADDITION OF ONE COMPRESSOR PACKAGE TOTAL CAPACITY AT 283x10 m³/d (10 MMSCFD).
5. DO NOT OPERATE DRAIN LINES ABOVE 1482 kPag REGARDLESS OF SPEC BREAKS.
6. FIELD REMOVAL OF SUCTION BLOWDOWN VALVE (NOT SHOWN) TO BE CONFIRMED BY QUICKSILVER INSPECTOR.
7. UCP – UNIT CONTROL PANEL.
8. ENGINEERING STAMP APPLIES TO OFF-SKID PIPING & ON-SKID CLOUDED AREAS.
9. CLOUDED AREAS INDICATE MODIFICATIONS REQUIRED BY ENERFLEX PRIOR TO SHIPMENT.

ENGINEERING STAMP

CHIGWELL
C01-K-500 COMPRESSOR
LSD 02-03-042-25 W4M
P&ID

S:\QRCI\Logo Files\Logo_Large.jpg

DRN.	CHK.	APP'D	DATE	SCALE	PROJECT	DWG. NO.	SHT.	REV
JFL	CD	CD	05/12/11	NTS	9862	A01-B-9862-B-004	– / –	1