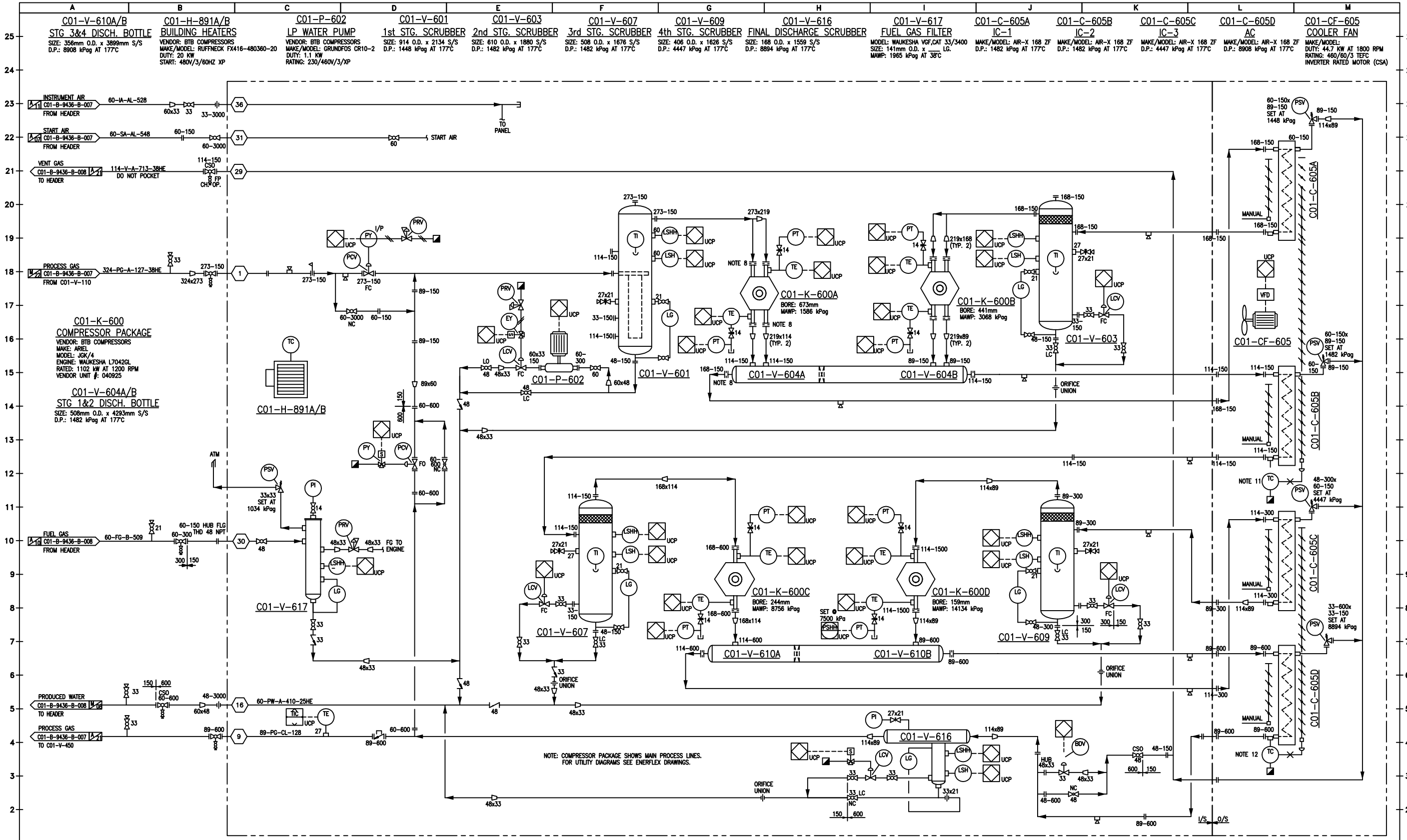

No.	DESCRIPTION	DATE	BY	CHK.	ENG.	REFERENCE DRAWING	DWG. No
5A	ISSUED FOR AS-BUILT	12/11/06	WQS				

NOTES:
1. CONFINED SPACE OPERATING PROCEDURE TO BE UTILIZED DURING VALVE OPERATION.
2. GATHERING SYSTEM MOP TO BE PROTECTED BY UPSTREAM WELLSITE PSV'S AND PIPELINE PSV'S.
5. SEE VENDOR P&ID AND BOM FOR COMPLETE PACKAGE DESCRIPTION.
6. CONTRACTOR TO SUPPLY/INSTALL HIGH POINT VENTS AND LOW POINT DRAINS AS REQUIRED (OFF SKID).
7. PRESSURE INSTRUMENTS ARE EQUIPPED WITH ISOLATION VALVES.
8. PSV'S INSIDE COMP. SKID ARE SIZED BY VENDOR. SEE PSV LIST FOR DETAILS.
9. UCP – UNIT CONTROL PANEL.
10. RESTRICTION ORIFICE DETAIL AS PER VENDOR'S DETAIL DRAWINGS.
11. IC1 & IC2 CONTROLLED BY STAGE 2 DISCHARGE
12. IC3 & AC CONTROLLED BY STAGE 4 DISCHARGE

ENGINEERING STAMP

JOFFRE
C01-K-600 COMPRESSOR
LSD 04-22-039-25W4
P&ID

QUICKSILVER RESOURCES

DRN.	CHK.	APP'D	DATE	SCALE	PROJECT	DWG. NO.	SHT.	REV
JFL	CD	CD	03/18/11	NTS		C01-B-9436-B-005	–	5A