HAZARDOUS LOCATION
CLASS I, DIV. 2, GROUP D

WARNING:
DO NOT CLOSE SERVICE VALVES IN LIQUID REFRIGERANT OR LUBE OIL LINES UNLESS THE ISOLATED PIPING OR EQUIPMENT IS TO BE OPENED IMMEDIATELY FOR SERVICE
DO NOT ISOLATE THE STAND-BY FILTER OF UNITS FURNISHED WITH DUAL FILTERS. AS A MINIMUM THE OUTLET VALVE TO EACH FILTER MUST BE OPEN AT ALL TIMES.
THERMAL EXPANSION OF TRAPPED LIQUID WILL YIELD EXCESSIVE PRESSURE.

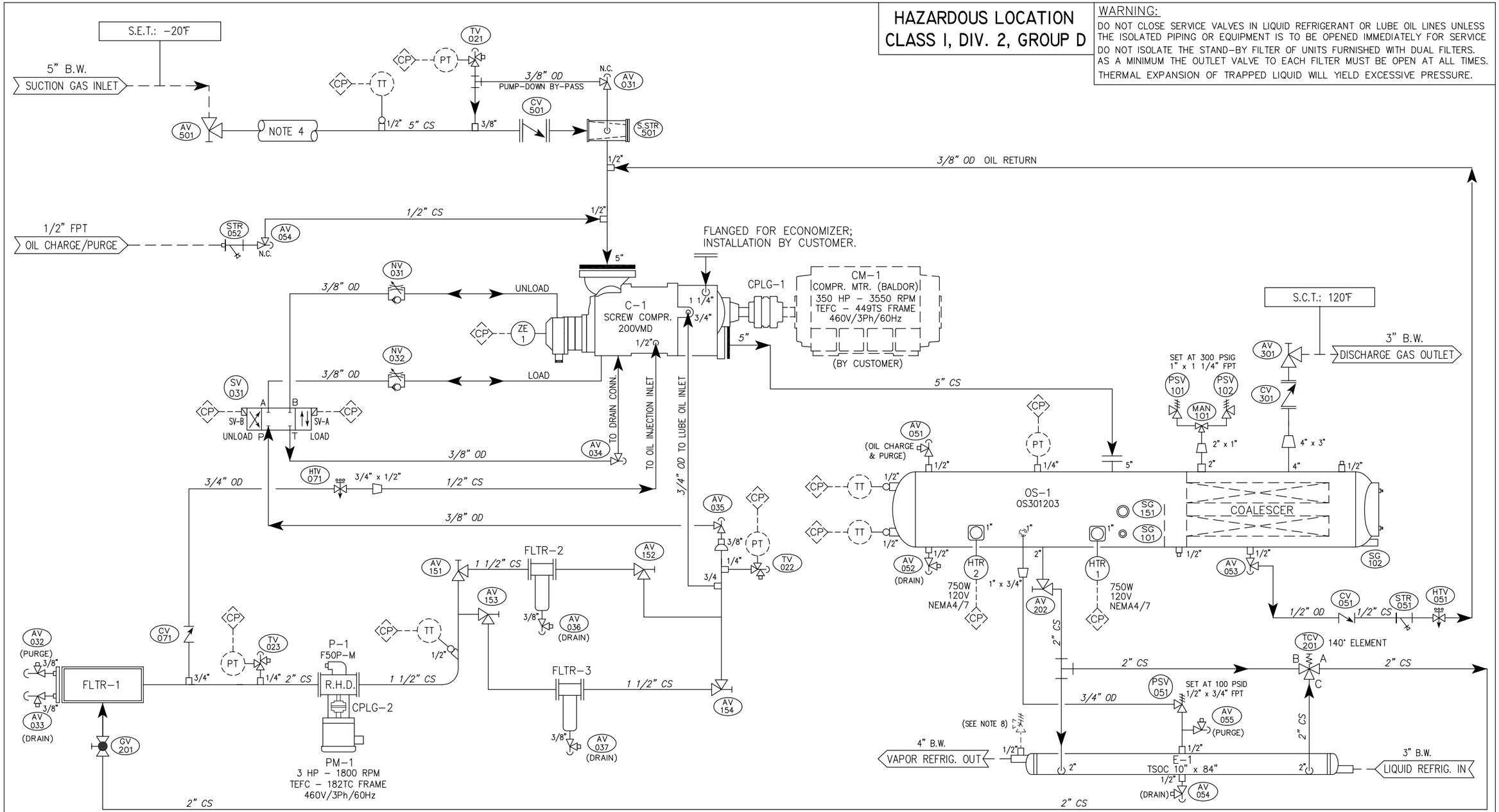

SEE DRAWING SU2295LED-I FOR SYMBOLS LEGEND, NOTE REFERALS, AND EQUIPMENT INFORMATION.

REV. NO.	DESCRIPTION	ENGR. APPRV.	DATE
A	ISSUED FOR CUSTOMER INFORMATION	RS	9-30-05

DRAWN BY: RS	DATE: 9-19-05
CHECKED BY: RS	DATE: 9-27-05
SALES OFFICE: MCT	MIR S.O.: 8597
CUSTOMER: ALCO GASS & OIL	P.O. NO.: 0991-609

MYCOM INTERNATIONAL REFRIGERATION, LTD.
SELMA, TEXAS

TITLE: PIPING & INSTRUMENTATION DIAGRAM
MICRO-COLD "V" SERIES
200VMD/OS301203
w/THERMOSYPHON OIL COOLER

JOB NO.	DWG. NO.	SHEET NO.	REV. NO.
SU2295	SU2295PI-1	1 of 1	A

THE INFORMATION CONTAINED IS THE CONFIDENTIAL PROPERTY OF MYCOM AND IS NOT FOR PUBLICATION. THE INFORMATION IS ISSUED IN THE UNDERSTANDING THAT NO PART THEREOF SHALL BE COPIED OR COMMUNICATED TO A THIRD PARTY WITHOUT WRITTEN AUTHORIZATION OF MYCOM.