FROM SHEET 101

H-1A/B BUILDING HEATER
CATALYTIC ROOM HEATER
MODEL: WX24-24-000-1 12VDC
RATED INPUT: 16000 BTU/HR
MAKE: CIS-CAN
WEIGHT: 38 LBS

E-1 OIL COOLER
MODEL: FP 10x20x60
M.A.W.P.: 450 PSIG
SURFACE AREA: 76 SQ FT
WEIGHT: 77 LBS (DRY)

E-2 GAS COOLER
MODEL: FP 10x20L-100
M.A.W.P.: 450 PSIG
SURFACE AREA: 128 SQ FT
WEIGHT: 121 LBS (DRY)

F-1 BUILDING EXHAUST FAN
MAKE: ENERTECH
MODEL: ET-20-3
RATED: 4700 SCFM
MOTOR: 1/2 HP. EXPL. PROOF
POWER: 120/1/60

CP-1 MURPHYMATIC CONTROL PANEL
MODEL: TTDJ-IGN-T
SELECTRONIC TATTLETALE
WEIGHT: 30 LBS

M-1 MUFFLER
MAKE: SILEX
MODEL: JDDPR-6-SI6-C-B
HOSPITAL PLUS GRADE
WEIGHT: LBS

D-1 DRIVER
MAKE: CUMMINS
MODEL: GTA-855
POWER: 280 BHP @ 2500 F.A.S.L.
NO. CYLINDERS: INLINE 6
DESIGN SPEED: 1800
WEIGHT: 2970 LBS (DRY)

T-1 DAY TANK
SERVICE: ENGINE OIL
VOLUME: 18 GALLONS
8"x8"x66"
WEIGHT: 125 LBS

T-2 SURGE TANK
SERVICE: GLYCOL
VOLUME: 6.7 GALLONS
8"x8"x24"

T-3 SURGE TANK
SERVICE: GLYCOL
VOLUME: 5.5 GALLONS
8"x8"x20"

E-3 AIR COOLER
MAKE: AIR-X-HEMPHILL
MODEL: 60 CVI
SERVICE: E-GLYCOL
FAN: MOORE 24-HD/VT
FAN SPEED: 645 RPM
FAN POWER: 12.5
WEIGHT: **** LBS (DRY)

T-4 WASTE OIL TANK
SERVICE: USED ENGINE OIL
VOLUME: 225 US GALLONS
WEIGHT: 1600 LBS

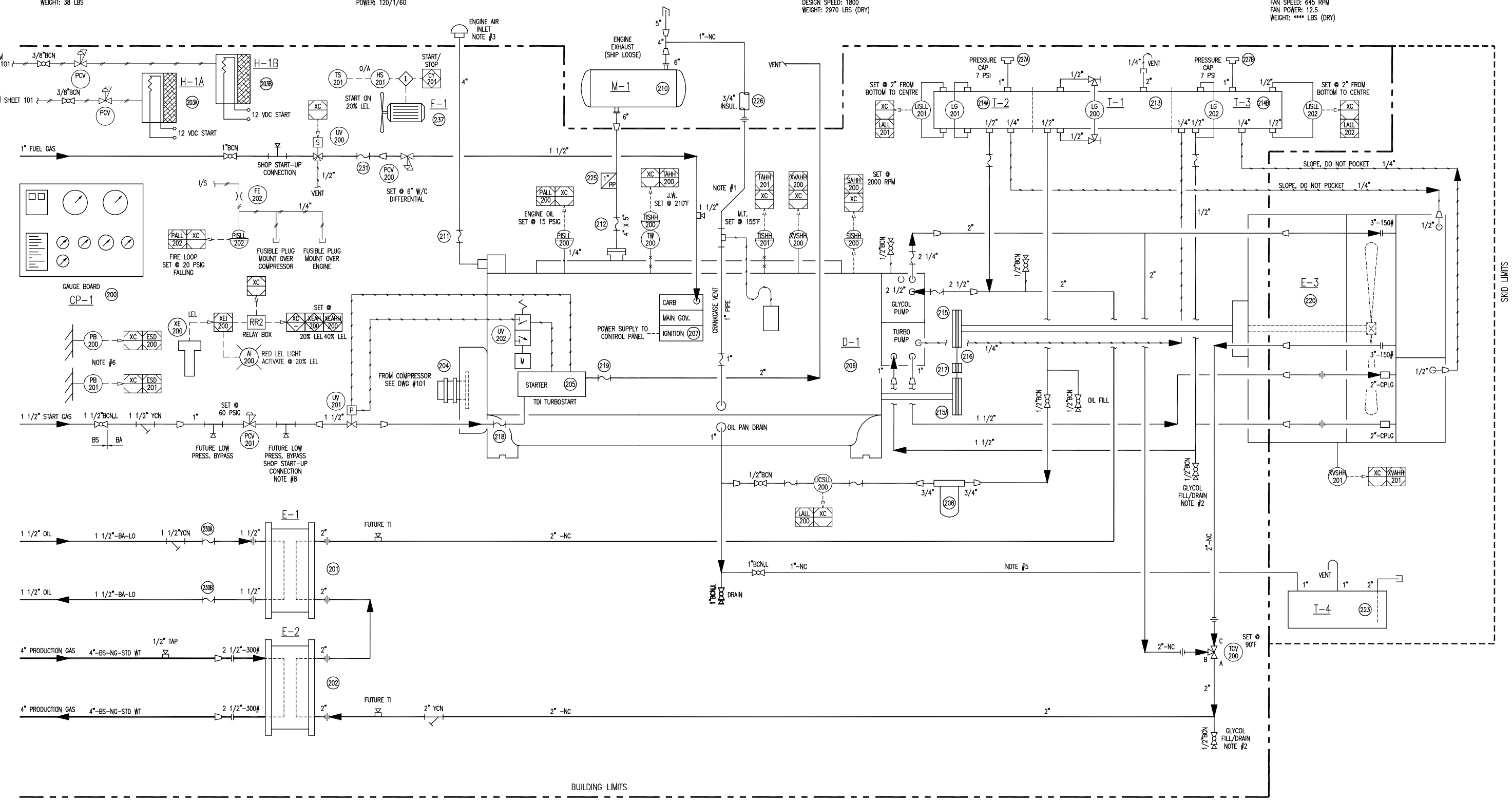

NPT/SW PIPE WT CHART

SIZE	PIPE SPECIFICATION NC	AA	BA	CA	AS	BS	CS
1/2"	80	80	80	160	XXH	XXH	XXH
3/4"	80	80	80	160	160	160	XXH
1"	80	80	80	160	160	160	XXH
1 1/4"	80	80	80	160	160	160	XXH
1 1/2"	80	80	80	160	160	160	XXH
2"	80/STD	80/STD	80/STD	160/80	160/XH	160/XH	XXH/160

GENERAL NOTES

NOTES
1. SLOPE, DO NOT TRAP. MAX. PRESSURE OF CRANKCASE +/- 0.5" W.C.
2. LOWEST POINT ON SYSTEM
3. RAIN CAP SUPPLIED WITH ENGINE
4. MOUNT AS CLOSE TO CARBURATOR AS OPERATIONALLY POSSIBLE
5. SLOPE TOWARD T-3
6. MOUNT OUTSIDE EACH DOOR C/W RED WEATHER SCHROUD
8. TAKE OFF FOR STARTER TO BE AS CLOSE TO STARTER AS POSSIBLE

REV.	DESCRIPTION	DATE	BY	APPR.
3	AS-BUILT	JAN 17/08	T.K.	
2	UPDATE AS PER CLIENT	JAN 02/08	T.K.	
1	ADD OPTIONS AS PER CLIENT	DEC 07/07	T.K.	
0	ISSUED FOR CONSTRUCTION	MAR 31/06	J.H.	

STAMPS

P&ID
PDR20/CUMMINS 855 TA
NGC JOB# 16553

DRN. BY	J.BEZAN	DATE	Nov 15/04
CHK. BY		DATE	
APR. BY		DATE	
M.O. No.	100573-74	P.O. No.	

CONCEPT COMPRESSION CORP.

FOR PENGROWTH
STIRLING 280L BOOSTER UNIT
LSD: 04-01-06-19-W4M

DWG. No. 100573-102 REV. No. 3

R:\Projects\100550-100575\100573 Pengrowth CC280L (AB)\100573-101&102-R3-Jan 17 08 (AB).dwg, 1/17/2008 10:38:45 AM

THIS DRAWING IS THE EXCLUSIVE PROPERTY OF CONCEPT COMPRESSION CORP. AND CANNOT BE REPRODUCED WITHOUT THE PERMISSION OF CONCEPT COMPRESSION CORP.

PDF created with pdfFactory trial version www.pdffactory.com