BILL OF MATERIAL

DWG. NO. 11361-1 | DWG. SIZE D | ASSEMBLY NO. | DWG. SIZE

MARK	QTY	PART NO.	DWG. NO.	DESCRIPTION	MAT. CODE	FLAME CUT	NOTES	WEIGHT
1	1	6&4LIQ2VAPORREAR	11361-2	6" & 4" LIQUID AND 2" VAPOR REAR PIPING ASSEMBLY				
2	1	6&4LIQ2VAPOFRON	11361-3	6" & 4" LIQUID AND 2" VAPOR FRONT PIPING ASSEMBLY				
3	2	RELIEF3X350ASSY	11229-23	3" 350 PSI SECONDARY RELIEF ASSEMBLY				
4	1		11361-5	RIG MAT MTG SUPPORT AND PIPING PROTECTION ASSMBLY				
5								
6	1		11361-4	90" ID CO2 STORAGE UNIT REAR SUBFRAME				
7	1		11229-3	90" ID CO2 STORAGE UNIT RUBPLATE ASSEMBLY				
8	1		11284-4	90" ID CO2 TRANSPORT LANDING GEAR SUBFRAME AND BRKT				
9	1	VESS16250CO202		VESSEL, 16,250 WG X 90 ID 325 PSI PORTABLE STORAGE				
10	1	REARIMPACTGU01		UNDER RIDE PROTECTION (CUSHION STOP)				
11	6	SUPPORTHEAD	11229-20	STEEL HEAD SUPPORT ASSEMBLY				

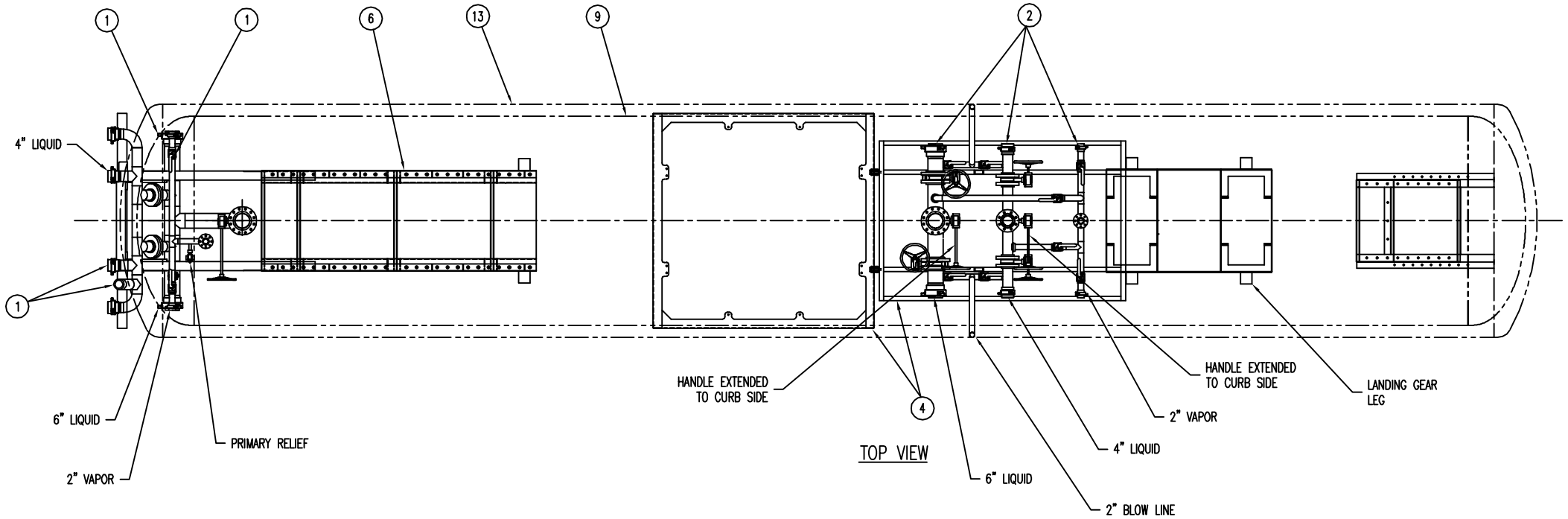

TOP VIEW

NOTES
1. ALL PIPE AND BUTT WELD PIPE FITTINGS SCHEDULE 80.
2. BLOW OFF LINE: 2" VALVES DIRECTED AWAY FROM THE OPERATOR
3. ALL OPENINGS NEED DUST CAPS AND CHAINS.
4. LANDING GEAR LEGS: 50,000 LBS W/ SOLID PIN SAND SHOES AND CHANNEL ATTACHED TO THE BOTTOM.
5. LIGHTING: TRUCK LIGHT INCANDESCENT BULBS
6. LIFT LUGS: (4) INSTALLED TOP OF TANK WITH REMOVABLE ALUM. COVER.
7. PUT PRESSURE GAUGE ON REAR HEAD (SEE LOCATION).
8. SHELL IS 22GA THK SS BRIGHT ANNEALED, HEADS 10GA SS ELECTRIC POLISHED FLANGED AND DISHED HEADS.
9. TANK VOLUME: MEASURED WITH A 8" DIAL VOLUME GAUGE (MAGNETIC STYLE) & ROTO GAUGE NO PERCENT TUBES.
10. VALVE OPERATION: 6" & 4" MANUAL GEAR, ALL 3" AND SMALLER MANUAL STD. HANDLE.
11. VALVES TYPE: 4" & 6" KEYSTONE W/ GEAR REDUCTION, 3" AND SMALLER EMICO BALL STYLE
12. ALL LINE STATIC RELIEF'S NEED TO FACE DOWN.
13. RIG MAT WILL HAVE A SINGLE POINT LIFTING MECHANISM TO LIFT STOW POSITION..
14. ALL HAMMER UNION CONNECTIONS WILL BE MALE CONNECTIONS (NOTE: MALE IS EXTERNAL ACME THREADS) 2" (1502 WECO), 4" (602 WECO), 6"(206 WECO)

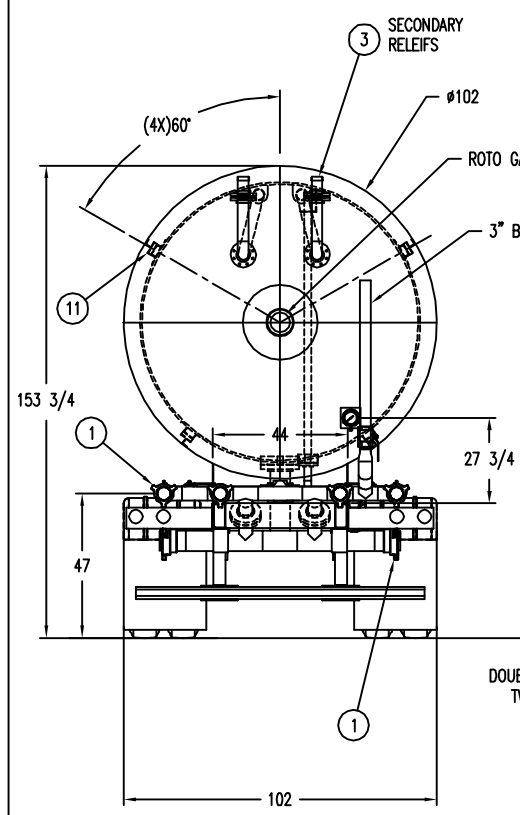

REAR VIEW

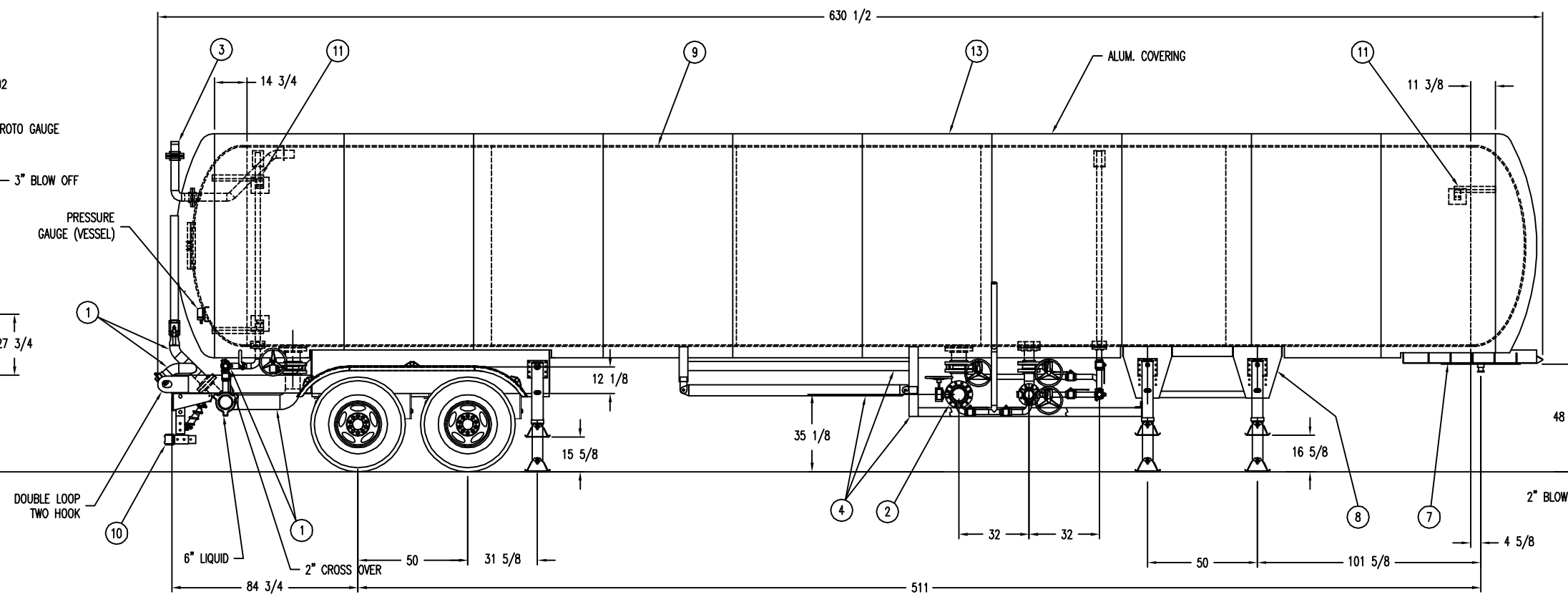

CURB SID VIEW

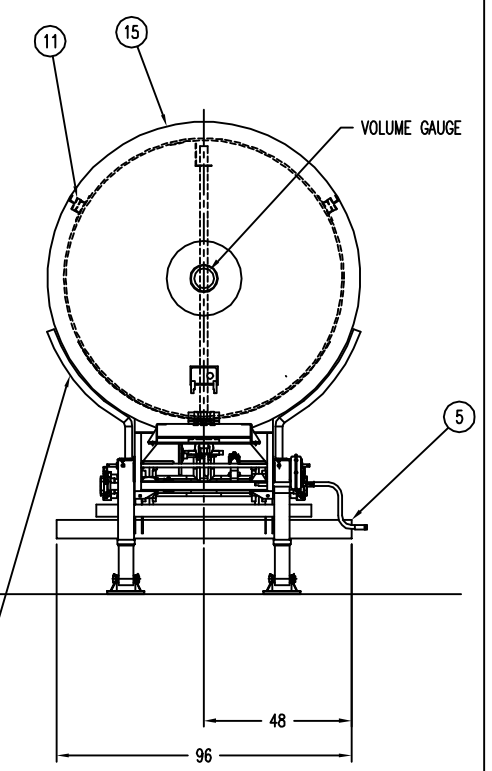

FRONT VIEW

THIS DRAWING IS THE PROPERTY OF WESTMOR INDUSTRIES, LLC IT IS NOT TO BE PRINTED, PHOTOGRAPHED, COPIED, LOANED OR USED WITHOUT PERMISSION.

TOLERANCES UNLESS SPECIFIED
DECIMAL .XX ± .03
DECIMAL .XXX ± .015
FRACTIONS ± 1/16"
ANGULAR DIMENSIONS ± 1 DEG.

SANDBLAST: SSPC-6
PRIMER:
PAINT:

REV.	ECO	DATE	DESCRIPTION OF REVISION	BY
2	E06228	8/16/06	RELEASE FOR FABRICATION	SLK
1		5/17/06	CHANGES PER CUSTOMER REQUEST	SLK
0		5/15/06	RELEASE FOR CUSTOMER REVIEW	SLK

E/0/11

WESTMOR INDUSTRIES
P.O. BOX 903
NORMAL, IN 62367
BUS: 309/888-2100

VESSEL, 16,250 W.G. X 90 I.D. 325 PSI

SCALE 1/32 | CHK'D | DATE 3/24/06 | APPV. | DRAWN SLK | W.O.#

DWG. NO. 11361-1 | DWG. SIZE D | PART/ASSY. NO. | REVISION 2