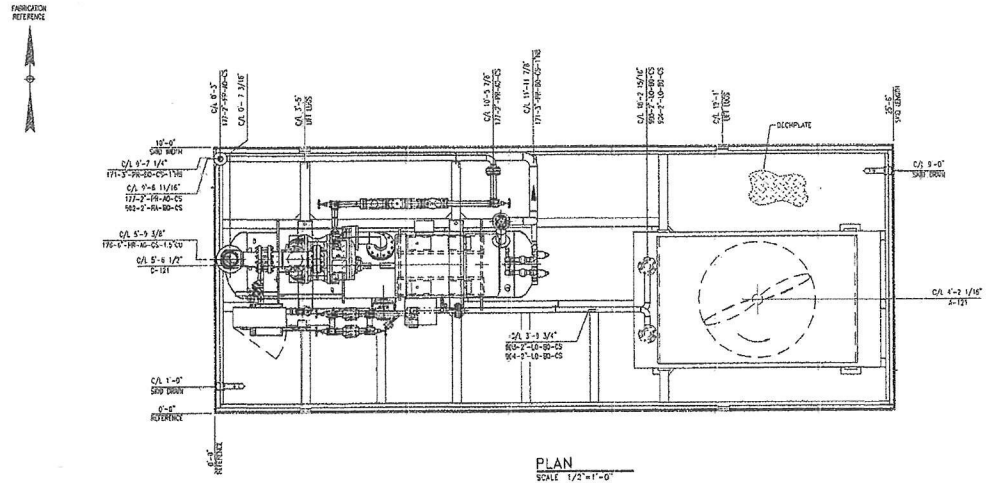

PLAN
SCALE 1/2"=1'-0"

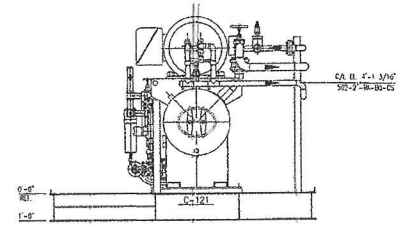

SECTION (A)
SCALE 1/2"=1'-0"

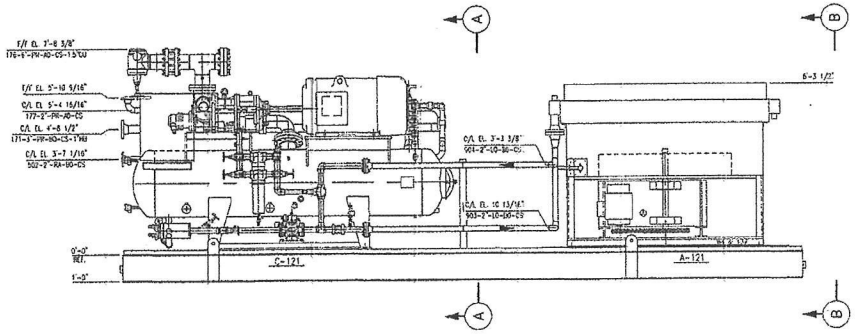

ELEVATION
SCALE 1/2"=1'-0"

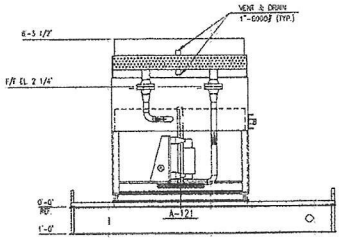

END VIEW (B)
SCALE 1/2"=1'-0"

REFRIG, COMPRESSOR & LUBE OIL SKID ASSEMBLY

SHIP LOOSE ITEMS

APPROX. WEIGHTS:
SHIPPING = 20,600#
OPERATING = 21,100#

APPROX. SHIPPING DIMENSIONS:
25'-8" L. x 10'-0" W. x 8'-10" H.

DWG NUMBER	DESCRIPTION

REFERENCE DRAWINGS

REV.	DESCRIPTION	DATE	BY	CK
0	APPROVED FOR CONSTRUCTION	SEE INDEX	ER	HB

REVISIONS

TOLERANCES

CUTS	±1/8"
ANGLES	±1/2°
WELD ASSY.	±1/4"

THIS DRAWING IS THE PROPERTY OF EXTERRAN AND IS NOT TO BE USED FOR ANY PURPOSE OTHER THAN THAT FOR WHICH IT IS SPECIFICALLY FURNISHED

Edited by: Adam
Aug 26, 2004 - 3:40am
File 35SMM-105.60-BA-02-406.DWG

EXTERRAN.

20602 E. 81st STREET
Broken Arrow, Oklahoma, 74014 (918) 251-8571

CUSTOMER: EXTERRAN
35 MMSCFD STOCK UNIT

TITLE: PLAN & ELEVATION VIEWS
REFRIG. COMPRESSOR & LUBE OIL SKID ASSEMBLY

DRAWN	DATE	APPROVED	SCALE	NO. REQ'D
E. RIP	05-08-03	HB	1/2"=1'-0"	-

DRAWING NO: STD35MM-105.60-BA-02-406
SH: NO - REV: 0

File: STD35MM-105.60-BA-02-406.DWG