DRAWING NO. SEI-KXL-TXF-0138-PIAPT | SHT 1 OF 15 | REV 7

# SUBSTATION TRANSFORMER DRAWINGS
# 20/26.66/33.33/37.33 MVA, 230KV / 6.9KV

BY

## SIEMENS ENERGY, INC.

FOR

## TRANSCANADA PIPELINE LTD.

## KXL PROJECT

## PIAPOT PUMP STATION - 3 PUMP ARRANGEMENT

DRAWING LIST:

| DRAWING NO. | REV | DESCRIPTION |
|---|---|---|
| SIE-KXL-TXF-0138-PIAPT | 7 | TITLE SHEET |
| D-8215 | 5 | NAME PLATE |
| D-8164 | 7 | OUTLINE DIMENSIONS |
| D-8891 | 2 | LV BOX CONNECTION |
| D-8207 | 6 | ACCESSORIES ONE |
| D-8208 | 4 | SCHEMATIC MOTOR DRIVE |
| D-8210 | 5 | CONTROLS LAYOUT CONNECTIONS LEFT COMPARTMENT |
| D-8206 | 8 | SCHEMATIC CONTROL COOLING |
| D-8209 | 1 | AUTO CONTROL |
| D-8212 | 3 | CONTROLS LAYOUT CONNECTIONS RIGHT COMPARTMENT |
| D-8211 | 2 | CONTROLS LAYOUT MOTOR DRIVE COMPARTMENT |
| T230W0800UT | 3 | TYPE 0 Plus Cth, IEEE, CONDENSER BUSHING (230kV) |
| T015J0400AN | 1 | TYPE Ath, IEEE, BULK BUSHING (15kV) |
| S006367-00 | 2 | STATION CLASS SURGE ARRESTER, 217752-5001, 152KV MCOV |
| B-10675 | 1 | TAG ID PLATE |

Ma_Christopher
2012/08/14
04:57:26 PM Central Daylight Time

BECHTEL 25472-101-V1A-MPC0-W0103
08

**Supplier Document Status**

**Code** 1

Code 1 = Work may proceed.
Code 2 = Revise and resubmit. Work may proceed subject to resolution of indicated comments
Code 3 = Revise and resubmit. Work may not proceed.
Code 4 = Review not required. Work may proceed.
Permission to proceed does not constitute acceptance or approval of design details, calculations, analyses, test methods, or materials developed or selected by the Supplier and does not relieve the Supplier from full compliance with contractual obligations.

Responsible Engineer - Ma_Christopher
Date Signed - 08/14/2012
VPTL - VPTL-04406
Equipment No. - 127-PIAPT-B0-T-01

NOTES

THIS DRAWING SET PERTAINS TO THE FOLLOWING PUMP STATIONS:

| STA # | MNEMONIC | STATION NAME | EQUIPMENT TAG |
|---|---|---|---|
| PS-7 | PIAPT | PIAPOT STA. | 127-PIAPT-B0-T-01 |

SIEMENS Siemens Energy Inc. Oil & Gas
TransCanada Pipeline
Doc Number SEI-KXL-TXF-0138-PIAPT
Release 7
Issued by Mainda Pitts

REFERENCE DRAWINGS

| REV | DATE Y | M | D | DESCRIPTION | BY | CHK | APP |
|---|---|---|---|---|---|---|---|
| 7 | 12 | 05 | 24 | Per cust comments | BW | MB | BW |
| 6 | 12 | 04 | 17 | Per cust comments | BW | MB | BW |
| 5 | 12 | 03 | 12 | Per cust comments, add SA info | BW | MB | BW |
| 4 | 12 | 01 | 13 | Per customer comments | BW | MB | BW |
| 3 | 11 | 07 | 15 | Per customer comments | BW | MB | BW |
| 2 | 11 | 04 | 05 | Code2 comments, 1/31/2011 addressed | SJP | MB | BW |
| 1 | 11 | 17 | 01 | For approval | FW | MB | BW |
| 0 | 10 | 11 | 01 | For approval | FW | MB | BW |

REVISION HISTORY

**SIEMENS**
Siemens Energy, Inc. / Oil & Gas
15990 N. Barkers Landing, Houston, TX 77079
Confidential property of Siemens Energy, Inc. All rights reserved.

TITLE
SUBSTATION TRANSFORMER DRAWINGS

TITLE SHEET
PIAPOT PUMPING STATION PS-7

PROJECT: TCPL KEYSTONE – KXL PROJECT
SCALE: 1.0=1.0
DRAWING NO. SEI-KXL-TXF-0138-PIAPT | SHT 1 | OF 15 | REV 7

SIEMENS

**SUBSTATION TRANSFORMER**

CLASS ONAN/ONAF/ONAF, 3 PHASES, 60 Hz, 55//65°C RISE
HV 230000 △ VOLTS, 20/22.4/26.66/29.86/33.33/37.33 MVA
LV 6900 Grd Y/ 3983.7 VOLTS, 20/22.4/26.66/29.86/33.33/37.33 MVA

**FULL WAVE IMPULSE LEVELS**

△ HV WINDING 825 kV, HV BUSHINGS 1050 kV
LV WINDING 110 kV, LV BUSHINGS 110 kV
LV NEUTRAL WINDING 110 kV, LV NEUTRAL BUSHING 110 kV
H–X ☐ IMPEDANCE BASED ON 20 MVA ON TAP 3

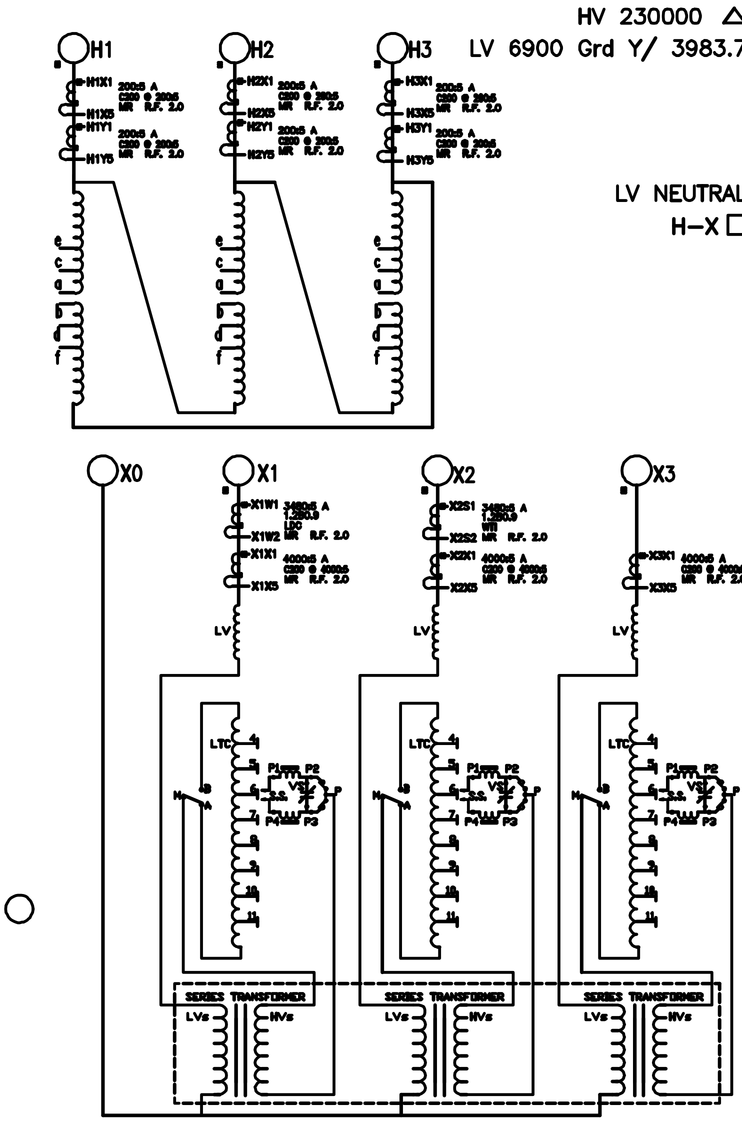


| NO-LOAD TAP CHANGER | | WINDING VOLTAGES AND CURRENTS | | | | |
|---|---|---|---|---|---|---|
| POS. | SWITCH JOIN | VOLTS | AMPERES 20 MVA | 26.66 MVA | 33.3 MVA | 37.3 MVA |
| 1 | a–b | 241500 | 48 | 64 | 80 | 89 |
| 2 | b–c | 235750 | 49 | 65 | 82 | 91 |
| 3 | c–d | 230000 | 50 | 67 | 84 | 94 |
| 4 | d–e | 224250 | 51 | 69 | 86 | 96 |
| 5 | e–f | 218500 | 53 | 70 | 88 | 99 |

LOAD–TAP CHANGER
REINHAUSEN TYPE RMV–A 600

| | LTC POSITION | CONNECTION P1 TO | P4 TO | M TO | "X" WINDINGS VOLTAGES & CURRENTS VOLTS | AMPERES 20 MVA | 26.66 MVA | 33.3 MVA | 37.3 MVA | |
|---|---|---|---|---|---|---|---|---|---|---|
| RAISE LV VOLTS | 16R | 11 | 11 | B | 7590 | 1521 | 2028 | 2533 | 2840 | FCAN |
| | 15R | 10 | 11 | | 7547 | 1530 | 2040 | 2548 | 2856 | |
| | 14R | 10 | 10 | | 7504 | 1539 | 2051 | 2562 | 2872 | |
| | 13R | 9 | 10 | | 7461 | 1548 | 2063 | 2577 | 2889 | |
| | 12R | 9 | 9 | | 7418 | 1557 | 2075 | 2592 | 2906 | |
| | 11R | 8 | 9 | | 7374 | 1566 | 2087 | 2607 | 2923 | |
| | 10R | 8 | 8 | | 7331 | 1575 | 2100 | 2622 | 2940 | |
| | 9R | 7 | 8 | | 7288 | 1584 | 2112 | 2638 | 2957 | |
| | 8R | 7 | 7 | | 7245 | 1594 | 2125 | 2654 | 2975 | |
| | 7R | 6 | 7 | | 7202 | 1603 | 2137 | 2670 | 2993 | |
| | 6R | 6 | 6 | | 7159 | 1613 | 2150 | 2686 | 3011 | |
| | 5R | 5 | 6 | | 7116 | 1623 | 2163 | 2702 | 3029 | |
| | 4R | 5 | 5 | | 7073 | 1633 | 2176 | 2718 | 3047 | |
| | 3R | 4 | 5 | | 7029 | 1643 | 2190 | 2735 | 3066 | |
| | 2R | 4 | 4 | | 6986 | 1653 | 2203 | 2752 | 3085 | |
| | 1R | M | 4 | | 6943 | 1663 | 2217 | 2769 | 3104 | |
| N | N | M | M | B/A | 6900 | 1673 | 2231 | 2786 | 3124 | |
| LOWER LV VOLTS | 1L | 11 | M | A | 6857 | 1684 | 2245 | 2804 | 3143 | FCBN |
| | 2L | 11 | 11 | | 6814 | 1695 | 2259 | 2822 | 3163 | |
| | 3L | 10 | 11 | | 6771 | 1705 | 2273 | 2840 | 3183 | |
| | 4L | 10 | 10 | | 6728 | 1716 | 2288 | 2858 | 3204 | |
| | 5L | 9 | 10 | | 6684 | 1727 | 2303 | 2876 | 3224 | |
| | 6L | 9 | 9 | | 6641 | 1739 | 2318 | 2895 | 3245 | |
| | 7L | 8 | 9 | | 6598 | 1750 | 2333 | 2914 | 3266 | |
| | 8L | 8 | 8 | | 6555 | 1762 | 2348 | 2933 | 3288 | |
| | 9L | 7 | 8 | | 6512 | 1773 | 2364 | 2952 | 3310 | |
| | 10L | 7 | 7 | | 6469 | 1785 | 2379 | 2972 | 3332 | |
| | 11L | 6 | 7 | | 6426 | 1797 | 2395 | 2992 | 3354 | |
| | 12L | 6 | 6 | | 6383 | 1809 | 2412 | 3012 | 3377 | |
| | 13L | 5 | 6 | | 6339 | 1821 | 2428 | 3033 | 3400 | |
| | 14L | 5 | 5 | | 6296 | 1834 | 2445 | 3054 | 3423 | |
| | 15L | 4 | 5 | | 6253 | 1847 | 2462 | 3075 | 3447 | |
| | 16L | 4 | 4 | | 6210 | 1859 | 2479 | 3096 | 3471 | |

**PHASE RELATION**

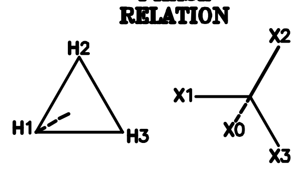


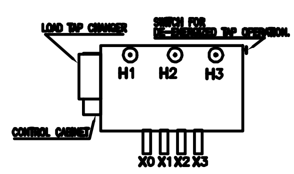


| CURRENT TRANSFORMERS | | | | |
|---|---|---|---|---|
| POS. | RATIO | CONNECTION | CLASS | |
| HV | 50:5 A | X3–X4 | | CONNECTION TERMINALS: X1..5,Y1..5 ON HV R.F. 2.0 |
| | 50:5 A | X1–X2 | | |
| | 50:5 A | X4–X5 | | |
| | 50:5 A | X2–X3 | | |
| | 100:5 A | X2–X4 | | |
| | 100:5 A | X1–X3 | | |
| | 150:5 A | X1–X4 | | |
| | 150:5 A | X2–X5 | | |
| | 200:5 A | X1–X5 | C200 | |

| CURRENT TRANSFORMERS | | | | |
|---|---|---|---|---|
| POS. | RATIO | CONNECTION | CLASS | |
| LV | 500:5 A | X1–X2 | | CONNECTION TERMINALS: X1..5 ON LV R.F. 2.0 |
| | 1000:5 A | X3–X4 | | |
| | 1500:5 A | X2–X3 | | |
| | 2000:5 A | X1–X3 | | |
| | 2500:5 A | X2–X4 | | |
| | 3000:5 A | X1–X4 | | |
| | 3500:5 A | X2–X5 | | |
| | 4000:5 A | X1–X5 | C200 | |

| CURRENT TRANSFORMERS | | | | |
|---|---|---|---|---|
| POS. | RATIO | CONNECTION | CLASS | R.F. 2.0 |
| X1 | 3480:5 A | W1–W2 | 1.2B0.9 | |

| CURRENT TRANSFORMERS | | | | |
|---|---|---|---|---|
| POS. | RATIO | CONNECTION | CLASS | R.F. 2.0 |
| X2 | 3480:5 A | S1–S2 | 1.2B0.9 | |

NOTES :

1) READ INSTRUCTION BOOK BEFORE INSTALLING AND ENERGIZING TRANSFORMER.
2) DO NOT OPERATE THE TRANSFORMER WHEN THE LIQUID LEVEL IS BELOW THE LOW POINT ON THE SCALE.
3) DO NOT OPERATE THE "NO LOAD", DE–ENERGIZED, TAP CHANGER WHEN THE TRANSFORMER IS ENERGIZED.
4) MAIN TANK, RADIATORS, DESIGNED FOR 14.7 PSI AND FULL VACUUM FILLING.
5) ALL WINDINGS ARE COPPER.
6) UNIT CONTAINS LUMINOL TRI OIL
7) AT TIME OF MANUFACTURE, THIS TRANSFORMER CONTAINED NO DETECTABLE PCB'S.
8) THE LOADING CAPACITY OF THIS TRANSFORMER IS RATED FOR SITE ALTITUDES NOT EXCEEDING 1000 METERS.
9) 230 kV WINDINGS SHALL BE SUITABLE FOR 1.8 PU OVERVOLTAGE FOR 1 SECOND AND 1.15 PU CONTINUOUS OVERVOLTAGE.

APROXIMATE WEIGHT

| | USG | LBS |
|---|---|---|
| CORE & WINDINGS (MAIN TRANSFORMER) | | 70990 |
| CORE & WINDINGS (REACTOR) | | 21380 |
| CORE & WINDINGS (SERIES) | | 14550 |
| TANK & FITTINGS | | 42140 |
| REMOVABLE RADIATORS | | 11110 |
| LOAD TAP CHANGER & MOTOR DRIVE | | 2180 |
| LIQUID IN TRANSFORMER | 6809 | 51067 |
| LIQUID IN RADIATORS | 383 | 2873 |
| LIQUID (LOAD TAP CHANGER) | 268 | 2010 |
| TOTAL LIQUID | 7460 | 55950 |
| TOTAL MASS WITH OIL | | 218300 |
| TOTAL MASS WITHOUT OIL | | 162350 |
| SHIPPING WEIGHT | | 142600 |

CAN/CSA–C88–M90

INSTRUCTION BOOK (SIEMENS) T.040N.001092.03

SERIAL No. T.040N.001092.03

MONTH/YEAR BUILT ☐

△ CUSTOMER ORDER No. 9000017832

△ DWG. D–8215 REV. 5

SIEMENS TRANSFORMADORES S.A. DE C.V.
MADE IN MEXICO

MATERIAL : STAINLESS STEEL 0.031" (0.7937mm) THK
STEEL BACKGROUND, LINES LETTERS, ETC. BLACK.

GUARANTEED IMPEDANCE AT TAP 3 IS 7.0 % AT 20 MVA

DATA, SERIAL AND TESTED IMPEDANCE WILL BE STAMPED ON NAMEPLATE.

△ EQUIPMENT TAG: 127–PIAPT–B0–T–01

REVISIONS

REV. 1 ADDED FCAN LEGEND. MARCH-07-11 ISAAC.
REV. 2 MODIFIED NOTE "9". MARCH-29-11 ISAAC.
REV. 3 MODIFIED VOLTAGE VALUE APRIL/20/11 ISAAC.
REV. 4 MODIFIED CT TABLE. MAY-31-11 ISAAC.
REV. 5 MODIFIED LEGEND "BILL HV BUSHING, ADDED THE CUSTOMER ORDER. AUG-29-11 ISAAC.

TRANSCANADA PIPELINES LIMITED
PIAPOT PUMPING STATION — EQUIPMENT TAG127-PIAPT-B0-T-01
OIL IMMERSED SUBSTATION POWER TRANSFORMER,3 PHASE, 20/22.4/26.66/29.86/33.33/37.33 MVA, 60 HZ, HV 230 KV DELTA, LV 6.9 KV Grd Y/ 3.98 KV, 55/65C RISE. CLASS ONAN/ONAF/ONAF
IEEE C57.12 | PURCHASE ORDER 9000017832
T.040N.001092.03
SIEMENS
SIEMENS TRANSFORMADORES S.A. DE C.V.
NAMEPLATE
DATE: NOV/25/10 | DR: ISAAC G.
ACOT: INCHES | CH: VICTOR G.
SCALE: M | APP: EDUARDO G.
DRAWING No. D-8215 | REV. 5

SIEMENS Siemens Energy Inc. Oil & Gas
TransCanada Pipeline
Doc Number SEI-KXL-TXF-0138-PIAPT
Release 7
Issued by Mainda Pitts

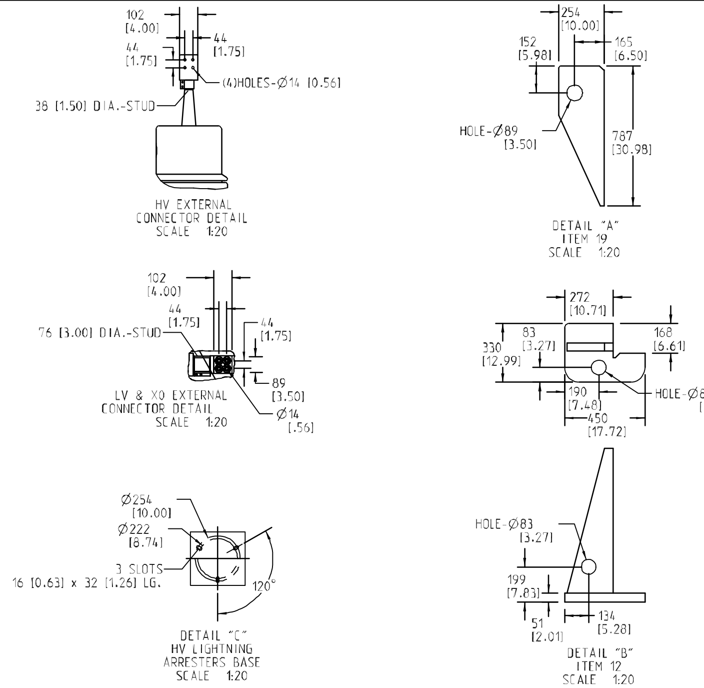


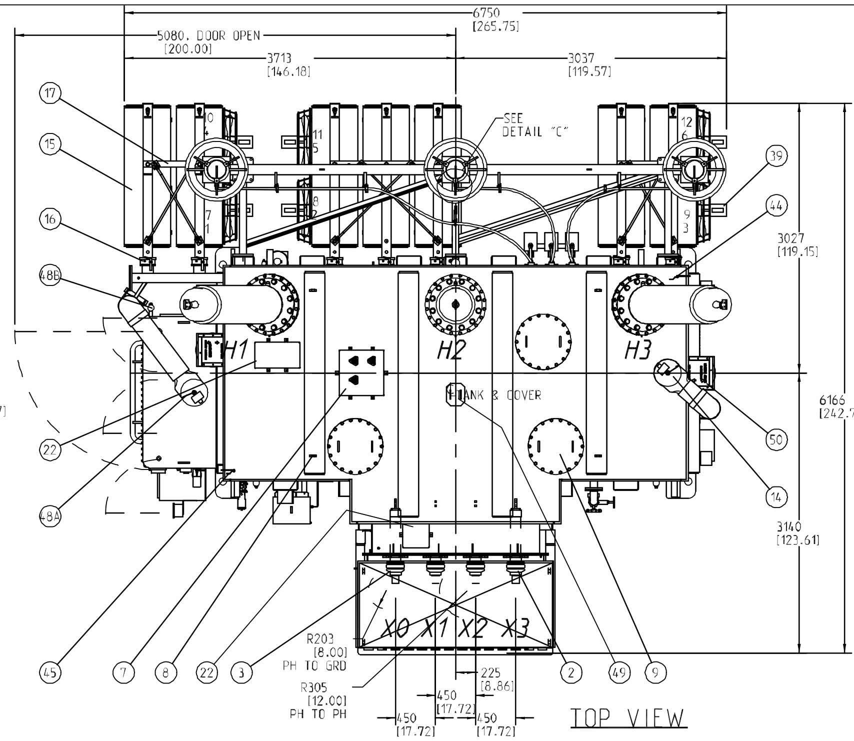


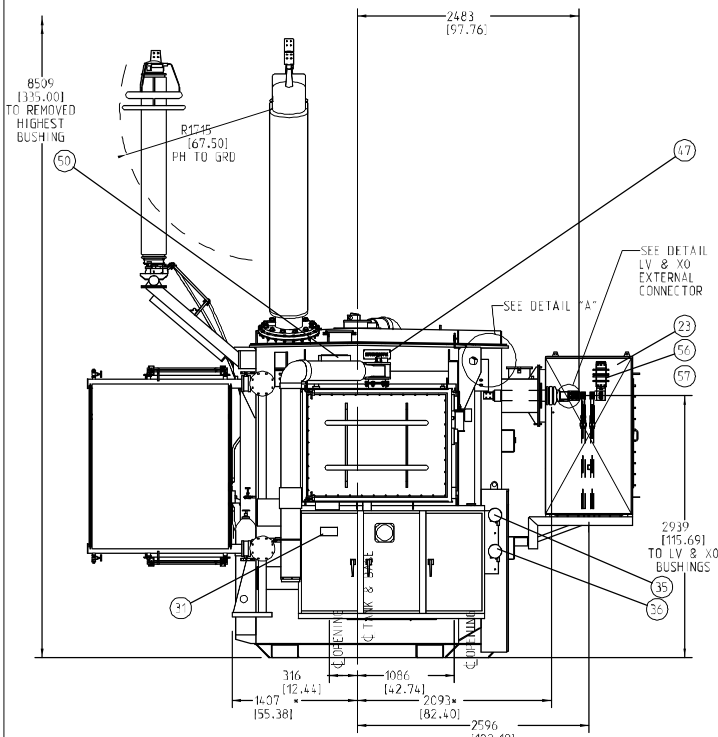


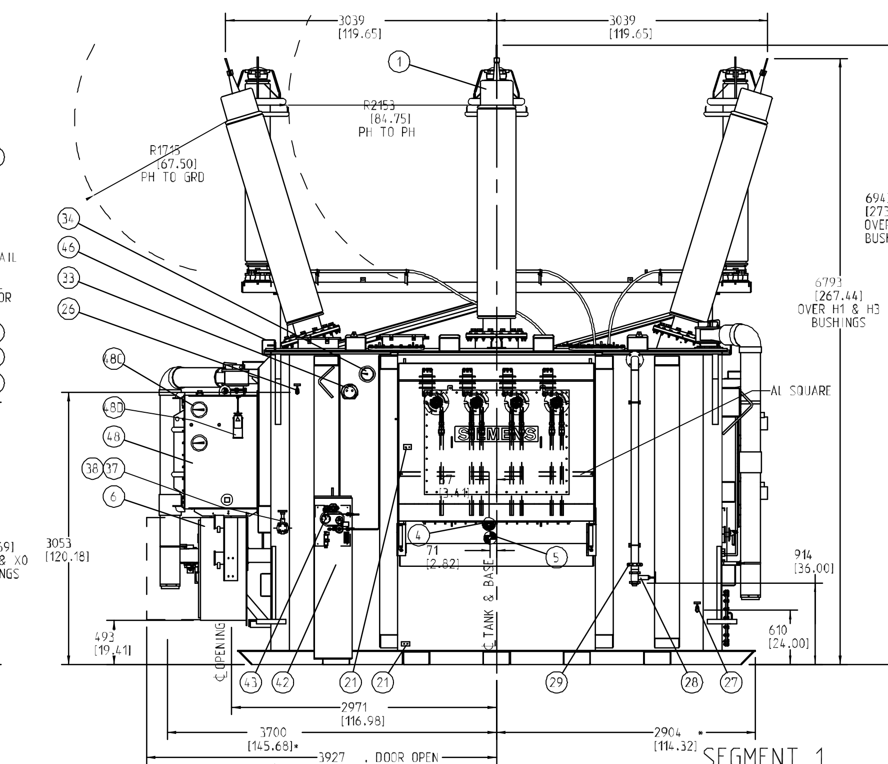


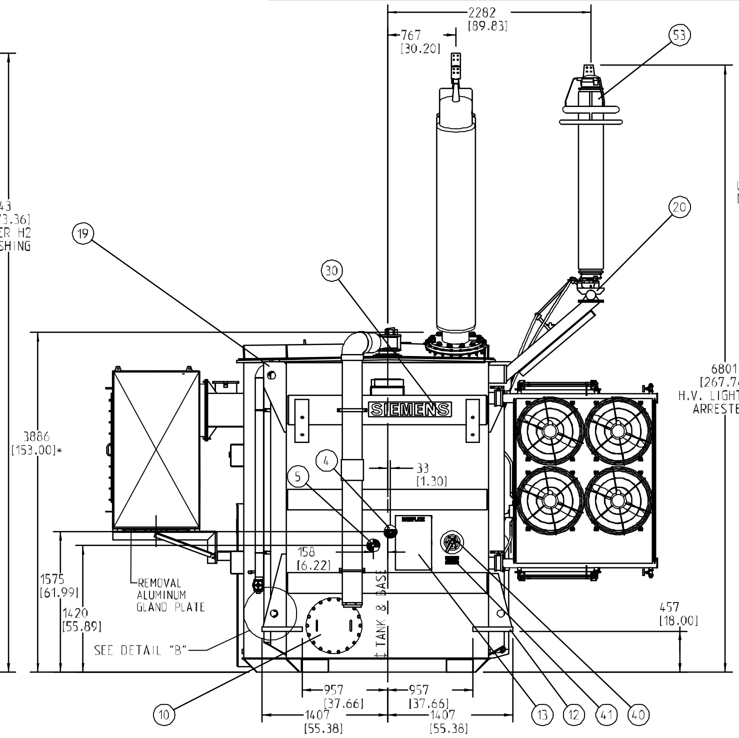


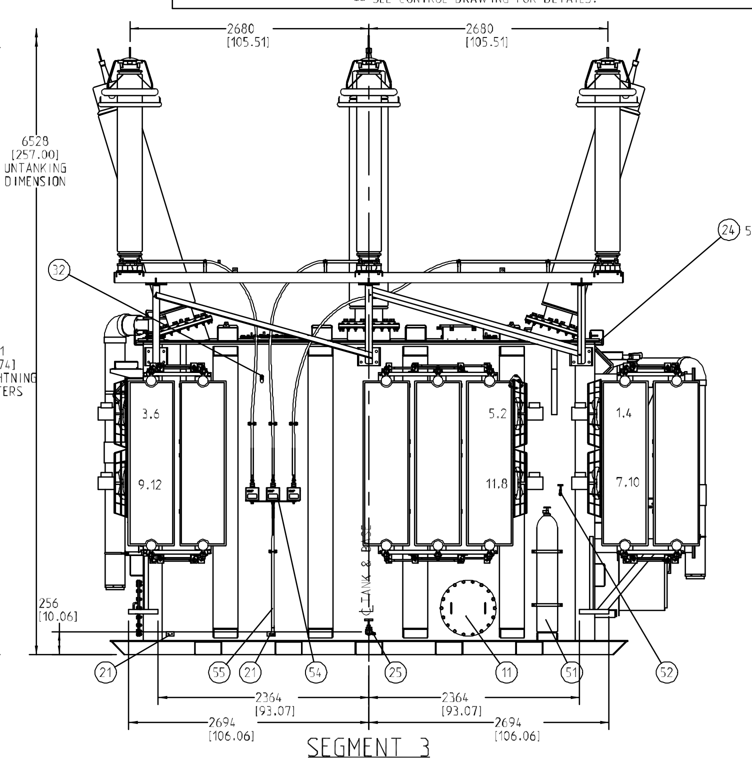


| ITEMS BOXED IN LEGEND ARE REMOVED FOR SHIPPING | | |
|---|---|---|
| ITEM | QTY | DESCRIPTION |
| 1 | 3 | H.V. BUSHING 230 kV CLASS. 1050 kV BIL. 800 A. COLOR GRAY ABB STYLE: 230W0800UT. WITH STUD 1.50" DIA-12UNF-2A x 51 [2.00]. SILVER PLATED TOP TERMINAL. EXTERNAL CONNECTOR: STUD TO FLAT NEMA 4. INTERNAL CONNECTOR: DRAW LEAD. MOUNTING TORQUE: 40 N-m. INTERNAL BUSHING SHIELD: NONE. GASKET: O'RING NITRILE BUNA-N. COLOR: BLACK. |
| 2 | 3 | L.V. BUSHING 15 kV CLASS. 110 kV BIL. 4000 A. COLOR GRAY ABB STYLE: 015J0400AN. WITH STUD 3.0" DIA-12UN-2A x 76 [3.00] SILVER PLATED TOP TERMINAL. EXTERNAL CONNECTOR: STUD TO FOUR CABLES 750 kcmil PER BUSHING. INTERNAL CONNECTOR: INTEGRAL. MOUNTING TORQUE: 40 N-m. INTERNAL BUSHING SHIELD: NONE. GASKET: O'RING NITRILE VITON. COLOR: ORANGE. |
| 3 | 1 | XO BUSHING 15 kV CLASS. 110 kV BIL. 4000 A. COLOR GRAY ABB STYLE: 015J0400AN. WITH STUD 3.0" DIA-12UN-2A x 76 [3.00] SILVER PLATED TOP TERMINAL. EXTERNAL CONNECTOR: STUD TO FOUR CABLES 750 kcmil PER BUSHING. INTERNAL CONNECTOR: INTEGRAL. MOUNTING TORQUE: 40 N-m. INTERNAL BUSHING SHIELD: NONE. GASKET: O'RING NITRILE VITON. COLOR: ORANGE. |
| 4 | 2 | CENTRE OF GRAVITY. OPERATING. WITH OIL |
| 5 | 2 | CENTRE OF GRAVITY. SHIPPING WITH DRY AIR |
| 6 | 1 | CONTROL CABINET WITH 2 (178 [7.00] x 540 [21.25] ) OPENING IN BOTTOM. WITH REMOVABLE COVER PLATE. |
| 7 | 1 | MAIN CORE. REACTOR CORE & SERIES CORE GROUND HOUSING. 1.2 kV BUSHING. |
| 8 | 4 | COVER LIFTINGS LUGS |
| 9 | 3 | MANHOLES FOR ACCESS TO BUSHINGS CONNECTIONS. 510 [20.00] DIA. |
| 10 | 1 | MANHOLES FOR ACCESS TO BUSHINGS CONNECTIONS. 510 [20.00] DIA. |
| 11 | 1 | MANHOLES FOR ACCESS TO BUSHINGS CONNECTIONS. 510 [20.00] DIA. |
| 12 | 4 | JACKING SURFACE. |
| 13 | 1 | NAME-PLATE. |
| 14 | 1 | PRESSURE RELIEF VALVE XPRD-SERIES @ 10 PSI SEMAPHORE AND PIPING WITH END PROTECTION TO DIRECT THE OIL.** |
| 15 | 7 | RADIATORS DETACHABLES (HOT DIPPED GALVANIZED) C/W 1" DIA. GLOBE VALVE FOR RADIATOR DRAIN WITH HEX HEAD PLUG & 1" DIA. GLOBE VALVE FOR RADIATOR VENT WITH HEX HEAD PLUG. |
| 16 | 14 | RADIATOR VALVE (2 PER RADIATOR) C/W POSITION INDICATOR "OPEN/CLOSE". |
| 17 | 6 | CROSS BRACES SET FOR SEISMIC (TOP AND BOTTOM). |
| 18 | 1 | TRANSFORMER BASE SUITABLE FOR SKIDDING & ROLLING. |
| 19 | 4 | TRANSFORMERS LIFTING LUGS. |
| 20 | 1 | H.V. LIGHTNING ARRESTERS SUPPORT BRACKETS DETACHABLE. |
| 21 | 4 | TRANSFORMERS GROUNDING PAD. 13 x 51 x 89 COPPER FACE. NEMA 2 HOLES 1/2" DIA-UNC TAPPED. |
| 22 | 2 | TERMINAL BOX FOR C.T. LEADS. |
| 23 | 1 | L.V. JUNCTION BOX WITH 1 (406 [16.00] x 1727 [68.00]) OPENING IN BOTTOM WITH REMOVABLE COVER PLATE. DETACHABLE. |
| 24 | 1 | WELDED UNTANKING JOINT. |
| 25 | 1 | 2.0" DIA. GLOBE VALVE FOR DRAIN WITH SAMPLER AND HEX HEAD PLUG. |

| ITEM | QTY | DESCRIPTION |
|---|---|---|
| 26 | 1 | 1.0" DIA. GLOBE VALVE FOR SAMPLING WITH HEX HEAD PLUG. |
| 27 | 1 | 1.0" DIA. GLOBE VALVE FOR FILTER PRESS WITH HEX HEAD PLUG. |
| 28 | 1 | 3.0" DIA. GATE VALVE FOR OIL FILLING AND VACUUM WITH DETACHABLE PIPING STEEL & HEX HEAD PLUG. |
| 29 | 2 | VACUUM FILL MONITORING CONNECTION TEE 1/2" DIA. NIPPLE WITH CAP. |
| 30 | 2 | TRADEMARK PLAQUE. |
| 31 | 1 | CONTROL CABINET WARNING PLATE. |
| 32 | 1 | THERMAL WELL FOR TEMPERATURE TEST (ONLY USE BY SIEMENS). |
| 33 | 1 | THERMAL WELL. QUALITROL** |
| 34 | 1 | LIQUID LEVEL GAUGE. QUALITROL (MAIN TANK).** |
| 35 | 1 | LIQUID TEMPERATURE GAUGE. QUALITROL ** |
| 36 | 1 | WINDING TEMPERATURE GAUGE. QUALITROL ** |
| 37 | 1 | 2.0" DIA. FLANGED GATE VALVE FOR SUDDEN PRESSURE RELAY. |
| 38 | 1 | SUDDEN PRESSURE RELAY. QUALITROL ** |
| 39 | 12 | COOLING FAN. 1750 RPM. KRENZ** |
| 40 | 1 | DE-ENERGIZED TAP SWITCH HANDLE SUITABLE FOR LOCKING. |
| 41 | 1 | DE-ENERGIZED TAP SWITCH CAUTION PLATE. |
| 42 | 1 | INERTAIR SYSTEM. ABB TYPE RNC2. WITH NITROGEN BOTTLE. |
| 43 | 1 | PRESURE VACUUM GAUGE (INSIDE INERTAIR CABINET). |
| 44 | 1 | 0.25" DIA. BALL VALVE FOR NITROGEN INLET. |
| 45 | 1 | 0.25" DIA. BALL VALVE FOR NITROGEN OUTLET. |
| 46 | 1 | 0.375" DIA. COPPER PIPE FOR CONNECTION OF EQUIPMENT INERTAIR TO MAIN TANK. |
| 47 | 1 | TAG NUMBER ASSIGNED "127-PIAPT-B0-T-01". |
| 48 | 1 | ON LOAD TAP CHANGER MR RMV-II-1500. 400 kV BIL. 1500 AMPS. |
| 48A | 1 | PRESSURE RELIEF VALVE XPRD-SERIES @ 10 PSI FOR LOAD TAP CHANGER SEMAPHORE AND PIPING WITH END PROTECTION TO DIRECT THE OIL.** |
| 48B | 1 | 1.0" DIA. GLOBE VALVE FOR DRAIN WITH HEX HEAD PLUG. |
| 48C | 1 | LIQUID LEVEL GAUGE WITH ALARM CONTACS** |
| 48D | 1 | DEHYDRATING SILICA GEL BREATHER. |
| 49 | 1 | FALL PROTECTION PLATE WELD-ON TANK COVER. (USE BY SIEMENS). |
| 50 | 2 | IMPACT RECORDER FOR SHIPPING. |
| 51 | 1 | DRY AIR CYLINDER FOR SHIPPING. |
| 52 | 1 | 0.50" DIA. GLOBE VALVE FOR DRY AIR SYSTEM TRANSPORT. |
| 53 | 3 | H.V. LIGHTNING ARRESTERS. 192 kV DUTY CYCLE RATING. 152 kV MCOV OHIO BRASS. CAT: 217752-5001. |
| 54 | 3 | DISCHARGES COUNTER. OHIO BRASS. |
| 55 | 1 | H.V. LIGHTNING GROUNDING CONNECTION. 4/0 AWG & COPPER BUS BAR 1/4" x 2". |
| 56 | 4 | INSULATORS |
| 57 | 4 | ARRANGEMETS TO PLATE COPPER |
| | | |
| ** SEE CONTROL DRAWING FOR DETAILS. | | |

NOTES:
1.- THIS DRAWING WHEN CERTIFIED MAY BE USED FOR CONSTRUCTION SUBJECT TO STANDARD TOLERANCE ON ALL DIMENSIONS OF +/- 1%.
2.- SHIPPING DIMENSIONS ARE MARKED THIS (*).
3.- TRANSFOMER TO BE SHIPPED WITH DRY AIR.
4.- USE ALL 4 LIFTING LUGS TO LIFT TRANSFORMER.
5.- USE ALL 4 LUGS TO LIFT CORE AND COILS.
6.- USE ALL 4 LIFTING LUGS TO LIFT COVER.
7.- MAXIMUM DESIGNED FOR AN ALTITUDE OF 3300 FASL.
8.- HARDWARE: STAINLESS STEEL TYPE S.S 316 (BOLT) AND SILICON BRONZE (NUT).
9.- SIEMENS Transformadores S.A de C.V. TO SUPPLY 1 SPARE SET OF GASKETS.
10- THIS UNIT WAS FILLED AND PROCESSED WITH TYPE II NON-PCB DIELECTRIC FLUID HAVING A PCB CONTENT OF 1 PPM OR LESS.
11.- COVER SLOPED AND PAINTED WITH NON SKID COATING.
12.- THIS UNIT SHALL BE SHIPPED WITH ARRANGEMENTS FOR SWEEP FRECUENCY RESPONSE ANALYSIS (SFRA) TEST BEFORE AND AFTER SHIPPING.
13.- THE L.V. BOX HEIGHT IS SUITABLE TO ACCOMMODATE 15kV CABLE WITH STRESS CONE.
14.- THE REMOVAL ALUMINUM GLAND PLATE SIZE CONSIDERED IS ACCORDING ARRANGEMENT CONNECT 12 x 1C x 750 MCM.

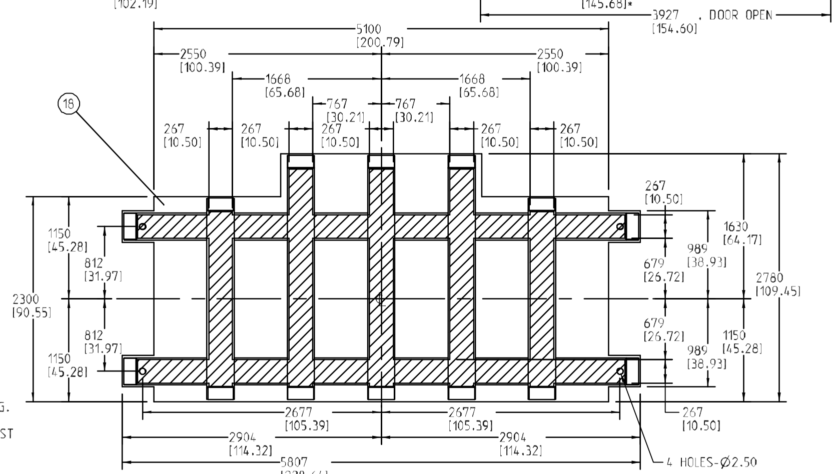


BASE DETAIL

HATCH PORTION IN BASE DETAIL INDICATED SAFETY AREA TO PLACED ROLLER

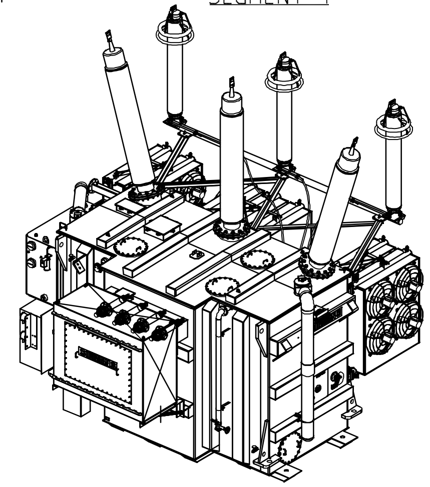

REVISIONS

REV. 1. December 02. 2010. ABDIEL H.
*Description item 6 & 48 were modified.
*Size control cabinet was changed.
*Openings dimensions were modified.

REV 2. March 01. 2011. ABDIEL H.
*Style items 1 & 53 were modified.
*Quantity items 15 & 16 were corrected.
*Bushings height HV were modified. before H1 & H3 = 6046 [238.04]. H2 = 6162 [242.61].
*Height to removed highest bushing was modified. before 7823 [308.00].
*Shipping Lenght was modified.
*All dimensions were changed to milimeters and inches units.

REV 3. March 16. 2011. ABDIEL H.
*Description items 1 & 39 were modified.
*Shipping Width was modified.

REV 4. June 14. 2011. MANUELCA.
*Item 23 was changed.
*LV & XO External Connector Detail was changed
*Dimensions of width were changed
*Item 56 & 57 were added.

REV 5. June 28. 2011. MANUELCA.
*Description Item 42 was changed.

REV 6. Oct 31. 2011. Edson H.
*Item 58 was added
*Items 14 and 48A were modified.

Rev 7 Jan, 2012 Edson H.
*TAG Number was added
*Item 58 was deleted

| INTERNAL DIMS: 2250 [88.58] x 5045 [198.62] x 3350 [131.89] | | 7 PIAPOT PUMPING STATION | EQUIPMENT TAG:127-PIAPT-B0-T-01 |
|---|---|---|---|
| TANK STRENGTH | | PROJECT NAME: | KEYSTONE XL OIL PIPELINE PROJECT |
| +14.7 PSI | -14.7 PSI | CUSTOMER ORDER: | 9000017832 |
| | | SIEMENS ORDER: | T.040N.001092.03 |

| ESTIMATED MASS IN LBS | | |
|---|---|---|
| CORE & WINDINGS (MAIN TRANSFORMER) | | 70990 |
| CORE & WINDINGS (REACTOR) | | 21380 |
| CORE & WINDINGS (SERIES) | | 14550 |
| TANK & FITTINGS | | 42140 |
| REMOVABLE RADIATORS | | 11110 |
| LOAD TAP CHANGER & MOTOR DRIVE | | 2180 |
| LIQUID (TRANSFORMER) | 6809 USG | 51067 |
| LIQUID (RADIATORS) | 383 USG | 2873 |
| LIQUID (LOAD TAP CHANGER) | 268 USG | 2010 |
| TOTAL LIQUID | 7460 USG | 55950 |
| TOTAL MASS WITH OIL | | 218300 |
| TOTAL MASS WITHOUT OIL | | 162350 |
| SHIPPING MASS | | 142600 |

CERTIFIED BY: TRANSCANADA PIPELINES LIMITED
TYPE: ONAN/ONAF/ONAF — OIL FILLED TRANSFORMER
MVA: 20/26.66/33.33//37.33
H.V.: 230 kV. ±2 x 2.5% STEPS DELTA
L.V.: 6.9 kV. ±16 x 0.625% STEPS WYE
3 PHASES. 60 Hz. 55/65°C TEMPERATURE RISE
PAINT: LIGHT GRAY ANSI 70

OUTLINE DIMENSIONS

SIEMENS

Siemens Transformadores S.A. de C.V.

| DATE: November 12. 10 | DRAWN BY: ABDIEL H. | D-8164 |
|---|---|---|
| SCALE: 1:40 | CHECKED BY: ALEJANDRO G. | |
| UNITS: MM [IN] | APPROVED BY: MIGUEL S. | |

SIEMENS Siemens Energy Inc. Oil & Gas
**TransCanada Pipeline**
**Doc Number SEI-KXL-TXF-0138-PIAPT**
**Release 7**
**Issued by Mainda Pitts**

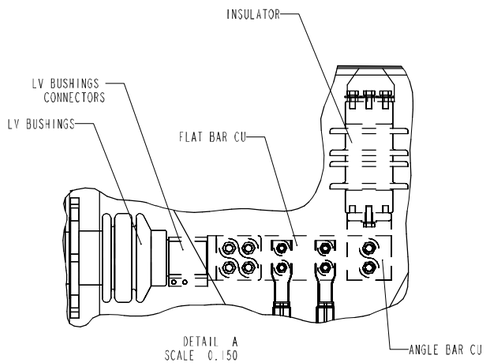


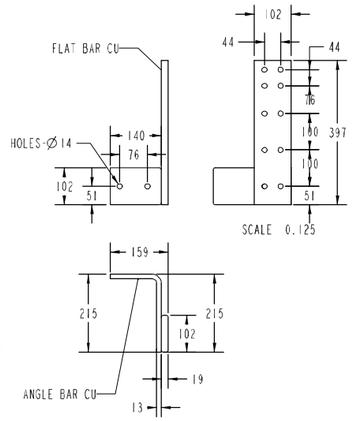


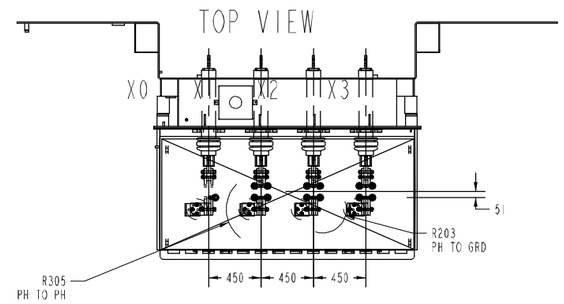


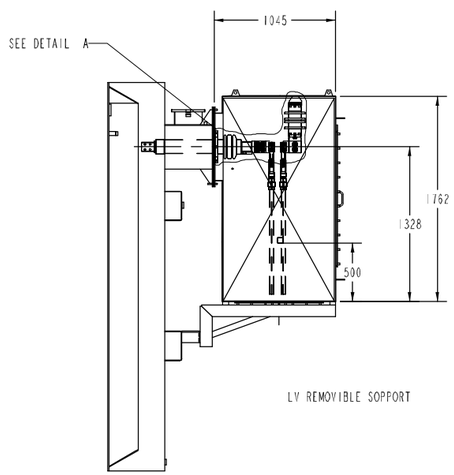


LEFT VIEW

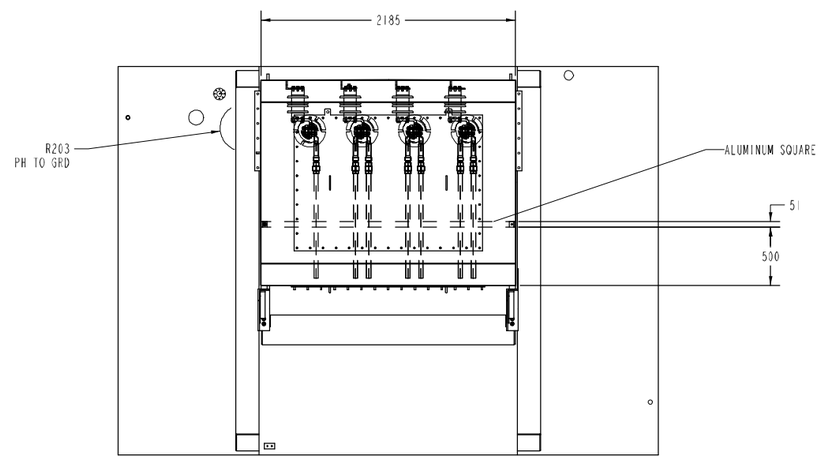


FRONT VIEW

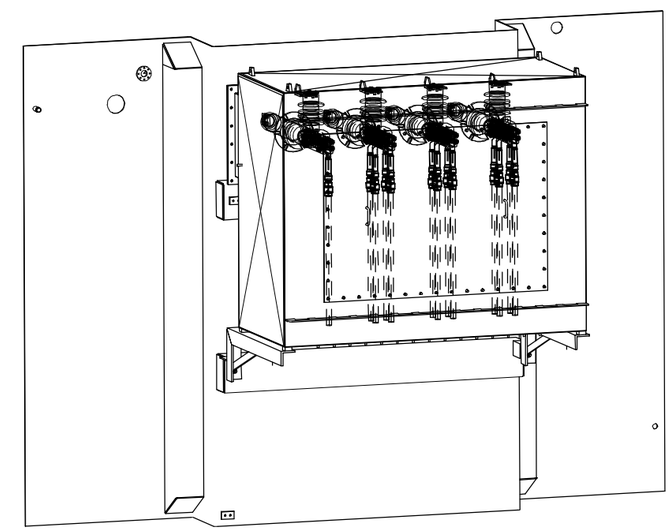

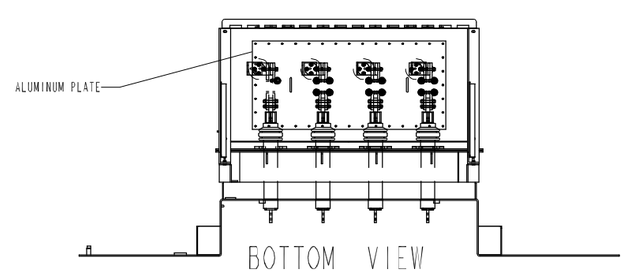


BOTTOM VIEW

SIEMENS Siemens Energy Inc. Oil & Gas
TransCanada Pipeline
Doc Number SEI-KXL-TXF-0138-PIAPT
Release 7
Issued by Mainda Pitts

2 P.O. 9000017832
TAG 127-PIAPT-B0-T-01 Piapot Unit 1092.03

| | | | | | |
|---|---|---|---|---|---|
| REV:1 11/04/11, Edson H. Electric Heaters was added Rev 2 01/06/12, Edson H. Tag number was modified Electric Heaters was deleted | SIEMENS Siemens Transformadores S.A. de C.V. | | | | |
| | TITULO DEL DIBUJO: LV BOX CONNECTION | | | | |
| | PESO: NA | FECHA: 09-Jun-11 | DIBUJO: MANUELCA | REVISO: | APROBO: |
| | DIBUJO ESCALA: 0.025 | DIBUJO NUMERO: D-8891 | | TP NUMERO 1092.03 | |

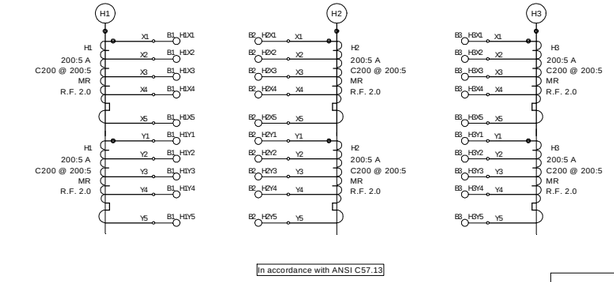


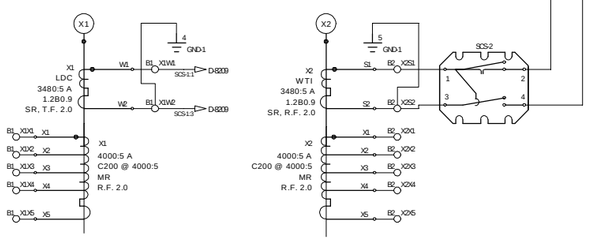


WARNING!
CURRENT TRANSFORMER SECONDARIES
MUST NOT BE OPEN CIRCUITED WHEN
THE PRIMARY IS ENERGIZED.

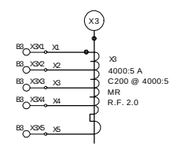


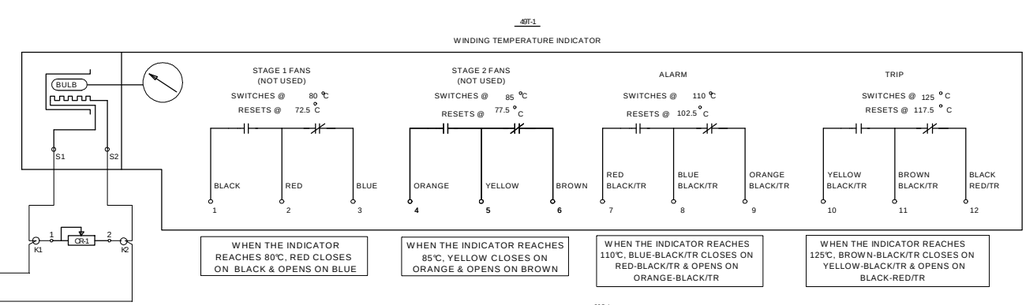


WHEN THE INDICATOR REACHES 80°C, RED CLOSES ON BLACK & OPENS ON BLUE

WHEN THE INDICATOR REACHES 85°C, YELLOW CLOSES ON ORANGE & OPENS ON BROWN

WHEN THE INDICATOR REACHES 110°C, BLUE-BLACK/TR CLOSES ON RED-BLACK/TR & OPENS ON ORANGE-BLACK/TR

WHEN THE INDICATOR REACHES 125°C, BROWN-BLACK/TR CLOSES ON YELLOW-BLACK/TR & OPENS ON BLACK-RED/TR

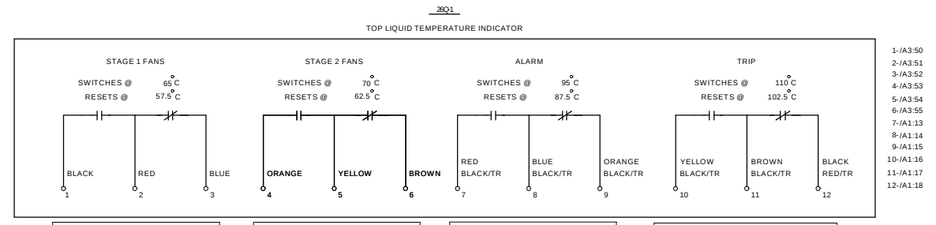


WHEN THE INDICATOR REACHES 65°C, RED CLOSES ON BLACK & OPENS ON BLUE

WHEN THE INDICATOR REACHES 70°C, YELLOW CLOSES ON ORANGE & OPENS ON BROWN

WHEN THE INDICATOR REACHES 95°C, BLUE-BLACK/TR CLOSES ON RED-BLACK/TR & OPENS ON ORANGE-BLACK/TR

WHEN THE INDICATOR REACHES 110°C, BROWN-BLACK/TR CLOSES ON YELLOW-BLACK/TR & OPENS ON BLACK-RED/TR

| DEVICE NUMBER | ACCESSORY | RATING | MODEL | MANUFACTURER |
|---|---|---|---|---|
| SCS-2 | SWITCH | 30 A | 202-C | STATES |
| | SHORTING SWITCH W/TEST PLUG | | | |
| B1...3 | TERMINAL BLOCKS | 600 VAC, 47 A | SAKB 10C | WEIDMULLER |
| | TERMINAL BLOCK MOUNTS ON DIN RAIL, TYPE SAKB 10C. | | | |
| A1...3 | TERMINAL BLOCK | 50.0 A | UT 6 | PHOENIX CONTACT |
| | TERMINAL BLOCKS (UL 94 V0, #24 - 8 AWG) | | | |
| 63P-1 | RELAY | 125Vdc (contacts) | XPRD00-00023750 | QUALITROL |
| | PRESSURE RELIEF DEVICE 10PSI (69KPa), 0.5 A, No inductive (contacts) ,ADDITION ( 8" PVC PIPING KIT) | | | |
| 63P-LTC | RELAY | 125Vdc (contacts) | XPRD00-00023750 | QUALITROL |
| | PRESSURE RELIEF DEVICE 10PSI (69KPa), 0.5 A, No inductive (contacts) ,ADDITION ( 8" PVC PIPING KIT) | | | |
| 63FP1 | RELAY | 125 Vdc, (Contacts) | 900-010-02 CS-40344 | QUALITROL |
| | RAPID PRESSURE RISE RELAY FLANGE MOUNTING | | | |
| 63X-1 | RELAY | 125VDC | 909-200-01 | QUALITROL |
| | SEAL-IN RELAY C/W RESET | | | |
| 71Q-1 | GAUGE | 125Vdc, 0.50 A (Contacts) | 032-058-01 CS-35155 | QUALITROL |
| | LIQUID LEVEL INDICATOR,2 SWITCHES,ENGLISH,FLOAT 26.38" | | | |
| 71Q-LTC | GAUGE | 0.50 A (Contacts) | MESSKO-LLI(2) | MR |
| | LIQUID LEVEL INDICATOR 2 SWITCHES MIN/MIN (HORIZONTAL FLOAT) | | | |
| F-1...2 | FUSE | 250 Vac, 5.0 A. | FRN-R-5 | BUSSMAN |
| | DOUBLE ELEMENT FUSE WITH TIME DELAY | | | |
| ADDITION | FUSE BASE | 250 Vac, 30 A | R25030-2SR | BUSSMAN |
| | FUSES BASE 2 POLES | | | |
| 49T-1 | GAUGE | 125 Vdc (Contacts) | TR6000-00022972 | QUALITROL |
| | WINDING TEMP. INDICATOR (ANALOG) 4 FORM C SWITCHES | | | |
| ADDITION | CALIBRATING RESISTOR | 3.0 ohms, 50 Watts | D50K3RO | OHMITE |
| | CALIBRATING RESISTOR 4.07 A MAXIMUM RATING | | | |
| 26Q-1 | GAUGE | 0.50 A (Contacts) | TR6000-00028164 | QUALITROL |
| | LIQUID TEMP. INDICATOR (ANALOG) 4 FORM C SWITCHES. | | | |
| ADDITION | THERMAL PLATE | 5.0 A | 2WTL-1027-2 | QUALITROL |
| | THERMAL PLATE - 2WTL W/ TERMINAL BLOCK | | | |
| A1...3 | TERMINAL BLOCK | 50.0 A | UT 6 | PHOENIX CONTACT |
| | TERMINAL BLOCKS (UL 94 V0, #24 - 8 AWG) | | | |
| K1...2 | TERMINAL BLOCK | 50.0 A | UT 6 | PHOENIX CONTACT |
| | TERMINAL BLOCKS (UL 94 V0, #24 - 8 AWG) | | | |
| 63PV1 | NITROGEN SYSTEM | 0.50 A Non-Inductive (Contact) | RNC2 | ABB |
| | INERTAIRE OIL PRESERVATION SYS. HIGH/LOW PRESSURE & EMPTY CYLINDER ALARM SWS | | | |

| CURRENT TRANSFORMERS | | | |
|---|---|---|---|
| POS. | RATIO | CONNECTION | CLASS |
| HV | 50:5 A | X3-X4 | C200 |
| | 50:5 A | X1-X2 | |
| | 50:5 A | X4-X5 | |
| | 50:5 A | X2-X3 | |
| | 100:5 A | X2-X4 | |
| | 100:5 A | X1-X3 | |
| | 150:5 A | X1-X4 | |
| | 150:5 A | X2-X5 | |
| | 200:5 A | X1-X5 | |

CONNECTION TERMINALS: X1, S.Y.T. S ON HV
R.F. 2.0

| CURRENT TRANSFORMERS | | | |
|---|---|---|---|
| POS. | RATIO | CONNECTION | CLASS |
| LV | 500:5 A | X1-X2 | C200 |
| | 1000:5 A | X3-X4 | |
| | 1500:5 A | X2-X3 | |
| | 2000:5 A | X1-X3 | |
| | 2500:5 A | X2-X4 | |
| | 3000:5 A | X1-X4 | |
| | 3500:5 A | X2-X5 | |
| | 4000:5 A | X1-X5 | |

CONNECTION TERMINALS: X1, S.Y.T. LV
R.F. 2.0

| CURRENT TRANSFORMERS | | | |
|---|---|---|---|
| POS. | RATIO | CONNECTION | CLASS |
| X1 | 3480:5 A | W1-W2 | 1.2B0.9 |

R.F. 2.0

| CURRENT TRANSFORMERS | | | |
|---|---|---|---|
| POS. | RATIO | CONNECTION | CLASS |
| X2 | 3480:5 A | S1-S2 | 1.2B0.9 |

R.F. 2.0

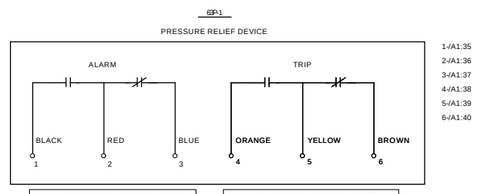


WHEN THE DEVICE REACHES 10 PSI, RED CLOSES ON BLACK & OPENS ON BLUE

WHEN THE DEVICE REACHES 10 PSI, YELLOW CLOSES ON ORANGE & OPENS ON BROWN

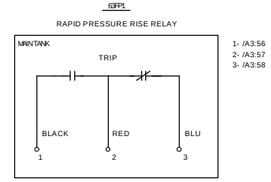


WHEN THE DEVICE REACHES ONE RAPID PRESSURE, RED CLOSES ON BLACK & OPENS ON BLUE

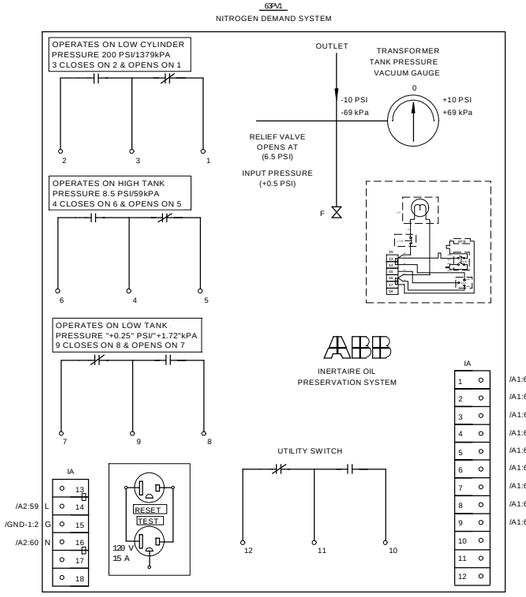


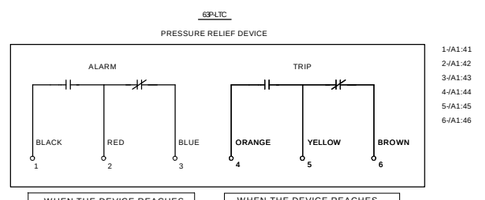


WHEN THE DEVICE REACHES 10 PSI, RED CLOSES ON BLACK & OPENS ON BLUE

WHEN THE DEVICE REACHES 10 PSI, YELLOW CLOSES ON ORANGE & OPENS ON BROWN

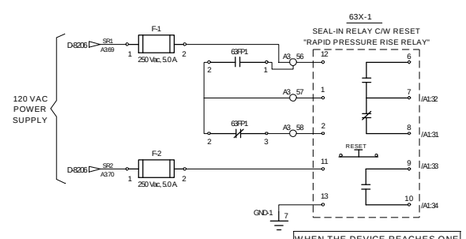


WHEN THE DEVICE REACHES ONE RAPID PRESSURE, 7 CLOSES ON 6 & OPENS ON 8

WHEN THE DEVICE REACHES ONE RAPID PRESSURE,9 CLOSES ON 10

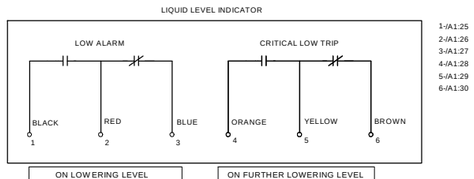


ON LOWERING LEVEL RED CLOSES ON BLACK AT MARK "LOW".

ON FURTHER LOWERING LEVEL YELLOW CLOSES ON ORANGE AT MARK "CRITICAL LOW"

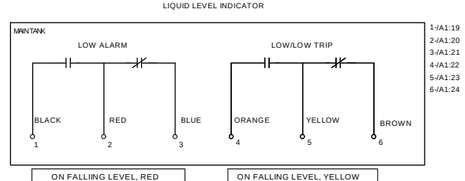


ON FALLING LEVEL, RED CLOSES ON BLACK & OPENS ON BLUE AT "LOW".

ON FALLING LEVEL, YELLOW CLOSES ON ORANGE AT MARK "LOW-LOW".

CONTACT RATINGS (SEAL-IN-RELAY "909-200-01")

| VOLTAGE VOLTS | MAKE (AMPS) | CARRY (AMPS) | BREAK (AMPS) RESISTIVE | BREAK (AMPS) INDUCTIVE |
|---|---|---|---|---|
| 120 VAC | 20 | 10 | 10 | 5 |
| 240 VAC | 20 | 10 | 5 | 2.5 |
| 24 DC | 20 | 10 | 5 | 3 |
| 48 DC | 20 | 10 | 2 | 1 |
| 125 DC | 20 | 10 | 0.5 | 0.25 |

*NOTE: RESPONSE TIME OF CONTACTS ( 40-50 msec.)

REFERENCE DWGS: D-8206,D-8208,D-8209,D-8210,D-8212.

SIEMENS Siemens Energy Inc. Oil & Gas
TransCanada Pipeline
Doc Number SEI-KXL-TXF-0138-PIAPT
Release 7
Issued by Mainda Pitts

NOTE:
- ☐ CHANGE INDICATED BY CUSTOMER.
- △ CHANGE MADE BY SIEMENS.
- THE NUMBER INDICATE THE REVISION.

REVISIONS

REV. 1
ADDED: LEGENDS TO (49T-1,26Q-1,63P-1 63P-LTC,63FP1,63X-1,63PV1).
JAN/31/11 ISAAC.
REV. 2
MODIFIED: CONNECTIONS (63X-1:7,8).
MARCH/07/11 ISAAC.
REV. 3
A) MODIFIED: LEGEND (49T-1,63P-1, 63P-LTC),AND COLORS IN THE LEGENDS 63P-1,63P-LTC,71Q-LTC.).
MAY/30/11 ISAAC.
REV. 4
ADDED: CIRCUIT TO INERTAIRE 63PV1.
JUNE/15/11 ISAAC.
REV. 5
MODIFIED: THE EQUIPMENT TAG.
AUGUST/29/11 ISAAC.
REV. 6
MODIFIED: THE LEGEND (63P-1,63P-LTC).
NOVEMBER/03/11 ISAAC.

TRANSCANADA PIPELINES LIMITED
PIAPOT PUMPING STATION EQUIPMENT TAG:127-PIAPT-B0-T-01

OIL IMMERSED SUBSTATION POWER TRANSFORMER, 3 PHASE, 20/22.4/26.66/29.86/33.33/37.33 MVA, 60 HZ.
HV 230 KV DELTA, LV 6.9 KV Grd Y/ 3.98 KV, 55/65°C RISE.
CLASS ONAN/ONAF/ONAF

CSA | PURCHASE ORDER No. 9000017832

SIEMENS
Siemens Transformadores S.A.de C.V.

ACCESSORIES ONE

| DATE: NOV/25/10 | D.R.: ISAAC G. | DRAWING No. | REV. |
|---|---|---|---|
| ACOT.: NONE | CH.: JESUS G. | D- 82 07 | 6 |
| SCALE: NONE | APP.: EDUARDO G. | | |

T-DRW-NI-001/2.03

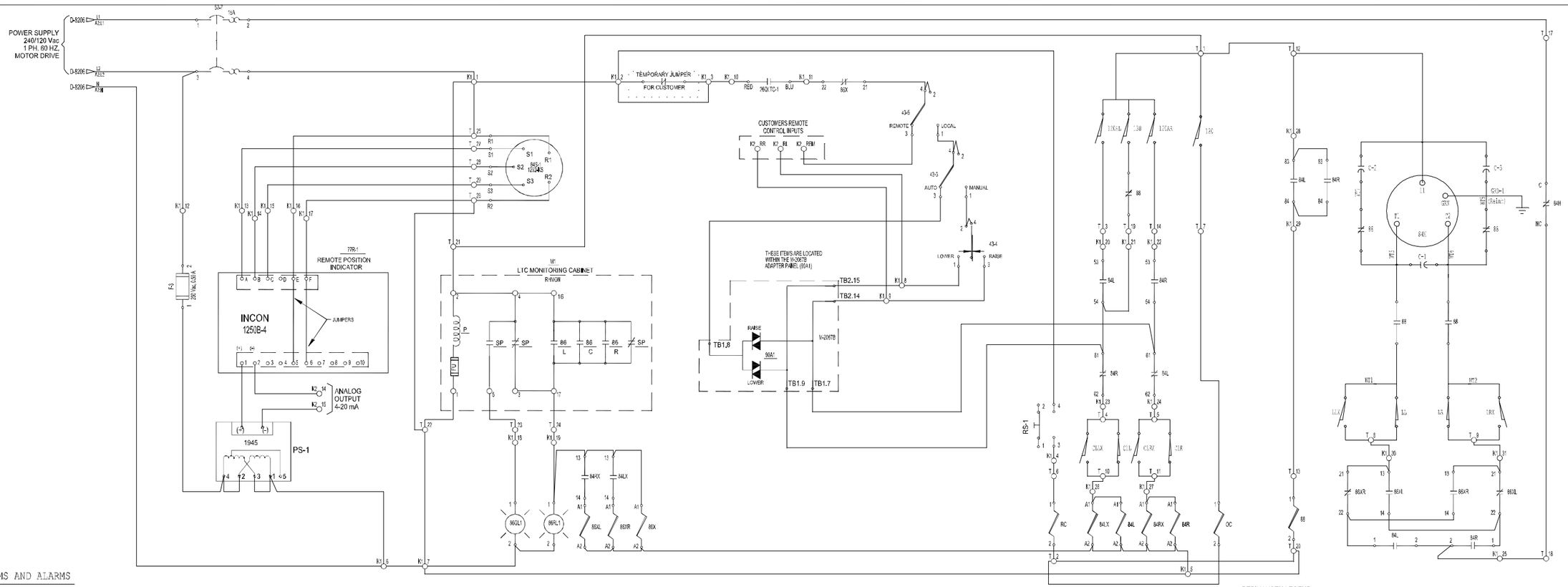


## REINHAUSEN CAMS AND ALARMS

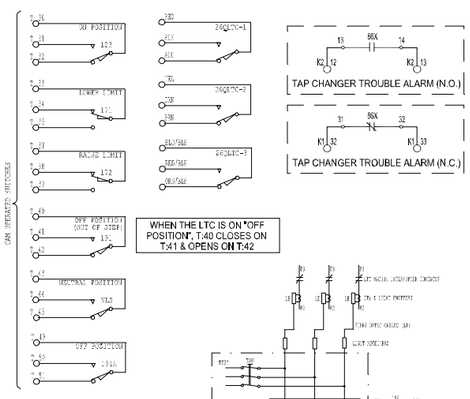


## LTC MONITORING CONTROL SWITCH

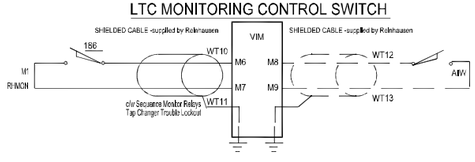


| DEVICE NUMBER | ACCESSORY | RATING | MODEL | MANUFACTURER |
|---|---|---|---|---|
| 52-7 | BREAKER | 240 Vac, 16.0 A. | 5SX12167 | SIEMENS |
| | 2 POLE THERMAL MAGNETIC BREAKER, 240Vac, 16A. | | | |
| 84L...84R | CONTACTOR | 23.0 A (Contacts-AC3 Duty) | 100-C23D10 | ALLEN BRADLEY |
| | MOTOR CONTACTOR 3P WITH 1 N/O CONTACT (120 VAC "COIL") | | | |
| ADDITION | RELAY | 4 POLES | 700-FA22 | ALLEN BRADLEY |
| | INSTANTANEOUS AUX. CONTACT BLOCK 2 N/O + 2 N/C CONTACTS | | | |
| 84LX...84RX | AUXILIARY RELAY | 120 Vac (Coil), 10.0 A | 700-CF220D | ALLEN-BRADLEY |
| | AUX. RELAY 2 N/0 & 2 N/C CONTACTS 120 Vac (Coil) | | | |
| 86XL...86XR | AUXILIARY RELAY | 120 Vac (Coil), 10.0 A | 700-CF220D | ALLEN-BRADLEY |
| 86X. | AUX. RELAY 2 N/0 & 2 N/C CONTACTS 120 Vac (Coil) | | | |
| 86GL1 | LAMP | 120 Vac | RPNL-1074-OAG | LEDTRONICS |
| | INDICATING LAMP GREEN | | | |
| 86RL1 | LAMP | 120 Vac | RPNL-1074-OUR | LEDTRONICS |
| | INDICATING LAMP RED | | | |
| 84S-1 | MONITOR | 117 Vac (Supply Voltage) | 1292-KS | INCON |
| | SYNCHRO TRANSMITTER | | | |
| 90A1 | REGULATOR | 120VAC | M-2001C-6SV | BECKWITH |
| | DIGITAL TAPCHANGER CONTROLLER (AUTO VOLTAGE REGULATION) | | | |
| ADDITION | Adapter Panel | | M-2067B | BECKWITH |
| | ADAPTER PANEL M-2067B | | | |
| A2 | TERMINAL BLOCK | 600 Vac, 175.0 A | 1421572 | MARATHON |
| | POWER STUD BLOCK 1- POLE (STUD-STUD) | | | |
| M1 | MONITOR | Tap Changer Trouble Lockout | RHMON | REINHAUSEN |
| | REINHAUSEN LTC MONITORING CABINET(MONITORS THE VACUUM INTERRUPTERS) | | | |
| RS-1 | SWITCH | 250 Vac, 3.0 A | 800T-A2A | ALLEN BRADLEY |
| | TEMPORARY CONTACT | | | |
| A2 | TERMINAL BLOCK | 600 Vac, 175.0 A | 1423572 | MARATHON |
| | POWER STUD BLOCK 3- POLE (STUD-STUD) | | | |
| 77R-1 | MONITOR | 4 to 20 mA (Analog Output) | 1250B-4-120 | INCON |
| | PROGRAMABLE POSITION INDICATOR (4-20 mA ) DIGITAL | | | |
| PS-1 | POWER SUPPLY | 120/240 VAC- 15 VDC | 1945 | INCON |
| | REGULATED POWER SUPPLY OF 15 VDC | | | |
| K1..2 | TERMINAL BLOCK | 50.0 A | UT 6 | PHOENIX CONTACT |
| | TERMINAL BLOCKS (UL 94 V0, #24 - 8 AWG) | | | |

| DEVICE NUMBER | ACCESSORY | RATING | MODEL | MANUFACTURER |
|---|---|---|---|---|
| F-3 | FUSE | 250 Vac, 0.50 A | FRN-R-0.5 | BUSSMAN |
| | DOUBLE ELEMENT FUSE WITH TIME DELAY | | | |
| ADDITION | FUSE BASE | 250 Vac, 30 A | R25030-1SR | BUSSMAN |
| | FUSES BASE 1 POLE | | | |
| 43-3 | SWITCH | 600 Vac, 10.0 A (Contacts) | KS11FBH2 | SQUARE D |
| | SELECTOR SWITCH 2 POS. MAINTAINED, CLASS 9001 | | | |
| 43-4 | SWITCH | 600 Vac, 10.0 A (Contacts) | KS53FBH2 | SQUARE D |
| | SELECTOR SWITCH 2 POS. SPRING RETURN TO CENTRE,CAM " C",OPERATOR ONLY | | | |
| 43-5 | SWITCH | 600 Vac, 10.0 A (Contacts) | KS11FBH2 | SQUARE D |
| | SELECTOR SWITCH 2 POS. MAINTAINED, CLASS 9001 | | | |

43-3 (MANUAL-AUTO)

| CONTACTS | POSITION MANUAL | POSITION AUTO |
|---|---|---|
| 1—2 | | |
| 3—4 | | |
| 5—6 | | |
| 7—8 | | |

43-4 (LOWER-OFF-RAISE)

| CONTACTS | POSITION LOWER | POSITION OFF | POSITION RAISE |
|---|---|---|---|
| 1—2 | | | |
| 3—4 | | | |
| 5—6 | | | |
| 7—8 | | | |

43-5 (LOCAL-REMOTE)

| CONTACTS | POSITION LOCAL | POSITION REMOTE |
|---|---|---|
| 1—2 | | |
| 3—4 | | |
| 5—6 | | |
| 7—8 | | |

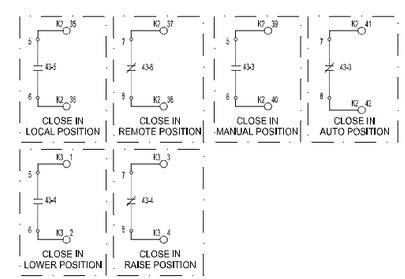


REFERENCE DWGS: D-8206,D-8209,D-8211,D-8212,D-8213.

NOTE:
- ☐ CHANGE INDICATED BY CUSTOMER.
- △ CHANGE MADE BY SIEMENS.
- THE NUMBER INDICATE THE REVISION.

REINHAUSEN LEGEND

71Q-LTC LIQUID LEVEL GAUGE; SUPPLIED BY REINHAUSEN, MOUNTED ON LTC TANK WALL.
84H HANDCRANK SAFETY INTERLOCK SWITCH; LOCATED IN REINHAUSEN MOTOR DRIVE.
84M LTC DRIVE MOTOR: LOCATED IN THE REINHAUSEN MOTOR DRIVE ASSEMBLY.
86 SEQUENCE MONITOR RELAYS; LEFT(L), CENTER(C), RIGHT(R), INSIDE MONITORING CABINET.
88 DYNAMIC BRAKING RELAY: MOUNTED IN THE REINHAUSEN MOTOR DRIVE.
120. CAM OPERATED SWITCHES; NORMALLY CLOSED, "OPENS" ON ALL TAP POSITIONS,
120AL. 120AR. 130 LOCATED IN REINHAUSEN MOTOR DRIVE.
123 CAM OPERATED SWITCH; LOCATED IN MOTOR DRIVE, SHOWN WHEN TAP CHANGER IS ON POSITION, CHANGE-OVER OCCURS WHEN TAP CHANGER IS IN MOTION.
171 CAM OPERATED SWITCH; LOCATED IN MOTOR DRIVE, SHOWN WHEN TAP CHANGER IS NOT ON LOWER LIMIT POSITION. CHANGEOVER OCCURS WHEN TAP CHANGER HAS REACHED THE LOWER LIMIT POSITION.
172 CAM OPERATED SWITCH; LOCATED IN MOTOR DRIVE, SHOWN WHEN TAP CHANGER IS NOT ON RAISE LIMIT POSITION. CHANGEOVER OCCURS WHEN TAP CHANGER HAS REACHED THE RAISE LIMIT POSITION.
186 MONITORING CONTROL SWITCH; LOCATED IN REINHAUSEN MOTOR DRIVE.
191 CAM OPERATED SWITCH; LOCATED IN MOTOR DRIVE, SHOWN WHEN TAP CHANGER IS ON POSITION, CHANGE-OVER OCCURS WHEN TAP CHANGER IS IN MOTION.
C-1, C-2, C-3 MOTOR CONTROL CAPACITORS; LOCATED IN REINHAUSEN MOTOR DRIVE.
CLL. CAM OPERATED SWITCHES; NORMALLY CLOSED, "OPENS" ON TAP POSITION 16L
LL LOWER LIMIT, LOCATED IN REINHAUSEN MOTOR DRIVE.
CLR. CAM OPERATED SWITCHES: NORMALLY CLOSED, "OPENS" ON TAP POSITION 16R
LR RAISE LIMIT, LOCATED IN REINHAUSEN MOTOR DRIVE.
CLLX. CAM OPERATED SWITCHES: NORMALLY CLOSED, "OPENS" ON ALL TAP POSITIONS.
LLX, LRX CLRX, LOCATED IN REINHAUSEN MOTOR DRIVE.
NLS CAM OPERATED SWITCH; SHOWN WHEN TAP CHANGER IS ON NEUTRAL POSITION. LOCATED IN REINHAUSEN MOTOR DRIVE.
P LTC MONITORING CABINET POWER SUPPLY.
RC TAP POSITION DRAG HAND RESET COIL; C/W MANUAL RESET SWITCH BESIDE DIAL PLATE.
SP SUPERVISORY POWER, CHANGE-OVER OCCURS WHEN MONITORING CABINET IS POWERED-UP.
T TERMINAL BLOCK, CINCH #142 SERIES 250 Vac, 30.0 A, Barrier Blocks.
86T CONNECTION POINT FOR CUSTOMERS REMOTE LTC LOCKOUT RELAY
OC NON-RE-SETTABLE OPERATION COUNTER.

REVISIONS

REV. 1
ADDED: LEGENDS TO (191).
JAN/31/11 ISAAC.
REV. 2
MODIFIED: LEGENDS (77R-1).
MARCH/07/11 ISAAC.
REV. 3
A) MODIFIED: CONNECTIONS ACCORDING THE SUPPLIER DRAWING.
MAY/30/11 ISAAC.
REV. 4
MODIFIED: THE EQUIPMENT TAG.
AUGUST/29/11 ISAAC.

TRANSCANADA PIPELINES LIMITED
PIAPOT PUMPING STATION EQUIPMENT TAG:127-PIAPT-B0-T-01 R4

OIL IMMERSED SUBSTATION POWER TRANSFORMER, 3 PHASE, 20/22.4/28.66/29.86/33.33/37.33 MVA, 60 HZ.
HV 230 KV DELTA, LV 6.9 KV Grd Y/ 3.98 KV, 55/65°C RISE.
CLASS ONAN/ONAF/ONAF

CSA PURCHASE ORDER No. 9000017832

T-04/01/01/02.03

**SIEMENS**
Siemens Transformadores S.A.de C.V.

SCHEMATIC
MOTOR DRIVE

| | | | |
|---|---|---|---|
| DATE: NOV/25/10 | DR: ISAAC G. | DRAWING No. | REV. |
| ACOT.: NONE | CH.: JESUS G. | D-8208 | 4 |
| SCALE: NONE | APP.: EDUARDO G. | | |


SIEMENS Siemens Energy Inc. Oil & Gas
TransCanada Pipeline
Doc Number SEI-KXL-TXF-0138-PIAPT
Release 7
Issued by Mainda Pitts

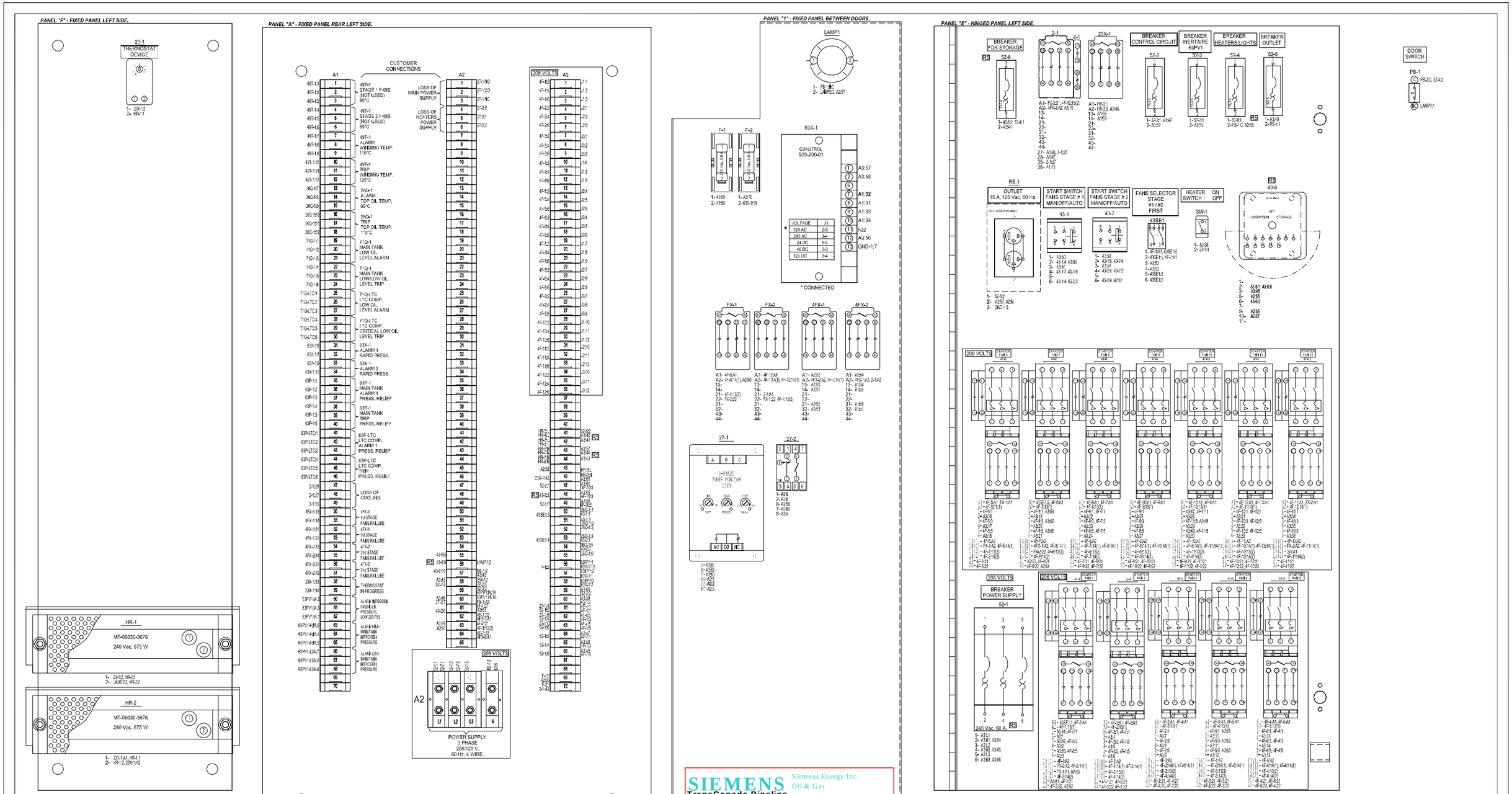


NOTES:

1) CONTROL & POWER WIRES: TYPE SIS (INSULATION: XLP AND VW-1), 600 VOLTS, 90°C (INSIDE CONTROL CABINET).
2) INSTRUMENTS & TC(S) CABLES: TYPE SIS (INSULATION: PVC AND VW-1). 600 VOLTS, 90°C (OUTSIDE CONTROL CABINET).
3) HEATER CIRCUIT WIRING: INSULATION EXTRUDED ETFE (TEFTZEL) 149°C. 600 V. ABRASION-RESISTANT.
4) ALL WIRING TERMINATIONS WILL BE IDENTIFIED BY PRINTED LABELS ON FLAME-RESISTANT HEAT SHRINK CONDUCTOR IDENTIFICATION SLEEVES.
5) RUN WIRING FROM ACCESSORY DEVICES IN RIGID GALVANIZED CONDUIT, EXCEPT FOR SHORT LENGTHS.
6) #14 AWG WIRE MINIMUM SIZE FOR LOW VOLTAGE CONTROL AND POWER.
7) #10 AWG WIRE FOR CURRENT TRANSFORMERS SECONDARY CIRCUITS.
8) COMPONENTS AND LABELS TO BE MOUNTED IN LOCATIONS AS SHOWN ON DRAWINGS.
9) CONTROL TERMINAL BLOCKS: PHOENIX # 3044131, 1 POLE, 50.0 A, 600 Vac, AND # 1423572 3 POLES, #1421572 1 POLE, 600V 175 A, MARATHON, TO POWER SUPPLY & # SAKB 10C, 1 POLE, 47.0 A, 600 Vac SHORT-CIRCUITING TYPE, WEIDMULLER FOR CTS
10) ALL WIRING SHALL BE NEATLY BUNDED, SECURED, AND PROTECTED AGAINST CONTAC WITH ANY SHARP METAL EDGES.

NOTE:
- ☐ CHANGE INDICATED BY CUSTOMER.
- △ CHANGE MADE BY SIEMENS.
- THE NUMBER INDICATE THE REVISION.

REFERENCE DWGS: D-8206,D-8207.

REVISIONS

REV. 1
MODIFIED: CONNECTIONS (4FX-1:31,32, 4FX-2:31,32,A1:31,32,52,53,56,57).
MARCH/07/11 ISAAC.
REV. 2
A) MODIFIED: CONNECTIONS (A3:47..49, A3:64..66,4F-1..12).
B) LEYENDS (208 VOLTS).
C) LEYENDS (A1:35..46, A1:25..30).
MAY/30/11 ISAAC.
REV. 3
MODIFIED:CONNECTIONS (HR-2,A3:45..46, A2:58,60,23X-1).
JUNE/15/11 ISAAC.
REV. 4
MODIFIED: THE EQUIPMENT TAG.
AUGUST/29/11 ISAAC.
REV. 5
MODIFIED: THE CONNECTIONS (A2:55,56,57,A3:41..44,48,52-4),ADDED: (52-8,43-6).
NOVEMBER/03/11 ISAAC.

TRANSCANADA PIPELINES LIMITED

PIAPOT PUMPING STATION — EQUIPMENT TAG:127-PIAPT-B0-T-01

OIL IMMERSED SUBSTATION POWER TRANSFORMER, 3 PHASE, 20/22.4/26.66/29.86/33.33/37.33 MVA, 60 HZ. HV 230 KV DELTA, LV 6.9 KV Grd Y/ 3.98 KV, 55/65°C RISE. CLASS ONAN/ONAF/ONAF

CSA | PURCHASE ORDER No. 9000017832

SIEMENS
Siemens Transformadores S.A.de C.V.

CONTROLS LAYOUT CONNECTIONS LEFT COMPARTMENT

| | | | |
|---|---|---|---|
| DATE: NOV/25/10 | D.R.: ISAAC C. | DRAWING No. D-8210 | REV. 5 |
| ACOT.: NONE | CH.: JESUS G. | | |
| SCALE: NONE | APP.: EDUARDO G. | | |

T-DIM-001992-03

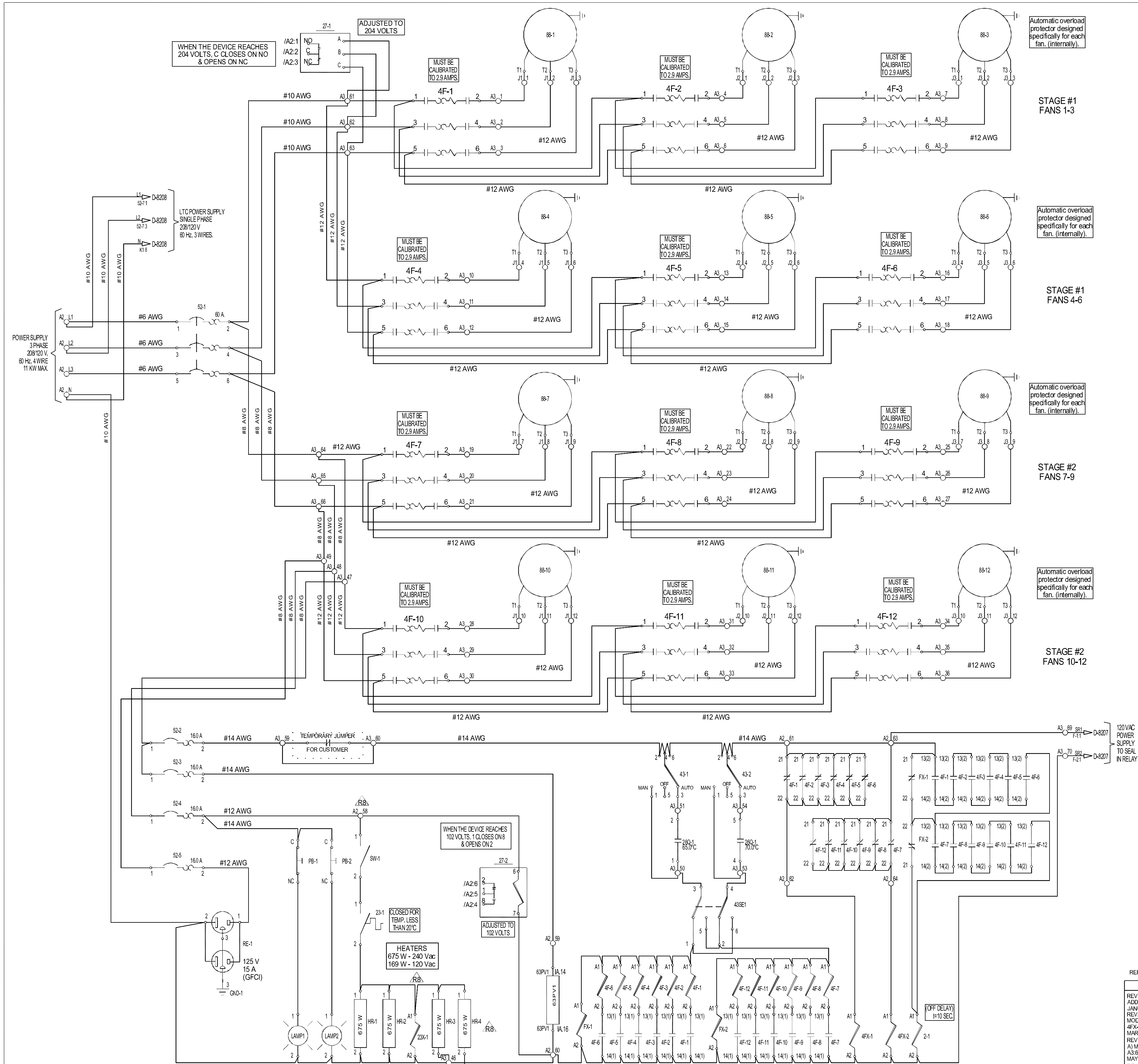


| DEVICE NUMBER | ACCESSORY | RATING | MODEL | MANUFACTURER |
|---|---|---|---|---|
| A2 | TERMINAL BLOCK | 600 Vac, 175.0 A | 1423572 | MARATHON |
| | POWER STUD BLOCK 3- POLE (STUD-STUD) | | | |
| A2 | TERMINAL BLOCK | 600 Vac, 175.0 A | 1421572 | MARATHON |
| | POWER STUD BLOCK 1- POLE (STUD-STUD) | | | |
| 52-1 | BREAKER | 240 Vac, 60 A. | ED23B060 | SIEMENS |
| | 3 POLE THERMAL MAGNETIC BREAKER, 125 AMP FRAME SIZE, 10 kA @ 240 V. | | | |
| 52-2...5 | BREAKER | 240 Vac, 16.0 A. | 5SX21167 | SIEMENS |
| | 1 POLE THERMAL MAGNETIC BREAKER, 10 kA @ 24 to 440 Vac & 24 to 60 Vdc. | | | |
| RE-1 | OUTLET | 125 Vac, 15.0 A | 8599-I | LEVITON |
| | CONVENIENCE OUTLET GFCI 125 V, 15.0 A | | | |
| GND-1 | GROUND BAR | 15 Holes Compression Clamp | D-06/013 | SIGto |
| | GROUND BAR EXTRUDED COPPER (PLAIN & UNFINISHED) | | | |
| PB-1...2 | SWITCH | 250 Vac, 3.0 A | 8411K7 | CUTLER-HAMMER |
| | DOOR OPERATING SWITCH | | | |
| LAMP1...2 | LAMP | 120 Vac | 41026 | G.E. |
| | INCANDESCENT LIGHT (60 WATTS) | | | |
| ADDITION | LAMP BASE | 100 W, GRAY | 604-19 | LEGRAND |
| | BASE LAMP TO STANDARD INCANDESCENT LAMP | | | |
| SW-1 | TOGGLE SWITCH | 250 Vac, 10.0 A | 7500K14 | CUTLER-HAMMER |
| | TOGGLE SWITCH SPST | | | |
| 23-1 | THERMOSTAT | 10.0 A @ 120 Vac | A-TEMNC | HOFFMAN |
| | ADJUSTABLE THERMOSTAT (-1.11 A 60.0°C), (30 TO 140°F) N.C. SWITCH | | | |
| HR-1...4 (R8) | HEATER | 240 Vac, 675 W | MT-06030-3676 | OGDEN |
| | HEATER (3" WIDE), RATED @ 240 VAC BUT CONNECTED @ 120 VAC. (168.75W). | | | |
| 43-1...2 | SWITCH | 600 Vac, 10.0 A (Contacts) | KS46FBH2 | SQUARE D |
| | SELECTOR SWITCH 3 POS. MAINTAINED, WITH 2 KA1 CAM SWITCH | | | |
| 2-1 | AUXILIARY CONTACTOR | 120 Vac,10.0 A | 3RH1122-1AK60 | SIEMENS |
| | AUXILIARY CONTACTOR, 2 N/0 & 2 N/C CONTACTS , Size S00 | | | |
| ADDITION | RELAY | Off-Delay Module 5 to 100 sec. | 3RT1916-2FK31 | SIEMENS |
| | TIME DELAY CONTACT BLOCK 1 N/O + 1 N/C CONTACT 5-100 sec OFF DELAY | | | |
| 88-1...12 | MOTOR FAN | 208/230 Vac, 2.3 A (nameplate) | F26-A8683-3 | KRENZ-VENT |
| | MOTOR FAN 3 POLES, 1/2 HP, 1750 RPM | | | |
| 4F-1... 12 | STARTER | 2.5-4.0A, 65kA rms | 190E-AND2-CB40C | ALLEN BRADLEY |
| | MODULAR STARTER WITH PROTECTOR, CONTACTOR AND AUX. CONTACTS (2.5..4.0 A, 110..120 Vac, 60Hz) | | | |
| FX-1...2 | AUXILIARY RELAY | 120 Vac (Coil), 10.0 A | 700-CF220D | ALLEN-BRADLEY |
| | AUX. RELAY 2 N/0 & 2 N/C CONTACTS 120 Vac (Coil) | | | |
| A1...3 | TERMINAL BLOCK | 50.0 A | UT 6 | PHOENIX CONTACT |
| | TERMINAL BLOCKS (UL 94 V0, #24 - 8 AWG) | | | |
| 4FX-1..2 | AUXILIARY RELAY | 120 Vac (Coil), 10.0 A | 700-CF220D | ALLEN-BRADLEY |
| | AUX. RELAY 2 N/0 & 2 N/C CONTACTS 120 Vac (Coil) | | | |
| J1...4 | TERMINAL BLOCK | 50.0 A | UT 6 | PHOENIX CONTACT |
| | TERMINAL BLOCKS (UL 94 V0, #24 - 8 AWG) | | | |
| 49T-1 | GAUGE | 125 Vdc (Contacts) | TR6000-00022972 | QUALITROL |
| | WINDING TEMP. INDICATOR (ANALOG) 4 FORM C SWITCHES | | | |
| 63PV1 | NITROGEN SYSTEM | 0.50 A Non-Inductive (Contact) | RNC2 | ABB |
| | INERTAIRE OIL PRESERVATION SYS. HIGH/LOW PRESSURE & EMPTY CYLINDER ALARM SWS | | | |
| 23X-1 | AUXILIARY RELAY | 120 Vac (Coil), 10.0 A | 700-CF220D | ALLEN-BRADLEY |
| | AUX. RELAY 2 N/0 & 2 N/C CONTACTS 120 Vac (Coil) | | | |
| 27-1 | VOLT. MONITOR | 170-240/210-280 Vac ADJT. | B269 | TIMEMARK |
| | DETECTS PHASE LOSS,REVERSAL, UNDER AND OVER VOLTAGE, 208/240 Vac. | | | |
| 27-2 | VOLT. MONITOR | 80 to 130 Vac (COIL) | AC260B-80-130 | TIMEMARK |
| | DETECTS OVER OR UNDER VOLTAGE COMPLETE 8-PIN OCTAL, 80 to 130 Vac. I PH. | | | |
| ADDITION | OCTAL SOCKET | | 51X120-1 | TIME MARK |
| | 8-PIN OCTAL SOCKET | | | |

R8

**SIEMENS** Siemens Energy Inc. Oil & Gas
**TransCanada Pipeline**
**Doc Number** SEI-KXL-TXF-0138-PIAPT
**Release** 7
**Issued by** Mainda Pitts

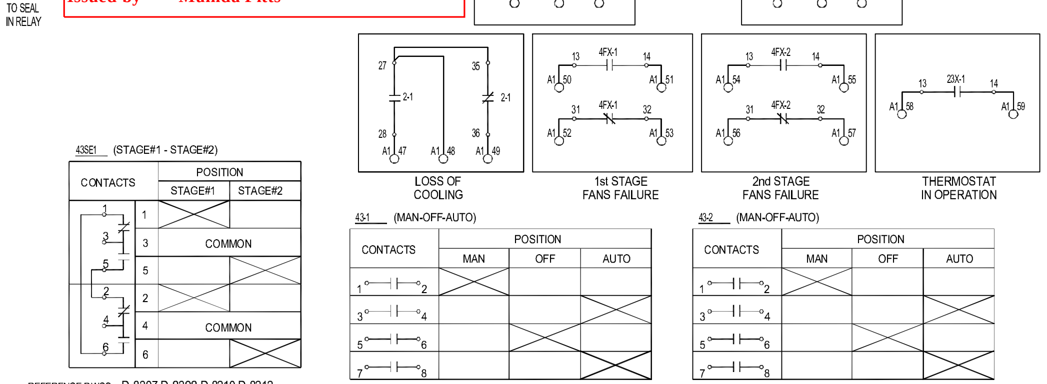


REFERENCE DWGS: D-8207,D-8208,D-8210,D-8212.

NOTE:
- □ CHANGE INDICATED BY CUSTOMER.
- △ CHANGE MADE BY SIEMENS.
- THE NUMBER INDICATE THE REVISION.

**REVISIONS**

REV. 1
ADDED: LEGENDS TO (27-1..2).
JAN/31/11 ISAAC.
REV. 2
MODIFIED: CONNECTIONS (4FX-1:31,32, 4FX-2:31,32,A1:52,53,56,57).
MARCH/07/11 ISAAC.
REV. 3
A) MODIFIED: CONNECTIONS (A3:47..49, A3:64..66,4F-1..12).
MAY/30/11 ISAAC.
REV. 4
DELETE: HR-3,4, MODIFIED:CONNECTIONS (A3:45..46,23X-1), ADDED: HR-3 AND LEGEND.
JUNE/15/11 ISAAC.
REV. 5
MODIFIED: THE EQUIPMENT TAG.
AUGUST/29/11 ISAAC.
REV. 6
MODIFIED: THE CONNECTIONS (A2:55,56,57,A3:41 ...44,48,52-4,WIRES SIZE),LEGENDS: (52-1),ADDED: (52-8,43-6,HR-4...HR-7 AND LEGENDS).
NOVEMBER/03/11 ISAAC.
REV. 7
MODIFIED: THE CONNECTIONS (A2:55..57,A3:41 ..44,48,WIRES SIZE),LEGEND: (52-1,RE-1),DELETE: (52-8,43-6,HR-4...HR-7 AND LEGENDS).
JANUARY/18/11 ISAAC.
REV. 8
MODIFIED: THE CONNECTIONS (A2:58,A3:45,46), MODEL: (HR-3..4), LEGEND: (HR-1..4,), DELETE: LEGEND (HR-3).
04/MAY/12 ISAAC.

T.040N.001092.03

TRANSCANADA PIPELINES LIMITED
PIAPOT PUMPING STATION EQUIPMENT TAG:127-PIAPT-B0-T-01
OIL IMMERSED SUBSTATION POWER TRANSFORMER, 3 PHASE, 20/22.4/26.66/29.86/33.33/37.33 MVA, 60 HZ.
HV 230 KV DELTA, LV 6.9 KV Grd Y/ 3.98 KV, 55/65°C RISE.
CLASS ONAN/ONAF/ONAF

CSA | PURCHASE ORDER No. 9000017832

**SIEMENS**
Siemens Transformadores S.A.de C.V.

SCHEMATIC, CONTROL COOLING

| DATE: | NOV/25/10 | D.R.: | ISAAC G. | DRAWING No. | REV. |
|---|---|---|---|---|---|
| ACOT.: | NONE | CH.: | JESUS G. | D- 8206 | 8 |
| SCALE: | NONE | APP.: | EDUARDO G. | | |

| DEVICE NUMBER | ACCESSORY | RATING | MODEL | MANUFACTURER |
|---|---|---|---|---|
| SCS-1 | SWITCH | 30 A | 202-C | STATES |
| | SHORTING SWITCH W/TEST PLUG | | | |
| ACT-1 | BECKWITH | IN 5 A 8.66 - OUT 0.2 A, 5VA | M-0169A | BECKWITH |
| | AUXILIARY CURRENT TRANSFORMER UNIT (INPUT 5 A 8.66 A OUTPUT 0.2 A) 5VA | | | |
| 90A1 | REGULATOR | 120VAC | M-2001C-6SV | BECKWITH |
| | DIGITAL TAPCHANGER CONTROLLER (AUTO VOLTAGE REGULATION) | | | |
| ADDITION | Adapter Panel | | M-2067B | BECKWITH |
| | ADAPTER PANEL M-2067B | | | |
| GND-1 | GROUND BAR | 15 Holes Compression Clamp | D-06/013 | SIGto |
| | GROUND BAR EXTRUDED COPPER (PLAIN & UNFINISHED) | | | |
| K1...2 | TERMINAL BLOCK | 50.0 A | UT 6 | PHOENIX CONTACT |
| | TERMINAL BLOCKS (UL 94 V0, #24 - 8 AWG) | | | |
| 52-6 | BREAKER | 240 Vac, 16.0 A. | 5SX21167 | SIEMENS |
| | 1 POLE THERMAL MAGNETIC BREAKER, 10 kA @ 24 to 440 Vac & 24 to 60 Vdc. | | | |

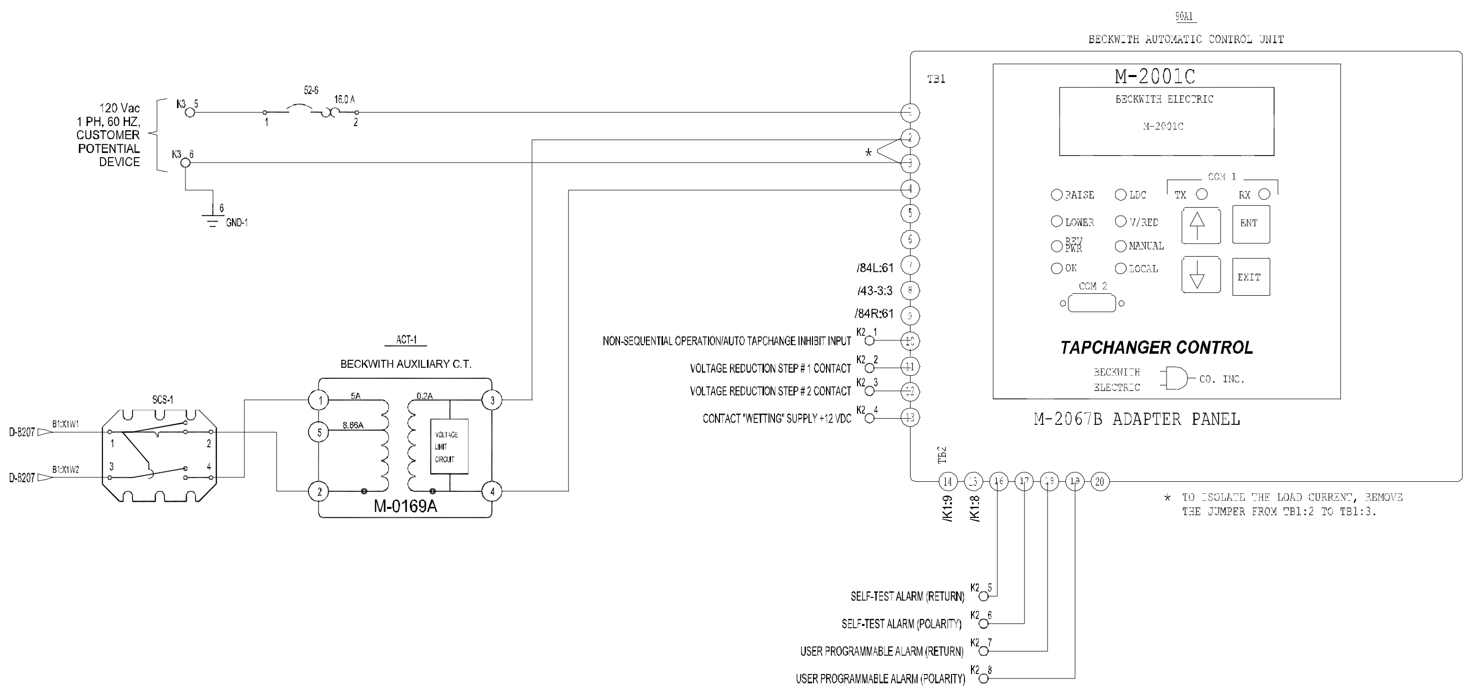


SIEMENS Siemens Energy Inc. Oil & Gas
TransCanada Pipeline
Doc Number SEI-KXL-TXF-0138-PIAPT
Release 7
Issued by Mainda Pitts

REFERENCE DWGS: D-8207,D-8208,D-8211,D-8212,D-8213.

NOTE:
- ☐ CHANGE INDICATED BY CUSTOMER.
- △ CHANGE MADE BY SIEMENS.
- THE NUMBER INDICATE THE REVISION.

REVISIONS
REV. 1
MODIFIED: THE EQUIPMENT TAG.
AUGUST/29/11 ISAAC.

T.040N.001092.03

TRANSCANADA PIPELINES LIMITED
PIAPOT PUMPING STATION EQUIPMENT TAG:127-PIAPT-B0-T-01 R1
OIL IMMERSED SUBSTATION POWER TRANSFORMER, 3 PHASE, 20/22.4/26.66/29.86/33.33/37.33 MVA, 60 HZ.
HV 230 KV DELTA, LV 6.9 KV Grd Y/ 3.98 KV, 55/65°C RISE.
CLASS ONAN/ONAF/ONAF
CSA | PURCHASE ORDER No. 9000017832

SIEMENS
Siemens Transformadores S.A.de C.V.

AUTO CONTROL

| DATE: | NOV/25/10 | D.R.: | ISAAC G. | DRAWING No. | REV. |
|---|---|---|---|---|---|
| ACOT.: | NONE | CH.: | JESUS G. | D-8209 | 1 |
| SCALE: | NONE | APP.: | EDUARDO G. | | |

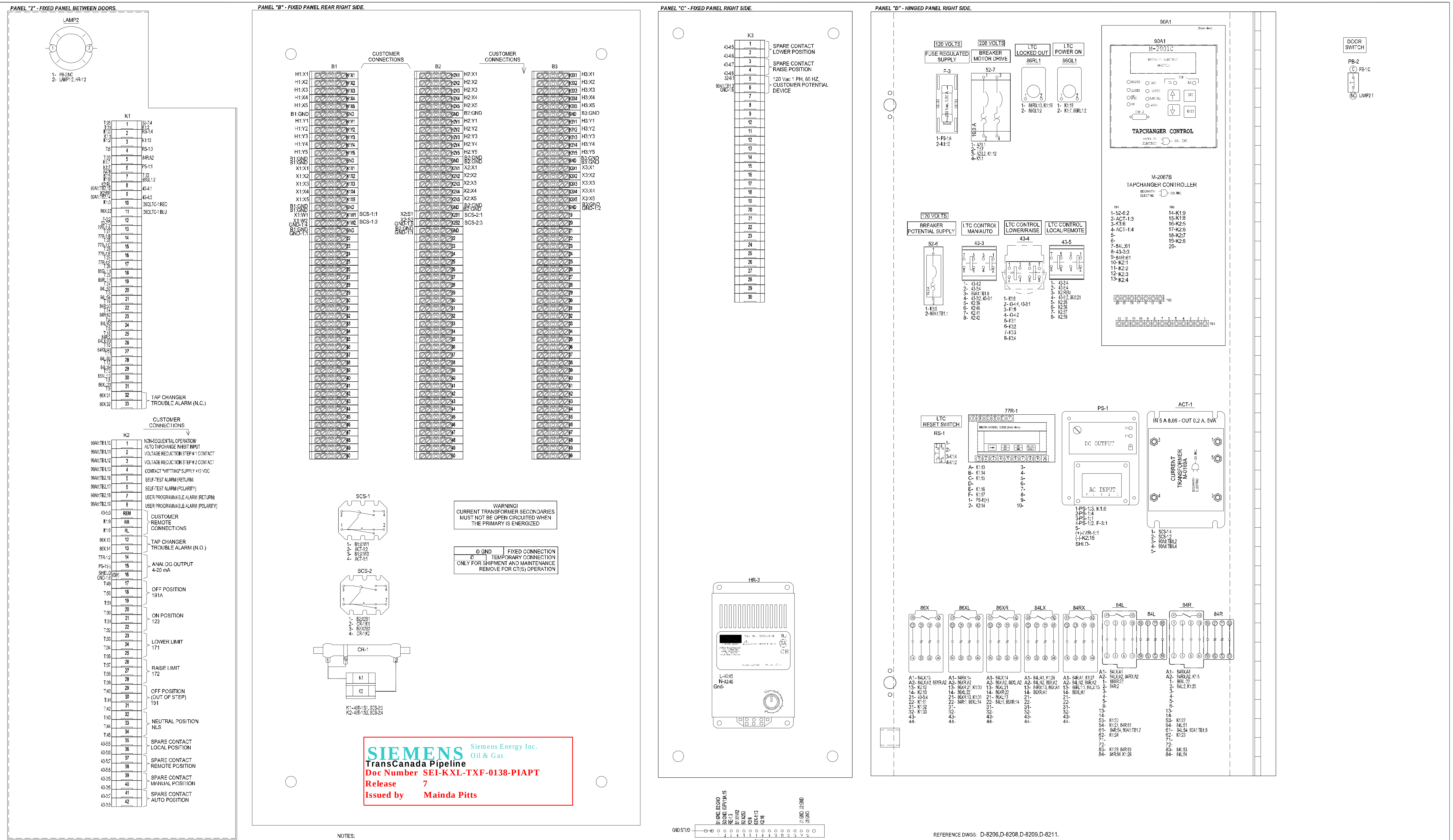


SIEMENS Siemens Energy Inc. Oil & Gas
TransCanada Pipeline
Doc Number SEI-KXL-TXF-0138-PIAPT
Release 7
Issued by Mainda Pitts

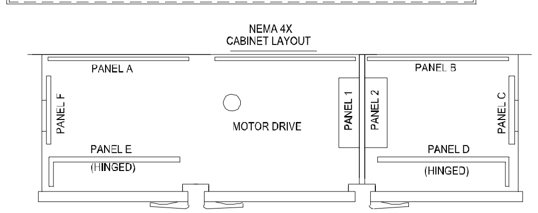


NOTES:

1) CONTROL & POWER WIRES: TYPE SIS (INSULATION: XLP AND VW-1), 600 VOLTS, 90°C (INSIDE CONTROL CABINET).
2) INSTRUMENTS & TC(S) CABLES: TYPE SIS (INSULATION: PVC AND VW-1), 600 VOLTS, 90°C (OUTSIDE CONTROL CABINET).
3) HEATER CIRCUIT WIRING: INSULATION EXTRUDED ETFE (TEFTZEL) 149°C, 600 V, ABRASION-RESISTANT.
4) ALL WIRING TERMINATIONS WILL BE IDENTIFIED BY PRINTED LABELS ON FLAME-RESISTANT HEAT SHRINK CONDUCTOR IDENTIFICATION SLEEVES.
5) RUN WIRING FROM ACCESSORY DEVICES IN RIGID GALVANIZED CONDUIT, EXCEPT FOR SHORT LENGTHS.
6) #14 AWG WIRE MINIMUM SIZE FOR LOW VOLTAGE CONTROL AND POWER.
7) #10 AWG WIRE FOR CURRENT TRANSFORMERS SECONDARY CIRCUITS.
8) COMPONENTS AND LABELS TO BE MOUNTED IN LOCATIONS AS SHOWN ON DRAWINGS.
9) CONTROL TERMINAL BLOCKS; PHOENIX # 3044131, 1 POLE, 50.0 A, 600 Vac, AND # 1423572 3 POLES, #1421572 1 POLE, 600V 175 A, MARATHON, TO POWER SUPPLY & # SAKB 10C, 1 POLE, 47.0 A, 600 Vac SHORT-CIRCUITING TYPE, WEIDMULLER FOR CT'S
10) ALL WIRING SHALL BE NEATLY BUNDED, SECURED, AND PROTECTED AGAINST CONTAC WITH ANY SHARP METAL EDGES.

NOTE:
- □ CHANGE INDICATED BY CUSTOMER.
- △ CHANGE MADE BY SIEMENS.
- THE NUMBER INDICATE THE REVISION.

REFERENCE DWGS: D-8206,D-8208,D-8209,D-8211.

REVISIONS

REV. 1
A) MODIFIED: CONNECTIONS (K1..K2) ACCORDING THE SUPPLIER DRAWING.
MAY/30/11 ISAAC.
REV. 2
ADDED: HR-3.
JUNE/15/11 ISAAC.
REV. 3
MODIFIED: THE EQUIPMENT TAG.
AUGUST/29/11 ISAAC.

T.040N.001092.03

TRANSCANADA PIPELINES LIMITED
PIAPOT PUMPING STATION EQUIPMENT TAG:127-PIAPT-B0-T-01 R3

OIL IMMERSED SUBSTATION POWER TRANSFORMER, 3 PHASE, 20/22.4/26.66/29.86/33.33/37.33 MVA, 60 HZ.
HV 230 KV DELTA, LV 6.9 KV Grd Y/ 3.98 KV, 55/65°C RISE.
CLASS ONAN/ONAF/ONAF

| CSA | PURCHASE ORDER No. 9000017832 |
|---|---|

SIEMENS
Siemens Transformadores S.A.de C.V.

CONTROLS LAYOUT CONNECTIONS RIGHT COMPARTMENT

| DATE: | NOV/25/10 | D.R.: | ISAAC G. | DRAWING No. | REV. |
|---|---|---|---|---|---|
| ACOT.: | NONE | CH.: | JESUS G. | D-8212 | 3 |
| SCALE: | NONE | APP.: | EDUARDO G. | | |

AREA OF MOTOR DRIVE - PRE-WIRED REINHAUSEN MOTOR DRIVE UNIT

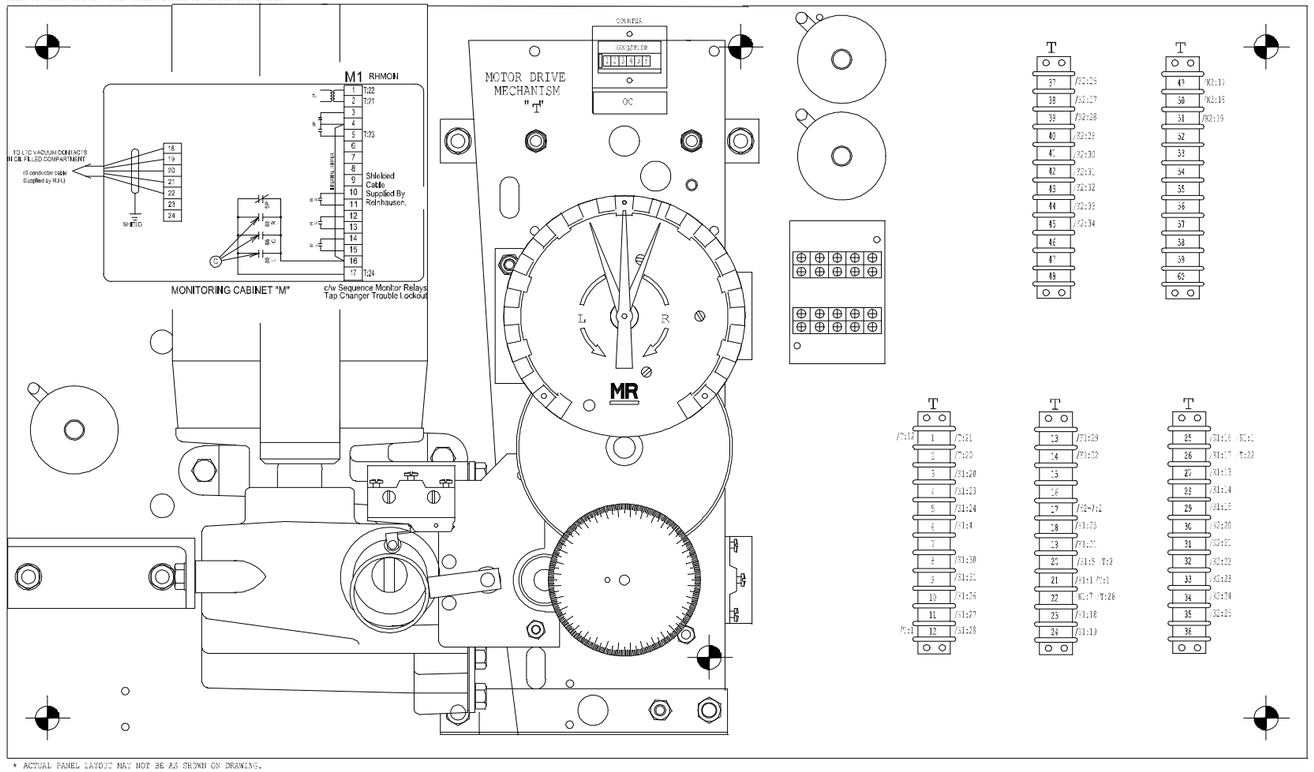


* ACTUAL PANEL LAYOUT MAY NOT BE AS SHOWN ON DRAWING.

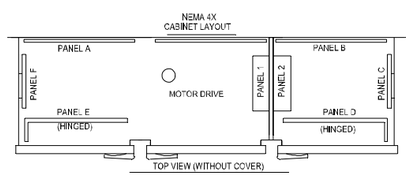


**CAUTION**

DO NOT HANDCRANK LTC WHILE TRANSFORMER IS ENERGIZED

NOTE: THIS WARNING LABEL IS TO BE MOUNTED NEXT TO THE HANDCRANK AT BOTTOM OF CABINET.

NOTES:

1) CONTROL & POWER WIRES; TYPE SIS (INSULATION: XLP AND VW-1). 600 VOLTS, 90°C (INSIDE CONTROL CABINET).
2) INSTRUMENTS & TC(S) CABLES; TYPE SIS (INSULATION: PVC AND VW-1). 600 VOLTS, 90°C (OUTSIDE CONTROL CABINET).
3) HEATER CIRCUIT WIRING INSULATION EXTRUDED ETFE (TEFTZEL) 149°C, 600 V, ABRASION-RESISTANT.
4) ALL WIRING TERMINATIONS WILL BE IDENTIFIED BY PRINTED LABELS ON FLAME-RESISTANT HEAT SHRINK CONDUCTOR IDENTIFICATION SLEEVES.
5) RUN WIRING FROM ACCESSORY DEVICES IN RIGID GALVANIZED CONDUIT, EXCEPT FOR SHORT LENGTHS.
6) #14 AWG WIRE MINIMUM SIZE FOR LOW VOLTAGE CONTROL AND POWER.
7) #10 AWG WIRE FOR CURRENT TRANSFORMERS SECONDARY CIRCUITS.
8) COMPONENTS AND LABELS TO BE MOUNTED IN LOCATIONS AS SHOWN ON DRAWINGS.
9) CONTROL TERMINAL BLOCKS: PHOENIX # 3044131, 1 POLE, 50.0 A, 600 Vac AND # 1423572 3 POLES, #1421572 1 POLE, 600V 175 A, MARATHON. TO POWER SUPPLY & # SAKB 10C, 1 POLE, 47.0 A, 600 Vac SHORT-CIRCUITING TYPE, WEIDMULLER FOR CT'S
10) ALL WIRING SHALL BE NEATLY BUNDED, SECURED, AND PROTECTED AGAINST CONTAC WITH ANY SHARP METAL EDGES.

**SIEMENS** Siemens Energy Inc. Oil & Gas

**TransCanada Pipeline**

**Doc Number SEI-KXL-TXF-0138-PIAPT**

**Release 7**

**Issued by Mainda Pitts**

REFERENCE DWGS: D-8208,D-8209,D-8213.

| REVISIONS |
|---|
| REV. 1<br>A) MODIFIED: CONNECTIONS ACCORDING THE SUPPLIER DRAWING.<br>MAY/30/11 ISAAC.<br>REV. 2<br>MODIFIED: THE EQUIPMENT TAG.<br>AUGUST/29/11 ISAAC. |

NOTE:
- ☐ CHANGE INDICATED BY CUSTOMER.
- △ CHANGE MADE BY SIEMENS.
- THE NUMBER INDICATE THE REVISION.

TRANSCANADA PIPELINES LIMITED

PIAPOT PUMPING STATION EQUIPMENT TAG:127-PIAPT-B0-T-01 R2

OIL IMMERSED SUBSTATION POWER TRANSFORMER, 3 PHASE, 20/22.4/25.66/29.86/33.33/37.33 MVA, 60 HZ.
HV 230 KV DELTA, LV 6.9 KV Grd Y/ 3.98 KV, 55/65°C RISE.
CLASS ONAN/ONAF/ONAF

CSA | PURCHASE ORDER No. 9000017832

T-QUM-001092-03

**SIEMENS**
Siemens Transformadores S.A.de C.V.

CONTROLS LAYOUT MOTOR DRIVE COMPARTMENT

| DATE: | NOV/25/10 | D.R.: | ISAAC G. | DRAWING No. | REV. |
|---|---|---|---|---|---|
| ACOT.: | NONE | CH.: | JESUS G. | D-8211 | 2 |
| SCALE: | NONE | APP.: | EDUARDO G. | | |

SPECIAL FEATURES: SOLDERED CI

NOTE: DIMENSIONS & USE OF INVERTED DOME APPLY TO VERSION V03 AND HIGHER. FOR DIMENSIONS OF PREVICUS VERSIONS, SEE REV. 2 OF THIS DWG.

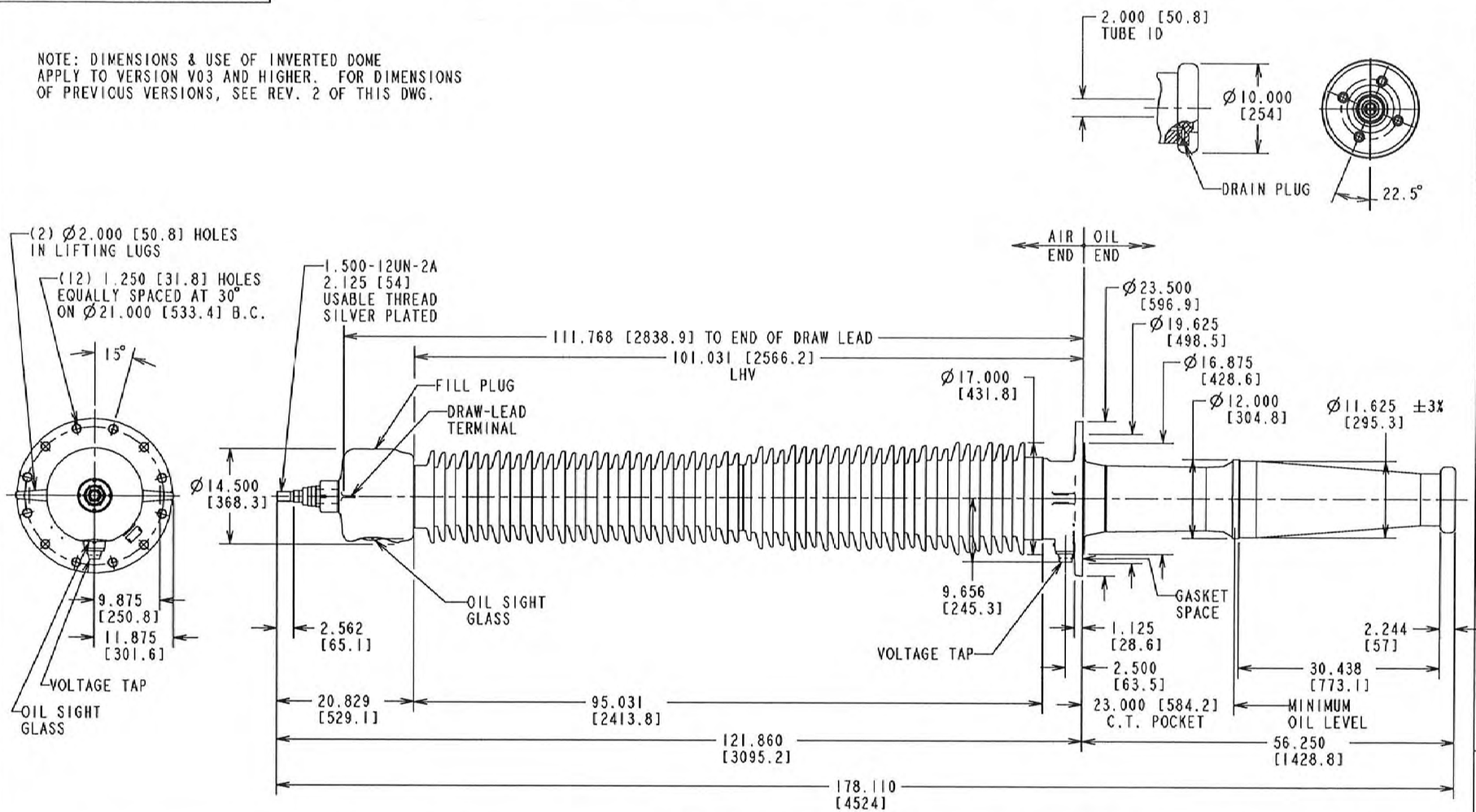


| STYLE NO. | CATALOG NO. | OUTER INSULATING ENVELOPE COLOR | INSULATION CLASS kV | BASIC IMPULSE LEVEL kV | MAX. LINE TO GROUND VOLTAGE kV | CONNECTION METHOD AND CONTINUOUS CURRENT A@60Hz | | | MINIMUM CREEP DISTANCE in. / [mm] | MINIMUM ARCING DISTANCE in. / [mm] | MAXIMUM ALTITUDE ft / [m] | MOUNTING ANGLE FROM VERTICAL deg | APPROX. WEIGHT lb / [kg] |
|---|---|---|---|---|---|---|---|---|---|---|---|---|---|
| | | | | | | DRAW-LEAD | INBOARD END | | | | | | |
| | | | | | | | TRANS. | O.C.B. | | | | | |
| 230W0800UT | N/A | GRAY | 230 | 1050 | 146 | 800 | N/A | N/A | 304.000 [7722] | 95.031 [2414] | 10000 [3048] | 0 TO 30 | 1272 [577.0] |
| 230X0800UT | N/A | BROWN | | | | | | | | | | | |

REVISIONS

| NO. & LOC. | | |
|---|---|---|
| 2 | CA55615--2, D-4A0512 REDRAWN ON CADD WITH DIMENSIONAL CORRECTIONS.CHG FLG SLOTS TO HOLES J.ARMIGER 06/05/02 L.BIBB 06/10/02 | |
| 3 | CA75855, D-4A0512 CONVERTED TO INVERTED DOME B.BASKINI1-08-04 | |

PRINTS TO:

| | | | | | |
|---|---|---|---|---|---|
| 1 | | 7 | | 13 | |
| 2 | | 8 | | 14 | |
| 3 | | 9 | | 15 | |
| 4 | | 10 | | 16 | |
| 5 | | 11 | | 17 | |
| 6 | | 12 | | 18 | |

REF:

ABB Inc.
ALAMO, TN U.S.A.

TITLE: TYPE O Plus C™, IEEE, CONDENSER BUSHING

P/E FILE KEY: L23 GEN ASM

RESP. DEPT.: BUSHINGS

DFTR: B.BASKIN 11-08-04

CHKD:

APPD: T.KUHLMAN

UNITS = in./[mm]

SCALE = 0.093

LANG. = ENGLISH

DRAWING NO: T230W0800UT

REV.: 3

SHEET 1 OF 1

WE RESERVE ALL RIGHTS IN THIS DOCUMENT AND IN THE INFORMATION CONTAINED THEREIN. REPRODUCTION, USE OR DISCLOSURE TO THIRD PARTIES WITHOUT EXPRESS AUTHORITY IS STRICTLY FORBIDDEN. © ABB.

SIEMENS Siemens Energy Inc. Oil & Gas
TransCanada Pipeline
Doc Number SEI-KXL-TXF-0138-PIAPT
Release 7
Issued by Mainda Pitts

SPECIAL FEATURES: NONE

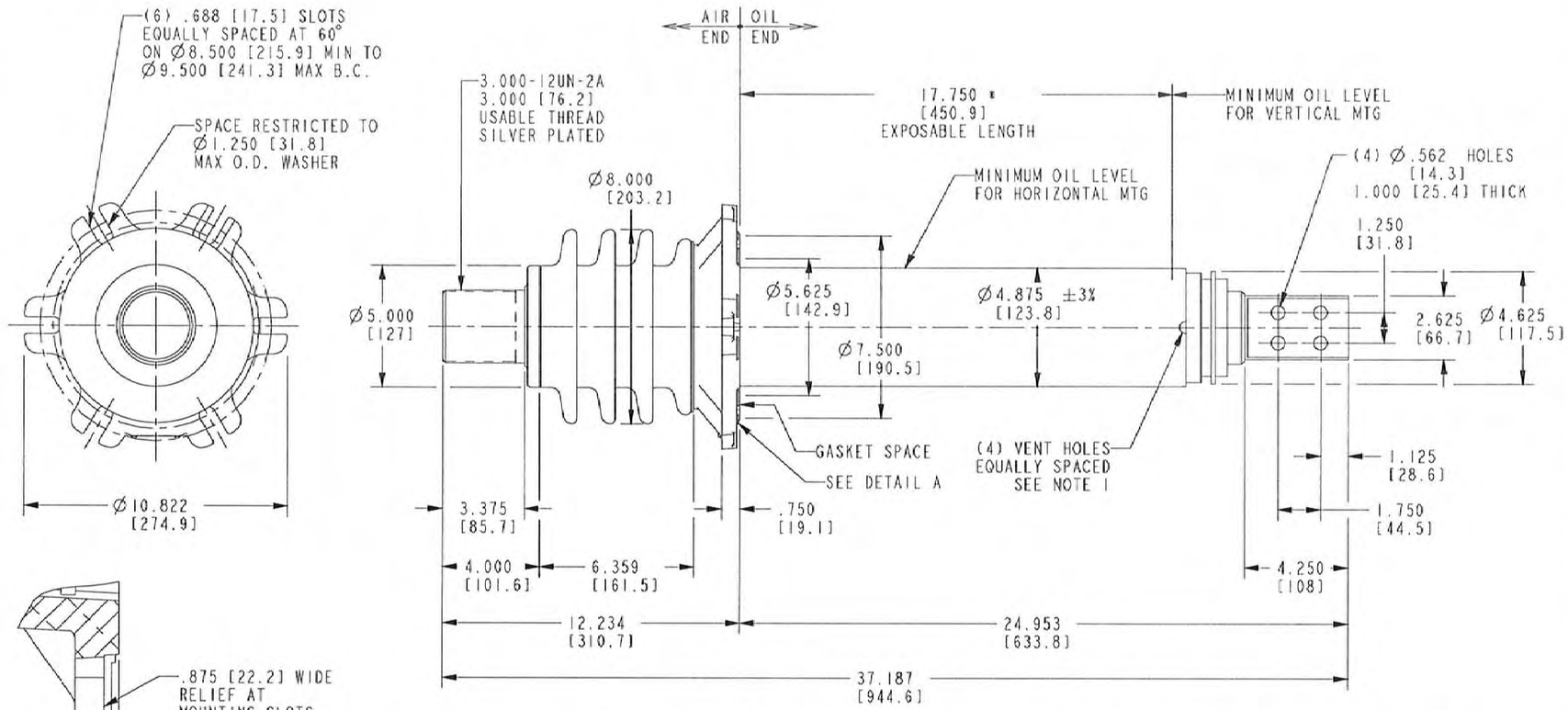


* THIS BUSHING IS NOT PROVIDED WITH A GROUND SLEEVE. IF CURRENT TRANSFORMERS ARE USED, THEY SHOULD HAVE SUFFICIENT INSULATION AND ELECTRICAL CLEARANCE FROM THE HIGH VOLTAGE LEAD OR CONDUCTOR.

NOTE:
1. FOR SIDE-WALL APPLICATION, BUSHING IS TO BE MOUNTED SO THAT (2) VENT HOLES ARE ON THE VERTICAL AXIS OF APPARATUS.
2. FOR OPTIMUM LOW CORONA PERFORMANCE, THE GAP BETWEEN THE PORCELAIN AND THE CONDUCTOR MUST BE FLOODED WITH OIL. IN ORDER TO FLOOD THIS GAP WITH OIL, IT IS NECESSARY THAT THE BUSHING BE MOUNTED ON APPARATUS AND THEN EVACUATED AT 5mm VACUUM WHILE THE EQUIPMENT IS BEING FILLED WITH OIL.

| STYLE NO. | CATALOG NO. | OUTER INSULATING ENVELOPE COLOR | INSULATION CLASS kV | BASIC IMPULSE LEVEL kV | MAX. LINE TO GROUND VOLTAGE kV | CONNECTION METHOD AND CONTINUOUS CURRENT A @ 60Hz | | | MINIMUM CREEP DISTANCE in. / [mm] | MINIMUM ARCING DISTANCE in. / [mm] | MAXIMUM ALTITUDE ft / [m] | MOUNTING ANGLE FROM VERTICAL deg | APPROX. WEIGHT lb / [kg] |
|---|---|---|---|---|---|---|---|---|---|---|---|---|---|
| | | | | | | DRAW-LEAD | INBOARD END TRANS. | INBOARD END O.C.B. | | | | | |
| 015J0400AN | WIB040BB | GRAY | 15 | 110 | 10 | N/A | 4000 | N/A | 13.812 [351] | 6.359 [162] | 5750 [1753] | 0 TO 90 | 112 [50.8] |
| 015K0400AN | WIB040 | BROWN | | | | | | | | | | | |

REVISIONS

| NO. & LOC. | |
|---|---|
| — | D-4A0538 NEW ISSUE. REPLACES PART OF P3946B239. W.A.SHINER 2-07-01 |

PRINTS TO:

| | | | | | |
|---|---|---|---|---|---|
| 1 | | 7 | | 13 | |
| 2 | | 8 | | 14 | |
| 3 | | 9 | | 15 | |
| 4 | | 10 | | 16 | |
| 5 | | 11 | | 17 | |
| 6 | | 12 | | 18 | |
| REF: | | | | | |

SIEMENS Siemens Energy Inc. Oil & Gas
TransCanada Pipeline
Doc Number SEI-KXL-TXF-0138-PIAPT
Release 7
Issued by Mainda Pitts

ABB Inc.
ALAMO, TN U.S.A.

TITLE: TYPE A™, IEEE, BULK BUSHING

P/E FILE KEY: BULK GEN ASM

RESP. DEPT.: BUSHINGS

DFTR: W.A.SHINER 07-Feb-01
CHKD:
APPD: H. McKIM 2/8/01

UNITS = in./[mm]
SCALE = 0.313
LANG. = ENGLISH

DRAWING NO: T015J0400AN
REV.: 1
SHEET 1 OF 1

WE RESERVE ALL RIGHTS IN THIS DOCUMENT AND IN THE INFORMATION CONTAINED THEREIN. REPRODUCTION, USE OR DISCLOSURE TO THIRD PARTIES WITHOUT EXPRESS AUTHORITY IS STRICTLY FORBIDDEN. © ABB.

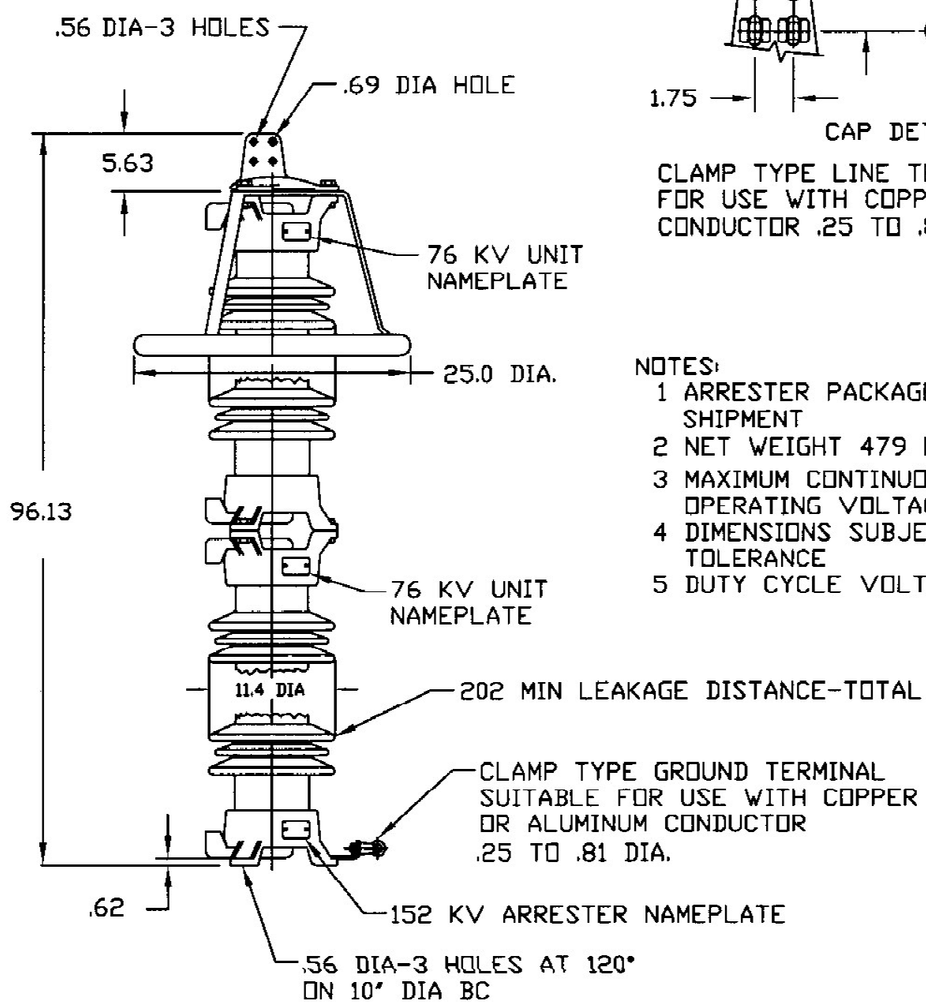


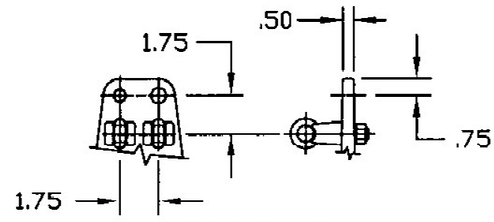


CAP DETAIL

CLAMP TYPE LINE TERMINALS SUITABLE FOR USE WITH COPPER OR ALUMINUM CONDUCTOR .25 TO .81 DIA

NOTES:
1 ARRESTER PACKAGED FOR DOMESTIC SHIPMENT
2 NET WEIGHT 479 LB
3 MAXIMUM CONTINUOUS LINE TO GROUND OPERATING VOLTAGE, 152KV RMS
4 DIMENSIONS SUBJECT TO ± 3% TOLERANCE
5 DUTY CYCLE VOLTAGE RATING 192 KV RMS

ANSI-70 GREY GLAZE
ALTITUDE TO 12,000 FT

SIEMENS Siemens Energy Inc. Oil & Gas
TransCanada Pipeline
Doc Number SEI-KXL-TXF-0138-PIAPT
Release 7
Issued by Mainda Pitts

| .5 μ SEC 10KA IR KV | 1 KA SWITCHING SURGE IR KV | MAXIMUM 8/20 DISCHARGE VOLTAGE - KV AT | | | | | |
|---|---|---|---|---|---|---|---|
| | | 1.5 KA | 3.0 KA | 5 KA | 10 KA | 20 KA | 40 KA |
| 476 | 365 | 377 | 401 | 412 | 440 | 477 | 531 |

STATION CLASS SURGE ARRESTER

HUBBELL/THE OHIO BRASS CO.
8711 WADSWORTH ROAD, WADSWORTH, OHIO

| | | | |
|---|---|---|---|
| PART NAME | VN 152KV MCOV 217752-5001 | | SCALE .06=1 |
| DESIGN DWL | DATE 10/06/93 | DWG. NO. S006367-00 | REV. NO. 02 |
| DRAWN JVR | DATE 08/08/98 | | |

Approved 08-14-1998

902

| E | "ING,PER,MEC,ACC,ELE" Part/Assambly reference only for Engineering | | | Qty. Part |
|---|---|---|---|---|
| Cons | Part/Ens | Material | Part/Material Description | |
| 1 | B-10675 | SS-316 | Stainless steel (0.031") 0.787mm THK. | 1 |
| 2 | B-10675 | SS-316 | Stainless steel (0.031") 0.787mm THK. | 1 |

MAIN TRANSFORMER TAG ID

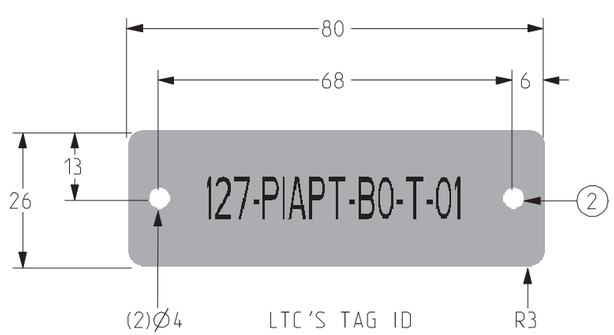


LTC'S TAG ID

SIEMENS Siemens Energy Inc. Oil & Gas
TransCanada Pipeline
Doc Number SEI-KXL-TXF-0138-PIAPT
Release 7
Issued by Mainda Pitts

DIMENSIONS ARE IN MM

SIEMENS
Siemens Transformadores S.A. de C.V.

REV:0 ##/##/##, NAME
Rev. 1 April 17, 2012

| DRAWING TITLE: TAG ID PLATE | | | | | |
|---|---|---|---|---|---|
| Pro/E | WEIGHT (Kg): NA | DATE: 25-Apr-11 | DRAWN BY: LUVIANO C | CHECKED BY: ALCANTARA | APPROBED BY: MANCERA R |
| | SCALE: 1:1 | DRAWING NUMBER: B-10675 | | TP NUMBER: 1092.03 | SHEET: 1/1 |

This drawing has propriety information his total or partial reproduction is not authorized