ITEMS:

1. PROVISION ON BASE FOR SKIDDING AND JACKING.
2. TRANSFORMER LIFTING LUGS.
3. STAINLESS STEEL GROUND PADS.
4. STAINLESS STEEL DIAGRAMMATIC NAMEPLATE.
5. MANHOLE WITH COVER, BOLTED AND GASKETED.
6. WELDED TOP COVER.
7. COOLING RADIATORS BOLT-ON TYPE (WITHOUT VALVES).
8. HV PORCELAIN BUSHING, 15KV, 110KV BIL, 600A (3).
9. LV PORCELAIN BUSHING, 5KV, 75KV BIL, 1227A (4)
10. COMBINATION LOWER DRAIN AND FILTER VALVE 2" NPT WITH SAMPLER.
11. UPPER FILTER PLUG (1" NPT).
12. VTC PRESSURIZATION TEST POINT AND GAS SAMPLING WITH 1/2" NPT BALL VALVE.
13. LIQUID LEVEL GAUGE WITH CONTACTS, GAUGE CENTER IS 25° C OIL LEVEL MARK, (QUALITROL PN: 032-100-01 CS-35670).
14. OIL TEMPERATURE GAUGE WITH CONTACTS WITH PEAK DEMAND HAND, (QUALITROL PN: 165-241-05).
15. PRESSURE VACUUM GAUGE WITH CONTACTS WITH 2 SETS OF CONTACTS AND BLEEDER, (QUALITROL PN: 50-35E).
16. PRESSURE RELIEF DEVICE WITH ALARM CONTACTS (QUALITROL PN: LPRD00-00039022).
17. DE-ENERGIZED, NO LOAD MANUAL TAP CHANGER WITH PROVISION FOR PADLOCKING.
18. JUNCTION BOX, NEMA 4, 24H X 20W X 8D.
19. TRANSFORMER JACKING PADS PLATES.
20. HV AIR TERMINAL CHAMBER, PARTIAL HEIGHT, FRONT HINGED, BOLTED AND GASKETED ACCESS PLATE, BOLTED AND GASKETED BOTTOM ACCESS PLATE.
21. LV AIR TERMINAL CHAMBER , PARTIAL HEIGHT, FRONT HINGED, BOLTED AND GASKETED ACCESS PLATE, BOLTED AND GASKETED BOTTOM ACCESS PLATE.
22. JUNCTION BOX FOR EXTERNAL CORE GROUND.
23. PHENOLIC ID TAG:
    - FOR UNIT A: 121-HRDBP-B0-DT-01
    - FOR UNIT B: 121-HRDBP-B0-DT-11
    - FOR UNIT C: 127-PIAPT-B0-DT-01
    - FOR UNIT D: 122-LKSDE-B0-DT-01
    - FOR UNIT E: 128-GRSSY-B0-DT-01
    - FOR UNIT F: 123-MTRSP-B0-DT-01
    - FOR UNIT G: 125-BDLSS-B0-DT-01
    - FOR UNIT H: 126-FXVLY-B0-DT-01
    - FOR UNIT I: 124-DYENS-B0-DT-01

NOTES:

1. LUMINOL TRI FLUID FILLED TRANSFORMER, 840 LITER. APPROX.
2. OUTDOOR SERVICE POWER DISTRIBUTION.
3. PAINT : ANSI 61 EPOXY WITH POLYURETHANE TOP COAT, (VTC SYS. III), 5MIL DFT.
4. UNIT DESIGNED FOR SEALED TANK OIL PRESERVATION.
5. SEE SHEET 20 SERIES SHEETS FOR SCHEMATICS.
6. ACCESSORY WIRING IN GALVANIZED FLEX CONDUIT.
7. TOUCH UP PAINT KIT PROVIDED.
8. EXTERNAL HARDWARE STAINLESS STEEL 304.
9. THIS TRANSFORMER MEETS CSA REQUIREMENTS.

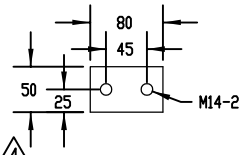

STAINLESS STEEL GROUND PAD 13 THK.

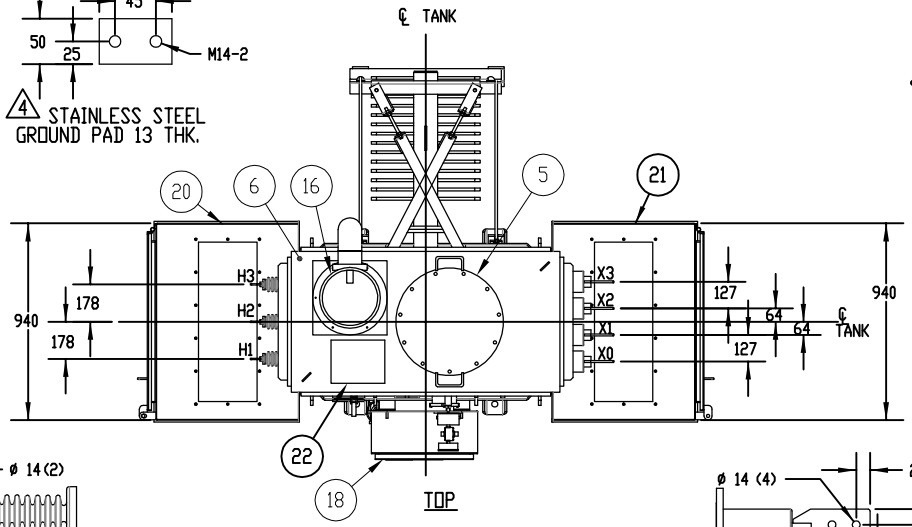

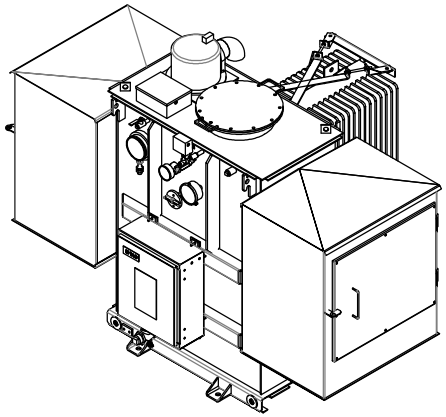

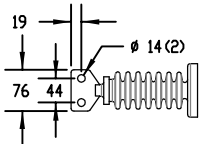

HV BUSHING SPADE DETAIL
1/4" THK. Cu TIN PLATED RED-BRASS

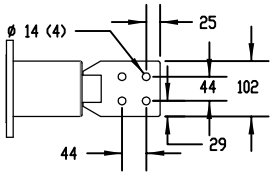

LV BUSHING SPADE DETAIL
13 THK. Cu TIN PLATED RED-BRASS

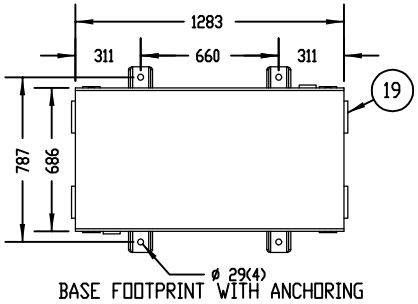

BASE FOOTPRINT WITH ANCHORING

*TRANSFORMER DESIGNED TO MEET CSA EFFICIENCY

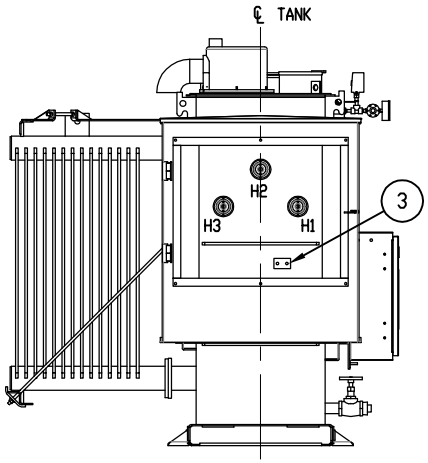

LEFT

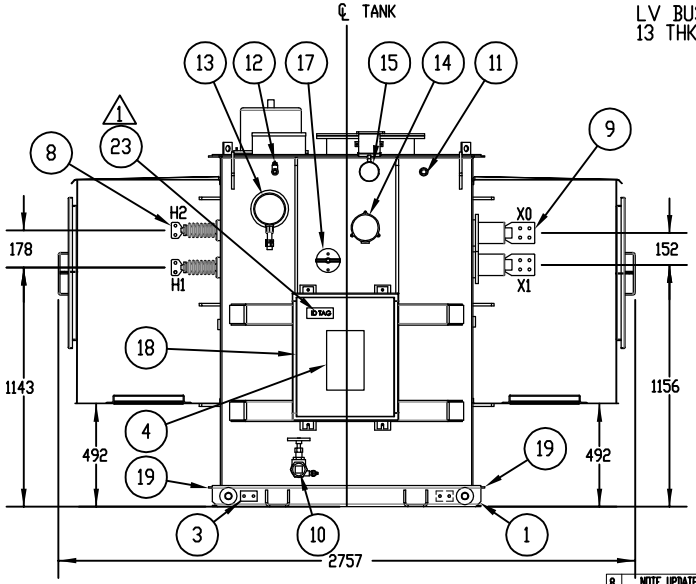

FRONT

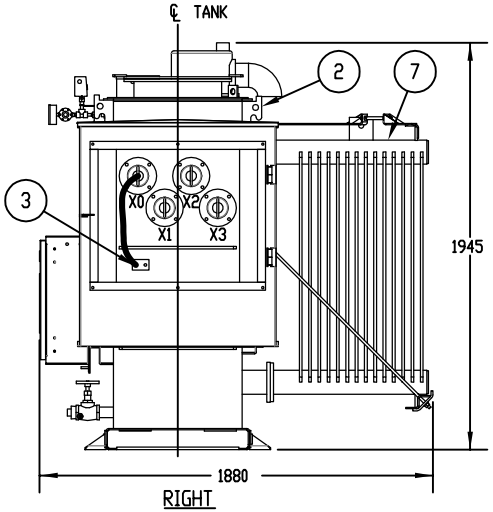

RIGHT

LIQUID FILLED TRANSFORMER DATA			
MOD/SN: 430600A004W		KVA: 600	
PHASES: 3		65 °C RISE	
TAP: ±2 @ 2.5%		CLASS: ONAN	
IMP: 5.75 ±7.5%		WT: 3,719 KGS	
WINDINGS: COPPER			
	VOLTS	BIL	AMPS.
H.V.	6900	75	50.2
L.V.	480GRDY/277	30	722

CUSTOMER: SIEMENS ENERGY INC.

8 NOTE UPDATED AAU 07/27/20	7 CSA LOGO DELETED DBR 6/21/11	6 MODIFIED PAINT DESCRIPTION DBR 6/21/11	5 AS BUILT DRAWING DBR 5/17/11	4 ADDED CHANGES TO MEET CSA REQUIREMENTS CMT 2/22/11
		1 CHANGED BALLOON FOR ITEM 23 AND ID TAG FOR UNIT B ADC 07/16/10	2 AS BUILT MGM 26/10/10	3 MODIFIED ID TAGS DBR 12/13/10

WARRANTY FIELD WORK:
IF, AT THE JOB SITE, THE EQUIPMENT IS FOUND TO HAVE NOT CONFORMED TO SPECIFICATIONS OR NEEDS RE-WORK COVERED UNDER WARRANTY, ALL PARTIES CONCERNED SHALL PROVIDE FULL ACCESS TO VIRGINIA TRANSFORMER CORP. OR THEIR REPRESENTATIVES TO WORK ON THE UNIT(S) AT THE JOB SITE. THE METHOD OF REPAIR/RE-WORK WILL BE DETERMINED SOLELY BY VIRGINIA TRANSFORMER CORP.

TOLERANCES IF NO TOLERANCES SHOWN +-12.7(0.5)
OTHERWISE +-6.30(.25) +-25.4(1.0)

ALL DIMENSIONS IN mm & IN INCHES IF SHOWN IN PARENTHESIS

THIS DOCUMENT IS INTENDED FOR COORDINATION PURPOSES ONLY. OTHER USES ARE PROHIBITED EXCEPT BY WRITTEN PERMISSION OF VTC.
WL626A-101.DWG

VT VIRGINIA TRANSFORMER CORP.
220 GLADE VIEW DR., N.E., ROANOKE, VA 24012
(540) 345-9892

TITLE: DIMENSIONAL OUTLINE — JOB: WL626A-1
DWN: ADC | CHK: AMM | DATE: 06/18/10 | DWG SCALE 1:26 | PLOT SCALE 1:26
C 430600A004W — SHEET 1 OF 1 — REV 8