V-100B	V-110B	C-200B	M-300B	E-400B
INLET SEPARATOR	OIL/GAS SEPARATOR	COMPRESSOR	DRIVER	AIR COOLED EXCHANGER
12 3/4" O.D. x 46" S/F	14" O.D. x 46" S/F	GARDNER DENVER ENDURO E25	TECO WESTINGHOUSE OPTIM HE PLUS	GHT-600, 250 PSIG @ 250°F
285 PSIG @ -20/100°F	350 PSIG @ -20/450°F	4.4 VI, FOOT MOUNT	75HP, 3600 RPM, 575V/3PH/60Hz	2HP, 1725 RPM, 600V, TEXP MOTOR
			TEFC ELECTRIC MOTOR	

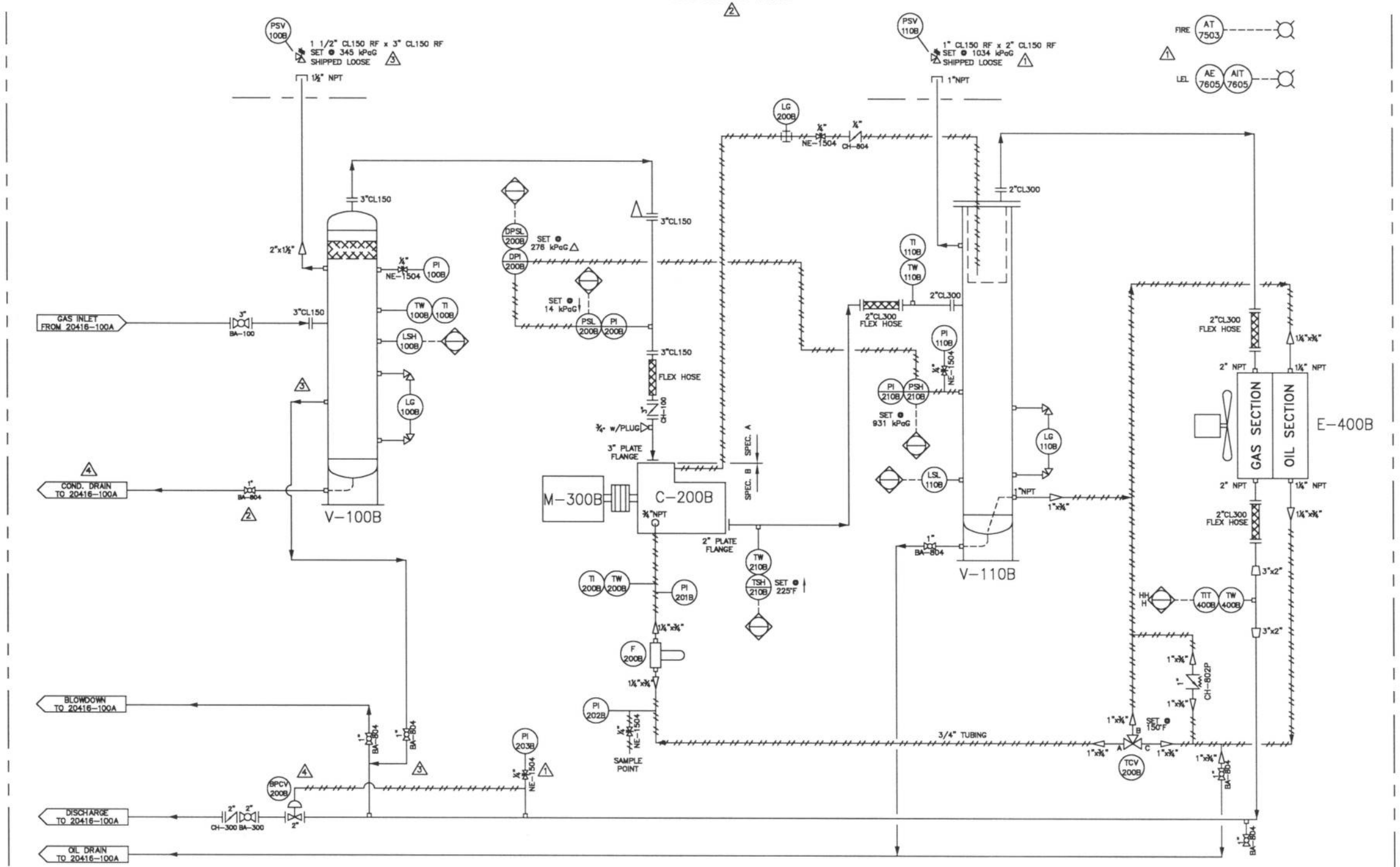

AS-BUILT

Approved JB Date 23/03/09

PROJECT NAME: C5+ TRANSLOADING TERMINAL
PROJECT NO. 2007-115
P.O. NO.: 4500093383
LOCATION: BRUDERHEIM, AB

SIGNAL TO/FROM PANEL
LOCALLY MOUNTED
MAIN CONTROL PANEL
LOCAL GAUGE PANEL
PNEUMATIC SIGNAL
ELECTRIC SIGNAL
CAPILLARY SIGNAL

BA-804
BA = BALL VALVE
CH = CHECK VALVE
GA = GATE VALVE
GL = GLOBE VALVE
NE = NEEDLE VALVE
0 = RF
1 = RTJ
2 = SW
3 = SW x NPT
4 = NPT
0 = SWEET SERVICE
1 = NACE
1 = ANSI 150#
3 = ANSI 300#
5 = ANSI 600#
6 = CLASS 900
8 = ANSI 900#
15 = CLASS 6000
BALL VALVE
CHECK VALVE
GATE VALVE
GLOBE VALVE
NEEDLE VALVE

REV	DESCRIPTION	DATE	APP'D
4	AS BUILT	MAR.20/09	
3	REVISED AS NOTED	MAR.9/09	
2	REVISED AS NOTED	FEB.26/09	
1	REVISED AS NOTED	FEB.17/09	
0	ISSUED FOR CONSTRUCTION	FEB.9/09	
B	RE-ISSUED FOR APPROVAL	JAN.29/09	
A	ISSUED FOR APPROVAL	JAN.22/09	

REVISION HISTORY

BRITTANIA INDUSTRIES INC.
2313 - 8TH STREET
NISKU, ALBERTA
T9E 7Z3
PH: (780) 955-7524
FAX: (780) 955-7468

DRAWN	DATE
JB	JAN.22/09
APPROVED	DATE
SCALE	
NTS	
JOB No.	
20416	

PROCESS AND INSTRUMENTATION DIAGRAM
DUAL 75HP GARDNER DENVER
ENDURO E25 SCREW PACKAGE

CUSTOMER: CANEXUS CHEMICALS CANADA LTD. c/o RANGELAND ENGINEERING LTD.
DWG NO.: 20416-100B
Rev: 4

THE DESIGN AND SPECIFICATIONS ON THIS DOCUMENT ARE THE PROPERTY OF BRITTANIA INDUSTRIES INC. AND SHALL NOT BE REPRODUCED OR COPIED IN ANY FORM WITHOUT WRITTEN PERMISSION BY AN OFFICER OF THE COMPANY.