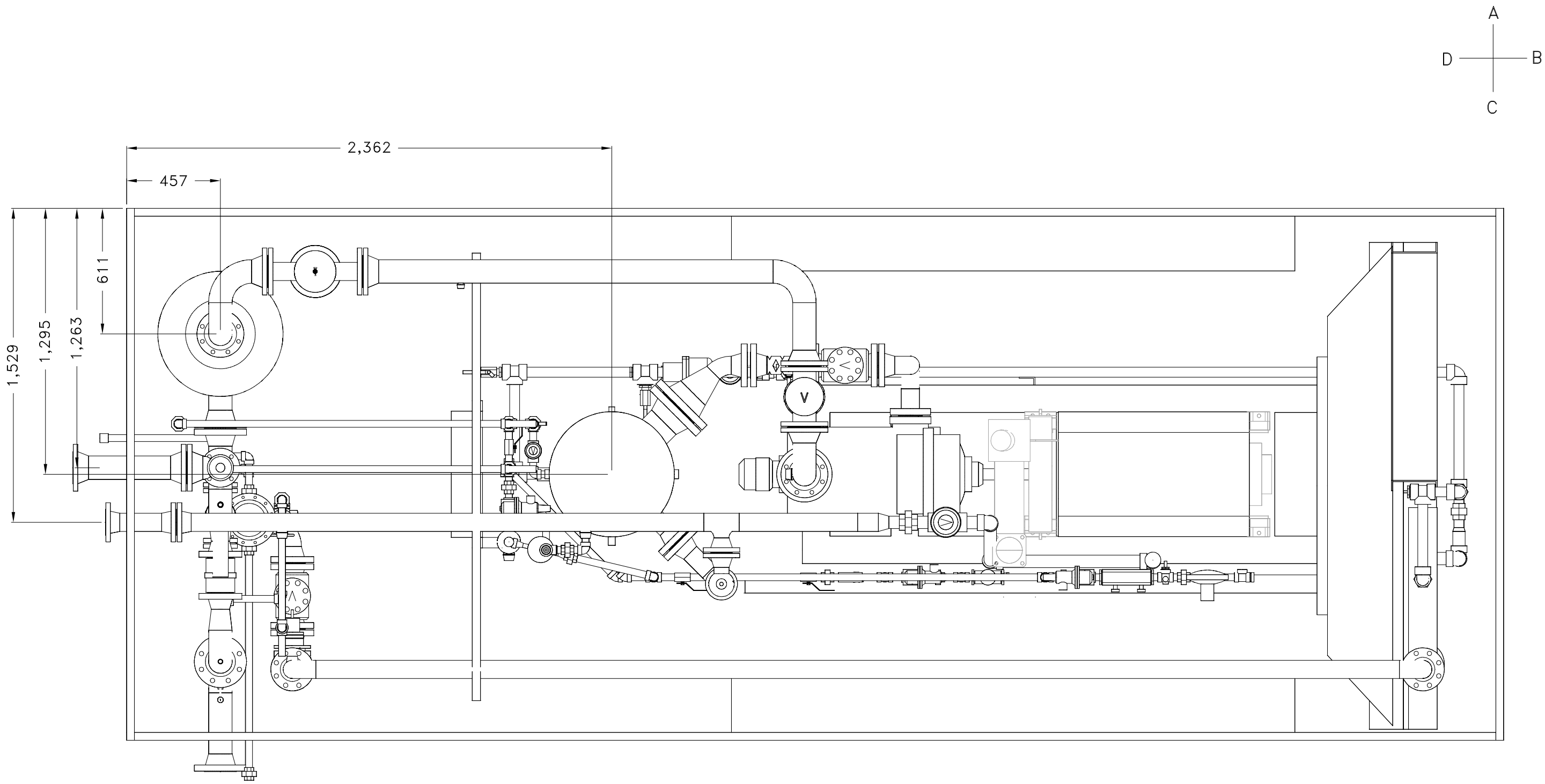

PLAN VIEW
SCALE 1:20

REV.	DESCRIPTION	BY	APP.	DATE
0	ISSUED FOR REVUE	JAM		00-04-14

JIRO Manufacturing Ltd.
5221-46 Str.
Box 1450, Stettler Alberta
T0C 2L0
Phone: (403) 742-5538
Fax: (403) 742-5539
CADD Department E-mail
cad@jiromfg.com

9000 SERIES COMPRESSOR
CATERPILLAR ENGINE w/MYCOM SCREW
—

COMPANY:	CLIENT:	JOB NO.:
–	–	90104

Drawn by:	Checked by:	DATE:	SCALE:	DRAWING NO.:	REV.:
J.A. Markusson		00-04-14	1:20	J-102-02	0