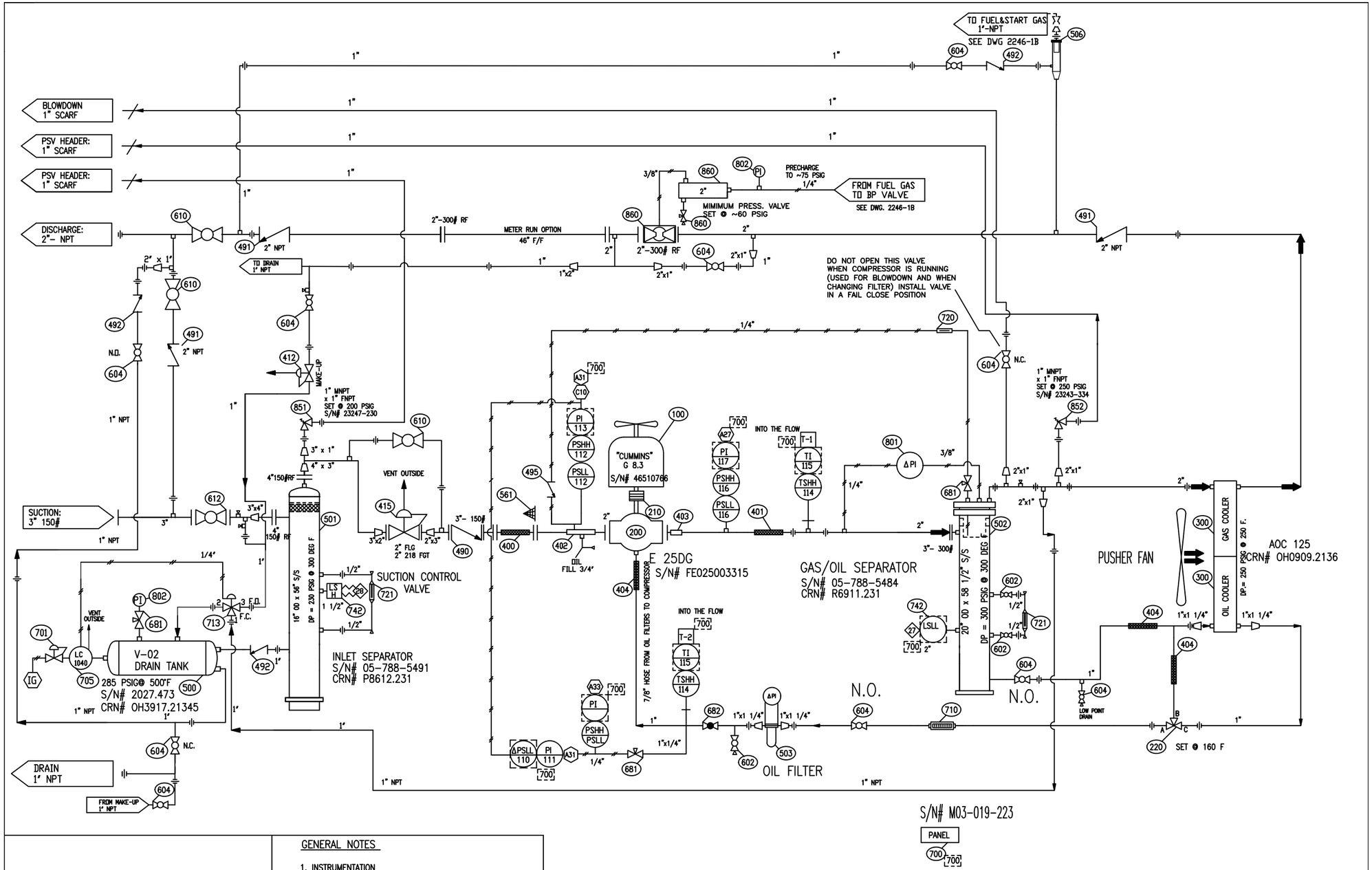

TUBING CONN'S

- C10 COMPRESSOR SUCTION PRESSURE
- A27 COMPRESSOR DISCHARGE PRESSURE
- A31 COMPRESSOR OIL DIFFERENTIAL PRESSURE
- A33 COMPRESSOR OIL PRESSURE
- 700 ELECTRICAL CONN'S (INTRINSICALLY SAFE)
- 27 LOW OIL LEVEL-GAS/OIL SEPARATOR
- 28 HIGH LIQUID LEVEL-INLET SEPARATOR

CAPILARY CONN'S

- T-1 HIGH COMPRESSOR DISCHARGE TEMPERATURE
- T-2 HIGH COMPRESSOR OIL TEMPERATURE

GENERAL NOTES

1. INSTRUMENTATION
   - PROCESS TUBING : 1/4" O.D. x .035" WALL, 304SS
   - PROCESS FITTINGS : CADIUM PLATED W/ 304SS FERRULES
   - OIL TUBING : 1/4" O.D. x .035" WALL, 304SS
   - OIL FITTINGS : CADIUM PLATED W/ CARBON STEEL FERRULES
   - INSTRUMENT TUBING : 1/4" O.D. x .035" WALL, 304SS
   - INSTRUMENT FITTINGS : CADIUM PLATED W/ 304SS FERRULES
   - HEATER SUPPLY : 1/2"
2. PROCESS PIPING
   - CONSTRUCTED IN ACCORDANCE WITH B31.3
   - CORROSION ALLOWANCE = 1/16"
   - ONE COAT OF SHOP PRIMER
   - INLET NITRO TEST TO 220 PSIG
   - NITRO TEST DISCHARGE TO 299 PSIG
   - SCREWED FITTINGS TO BE 2000# FORGED STEEL
   - 10% X-RAY BUTTWELD
3. UTILITY PIPING
   - ALL PIPING 2" and LESS SHALL BE Min. SCH 80
   - SCREWED FITTINGS TO BE 2000# FORGED STEEL
4. PAINTING
5. VESSELS
   - CRN FOR PROVINCE OF ALBERTA

SWEET GAS SERVICE

REV	DATE	BY	DESCRIPTION
1	6-29-06	WS	AS-BUILT
0	10-3-05	BJ	FOR CONSTRUCTION

REVISIONS

DRAWN	STS
DATE	7-27-05
SCALE	N.T.S.

BRAHMA COMPRESSION

PROCESS FLOW DIAGRAM
FOR
TAMROTOR E25DG CUMMINS G 8.3

CUSTOMER:
BRAHMA COMPRESSION (AGLP)

SHOP ORDER: SO-2246
REVISION: 1 6-29-06
DWG. 2246-1A