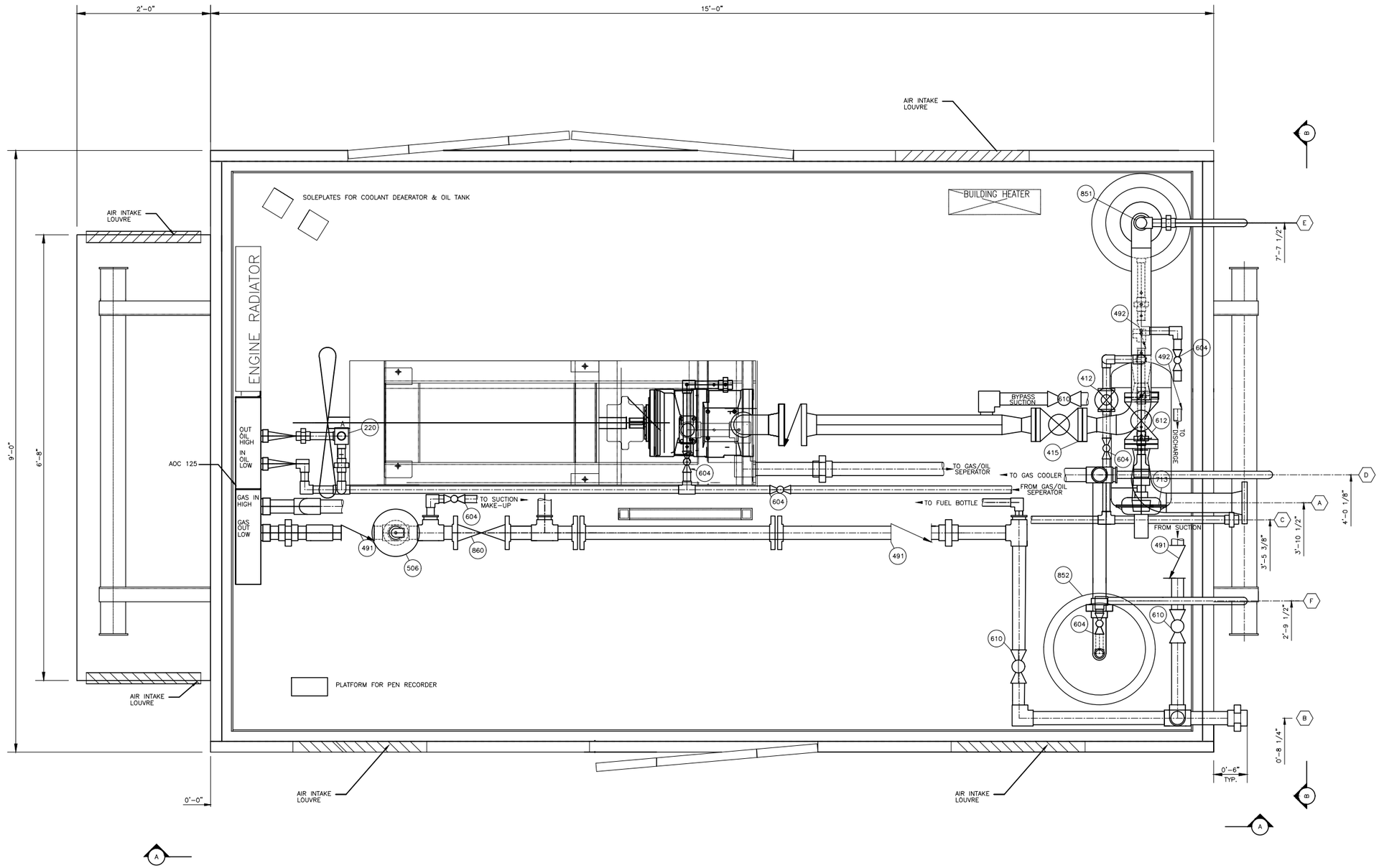

PLAN VIEW

SCHEDULE OF OPENINGS			ELEV FROM TOP OF SKID TO CENTER OF PIPE
MARK	SIZE	DESCRIPTION	
A	3" 150# FLANGED	GAS SUCTION	3'-9 1/2"
B	2" NPT	GAS DISCHARGE	0'-4 7/8"
C	1" NPT	LIQUIDS DRAIN HEADER	0'-2"
D	1" PIPE	PSV #852 VENT	8'-2 1/2"
E	1" PIPE	PSV #851 VENT	8'-2 1/4"
F	1" PIPE	BLOWDOWN	6'-8 3/4"

REV	DATE	BY	DESCRIPTION
1	6-29-06	WS	AS-BUILT
0	10-03-05	BJ	ISSUED FOR CONSTRUCTION

REVISIONS

DRAWN	TRF
DATE	02-01-05
SCALE	NTS
CHK'D	
APP'D	

BRAHMA COMPRESSION

COMPRESSOR PACKAGE TAMROTOR 25DG & CUMMINS G8.3 C

CUSTOMER:

BRAHMA COMPRESSION (AGLP)

JOB # S0-2246

REVISION: 1 6-29-06

DWG. 2246-2