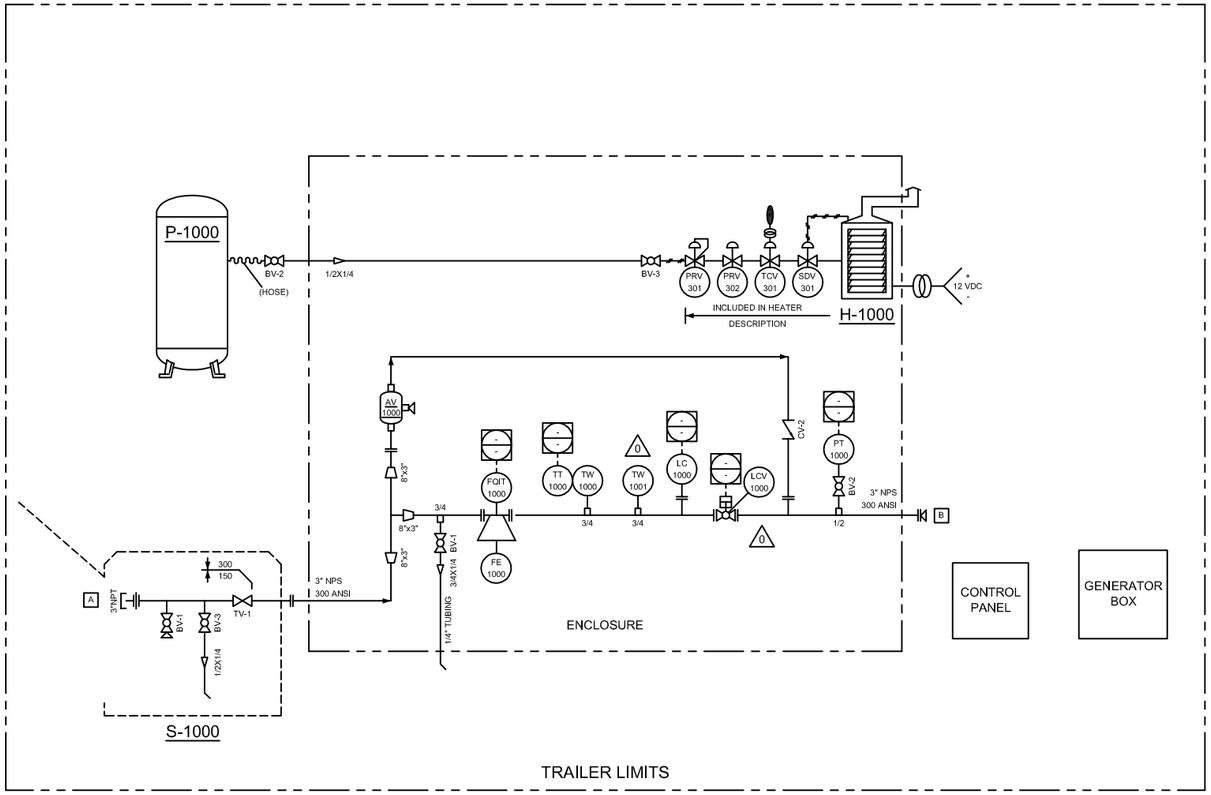

BILL OF MATERIALS

TAG NO.	DESCRIPTION
AV-1000	ARMSTRONG 33 AV FREE FLOATING LEVER AIR GAS VENT (FORGED STEEL) 3/4" CONNECTIONS,720 PSI
FE-1000	FOXBORO CFS20-30 MASS FLOWTUBE, 3" 300 ANSI RF
FQI-1000	FOXBORO CFT51 DIGITAL CORIOLIS MASS FLOW TRANSMITTER
H-1000	WX12X12 CATADYNE OIL AND GAS HEATER
LC-1000	DREXELBROCK RCT RF SERIES LEVEL CONTROLLER, 3" 300 ANSI MODEL: 700-9100-303
LCV-1000	JAG BALL VALVE, 3" 300 ANSI RF, FP & BETTIS EM500 TORQPLUS ELECTRIC ACTUATOR
P-1000	PROPANE TANK
PT-1000	AST46HA EXPLOSION-PROOF PRESSURE TRANSMITTER
S-1000	3" RETROFIT LOADLINE SECURE FLOW CONTROL SPILLBOX (BLACK)
TT-1000	WIKA DIGITAL TEMPERATURE TRANSMITTER MODEL T12.10
TW-1000/1001	THERMOWELL, 3/4" X 1/2" X 2-1/2" X 0.260" STEM, 316SS
.	.
.	.
.	.