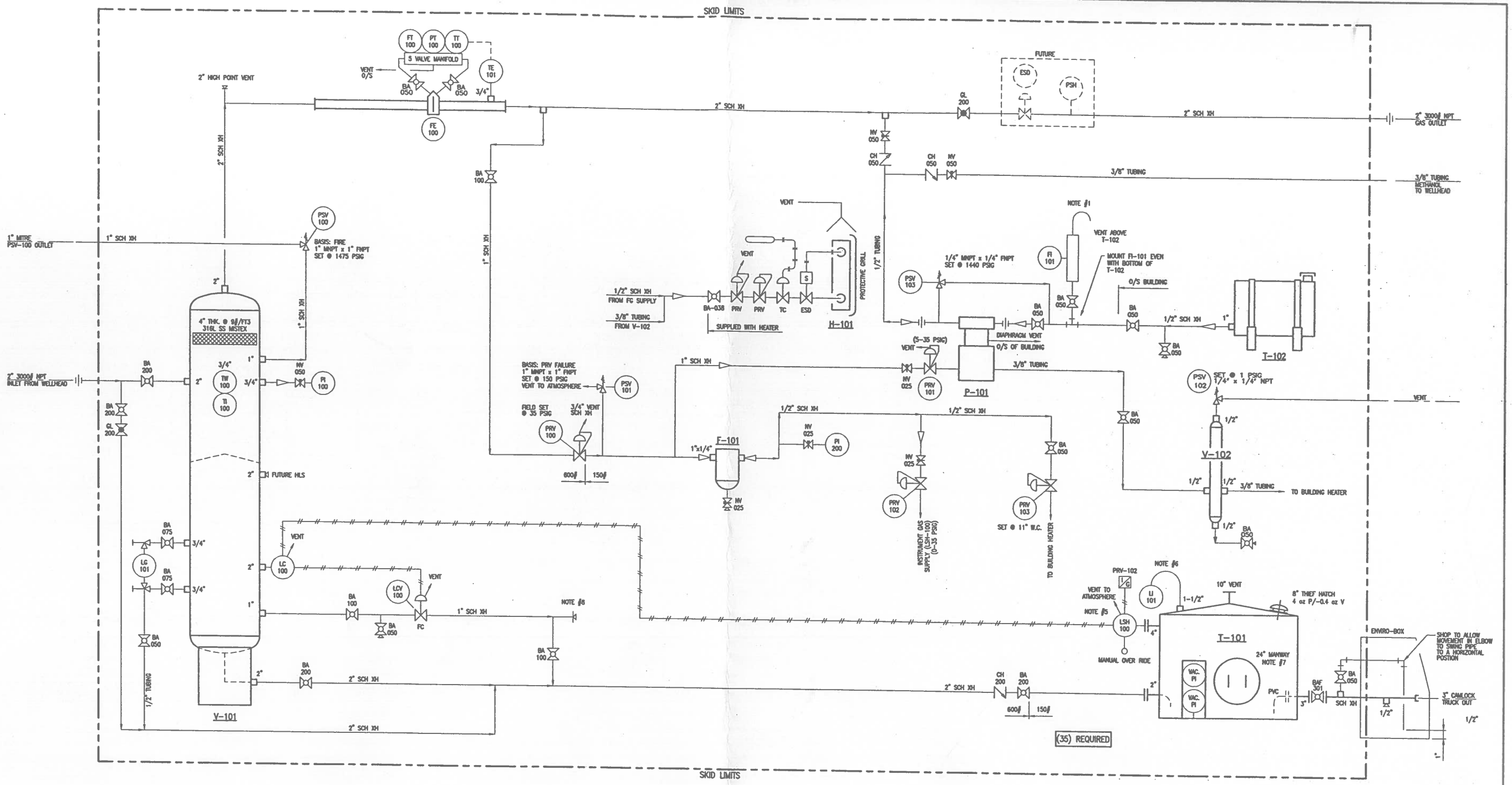

V-101
INLET SEPARATOR
VERTICAL, 2 PHASE
12 3/4" OD x 5'-0" SEAM/SEAM
1480 PSIG MAWP @ 100°F
1/16" CORROSION ALLOWANCE
SWEET SERVICE
-20°F MDMT

V-102
EXHAUST SCRUBBER
2 3/8" OD x 3'-0" SEAM/SEAM
14.9 PSIG MAWP @ 100°F
1/16" CORROSION ALLOWANCE
SWEET SERVICE
-20°F MDMT

P-101
INJECTION PUMP
TXT MODEL 5113 LP
6000 PSIG MAXIMUM DISCHARGE PRESSURE
16 IMP. GALLONS PER DAY

T-101
60 BBL STORAGE TANK
DOUBLE WALL (TIGHT WRAP)
7'-6" OD x 8'-0" HIGH

T-102
250 GALLON STORAGE TANK
NUSCO STANDARD

H-101
BUILDING HEATER
FLAMELESS INFRA-RED NATURAL GAS
CATADYNE MODEL WX-24x24
12,000 BTU/HR

F-101
FUEL GAS FILTER
FLO-DRI MODEL C-10-MA
CRN 0H1609.2
DESIGN PRESS: 150 PSIG
DESIGN TEMP: -50°F TO 200°F

PART	DESCRIPTION	PART	DESCRIPTION
PSV-100	TAYLOR MODEL 8200 PRESSURE RELIEF VALVE	FI-101	GRESCHNER MODEL SC-130 LIQUID RATE/LEVEL GAUGE
PSV-101	TAYLOR MODEL 8200 PRESSURE RELIEF VALVE	PRV-100	FISHER MODEL 627 PRESSURE REDUCING REGULATOR
PSV-102	SS-4CP2-1 (1/4" MNPT) CHECK VALVE	PRV-101	FISHER MODEL 67CFR INSTRUMENT GAS REGULATOR
PSV-103	NUPRO MODEL SS-4R3A5-C-BU PIPE ENDED CHECK VALVE	PRV-102	FISHER MODEL 67CFR INSTRUMENT GAS REGULATOR
FE-100	NORTH STAR SIMPLEX METER RUN	PRV-103	FISHER MODEL 912N-115 PRESSURE REDUCING REGULATOR
TT/PT/FT c/w TE-100	ROSEMOUNT MODEL 3095FB3DAB4I3A0I1CN MULTIVARIABLE TRANSMITTER	PI-100	NUOVA FIMA MODEL MGS18/3A-421 PRESSURE GAUGE
	WITH MODBUS RTU PROTOCOL	PI-200	NUOVA FIMA MODEL MGS18/3A-213 PRESSURE GAUGE
LSH-100	WELLMARK PNEUMATIC LEVEL SWITCH MODEL ST2TP w/ OVERRIDE	TI-100	GAUGETECH MODEL GT36-02 TEMPERATURE INDICATOR
LC-100	FISHER MODEL L2 LEVEL CONTROLLER	LI-101	GAUGE BOARD
LCV-100	FISHER D2 FLOPRO CONTROL VALVE		
LG-101	PENBERTHY REFLEX LEVEL GAUGE		

NOTE:

1) MOUNT FI-101 EVEN WITH BOTTOM OF T-102
2) PRV-100 IS TO BE MOUNTED AS CLOSE AS POSSIBLE TO F-101
3) USE TUBING UP TO PUMP (AS CLOSE AS POSSIBLE)
4) THERE ARE (2) TWO SPOOL SHEETS WITH THIS DRAWING SERIES.
5) FLOAT AND ROD TO BE SHIPPED LOOSE FOR FIELD INSTALLATION.
6) SHOP TO SECURE THE LEVEL INDICATOR FLOAT FOR SHIPPING
7) MANWAY COVER TO BE COMPLETELY BOLTED TO TANK
8) LOCATE TEE c/w PLUG AT FIRST CHANGE OF DIRECTION DOWNSTREAM OF LCV-100 (THIS APPLIES STARTING AT W.O. 007864).

AS BUILT

APR 22 2014

REV.	DATE	DRWN.	APP'D.	DESCRIPTION
1	04/04/22	IE		AS - BUILT
0	04/04/12	KCS		REMOVED FROM D1523-001 (ISSUED FOR CONSTRUCTION).

REVISIONS

NUSCO MANUFACTURING & SUPPLY LTD.

CUSTOMER: ENCANA RESOURCES
C/O DPH ENGINEERING INC.

P.O. 6300-D001
DPH JOB NO. 6300

TITLE: WELLSITE SEPARATOR / TANK PACKAGE
P&ID

LOCATION:

QUOTATION FILE No.: E0238-03Q00

SCALE: 3/4"=1'-0"

W.O.: 007860-245 TO 007894-245

DRWG. No.: D1523-003

Rev.: 1

DATE: 03/12/11