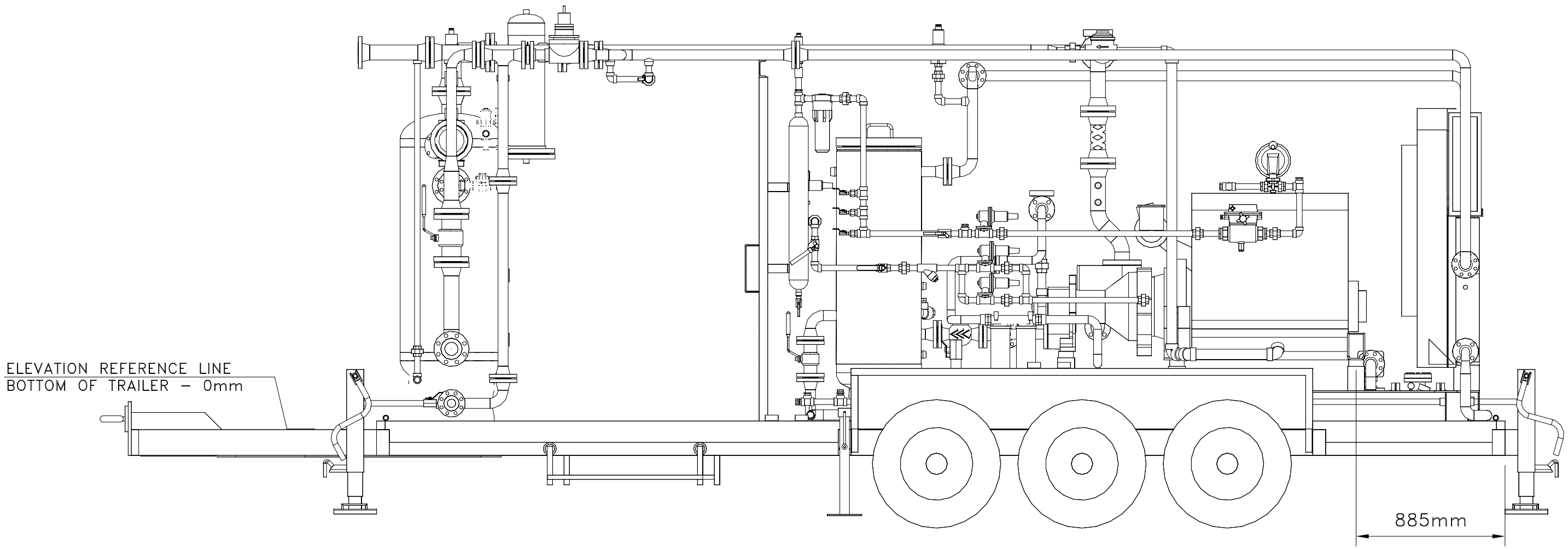

SIDE ELEVATION

REV.	DESCRIPTION	BY	DATE	CHKD	APPD
0	ISSUED FOR CONSTRUCTION	ASR	06-02-07	CAD	ENG

Jiro ENERFLEX
5221-46th St. Stettler Alberta Phone: 403.742.5538
Box 1450, T0C 2L2 Fax: 403.742.5539

7400 SERIES COMPRESSOR
G.D. SSM w/ 3306NA CAT ENGINE
TRAILER MOUNTED, SOUR SERVICE

Company:	JOB NO.:
PETRO CANADA	74162

Drawn by:	Checked by:	Approved by:	Date:	Scale:	Drawing NO.:	Rev.:
ASR			06-02-07	1:25	CDL-74162-B-02	0