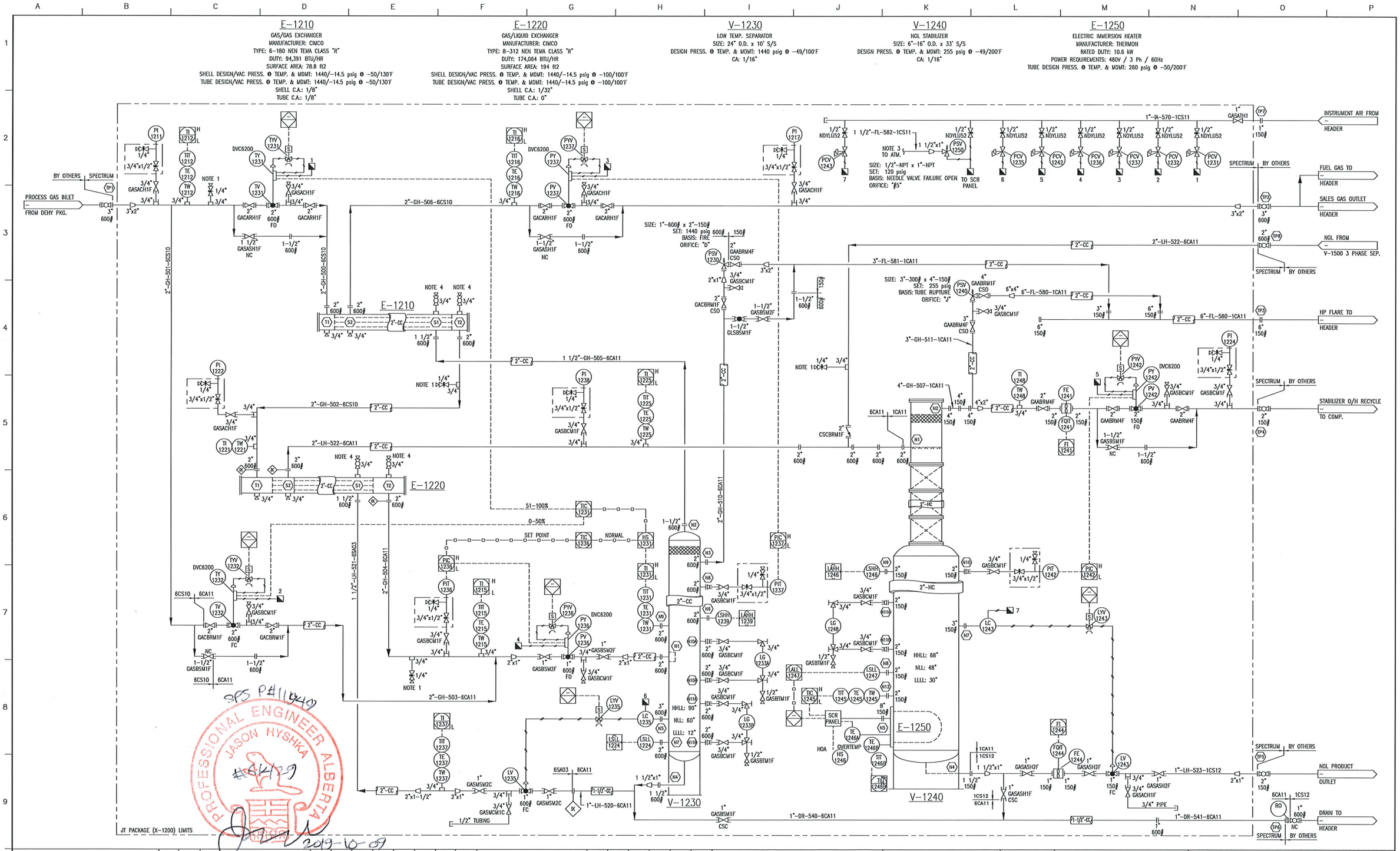

NOTES:
1. METHANOL INJECTION PORT.
2. Z PURGE PROTECTION FOR CONTROL PANEL.
3. VENT TO 10 FT. ABOVE SKID BASE.
4. SUPPLIED BY CIMCO.

No.	DATE	REVISIONS	BY	CHK	REW	APP	PM	QC
0	MAR 12, 2019	ISSUED FOR CONSTRUCTION	KN	RP	BB	BB	LS	
1	APR 18, 2019	RE-ISSUED FOR CONSTRUCTION	KN				LS	
2	JUN 20, 2019	REVISED AS PER CLIENT MARK-UPS	LG				DD	
3	SEP 11, 2019	AS-BUILT	VS					

No.	DATE	REVISIONS	BY	CHK	REW	APP	PM	QC

THIS DRAWING IS THE PROPERTY OF SPECTRUM PROCESS SYSTEM INC. AND LOANED TO THE RECIPIENT FOR HIS CONFIDENTIAL USE ONLY. IN CONSIDERATION OF THE LOAN OF THIS DRAWING, THE RECIPIENT PROMISES AND AGREES THAT IT SHALL NOT BE USED IN ANY WAY DETRIMENTAL TO THE INTEREST OF SPECTRUM PROCESS SYSTEM INC, THAT IT SHALL BE RETURNED UPON REQUEST, AND THAT IT SHALL NOT BE REPRODUCED, COPIED, LENT OR OTHERWISE DISPOSED OF DIRECTLY OR INDIRECTLY, NOR USED FOR ANY PURPOSE OTHER THAN THAT INTENDED WITHOUT THE WRITTEN PERMISSION OF SPECTRUM PROCESS SYSTEM INC.

		DATE
DRAWN BY	NAM NGUYEN	SEPT. 12, 2018
CHECKED BY	ROHIT PRAJAPATI	MAR. 14, 2019
REVIEWED BY	BAHER BINESH	MAR. 14, 2019
APPROVED BY	BAHER BINESH	MAR. 14, 2019
PM APPD. BY	LARRY SAVISKOFF	MAR. 14, 2019

SPECTRUM Process Systems

P.O. #

CLIENT: CHEVRON USA c/o SUMMIT
PROJECT: WILSON CREEK GAS PLANT JT SKID & NGL STABILIZER RIO BLANCO COUNTY
TITLE: PIPING AND INSTRUMENTATION DIAGRAM
MCBU DWG. No.

Scale	SPECTRUM JOB No.	SPECTRUM DWG No.	REV.
NTS	SPS-19-05364	19-05364-200-001	3

PLOTTED BY: Vitali Sibirkin ON 2019/10/08 @ 09:20:26 DRAWING FILE: Z:\Job Drawings\2019\19-05364 Chevron JT USA\200\19-05364-200.dwg PLOT SCALE: 1:57.49