NORTH VESSEL #2

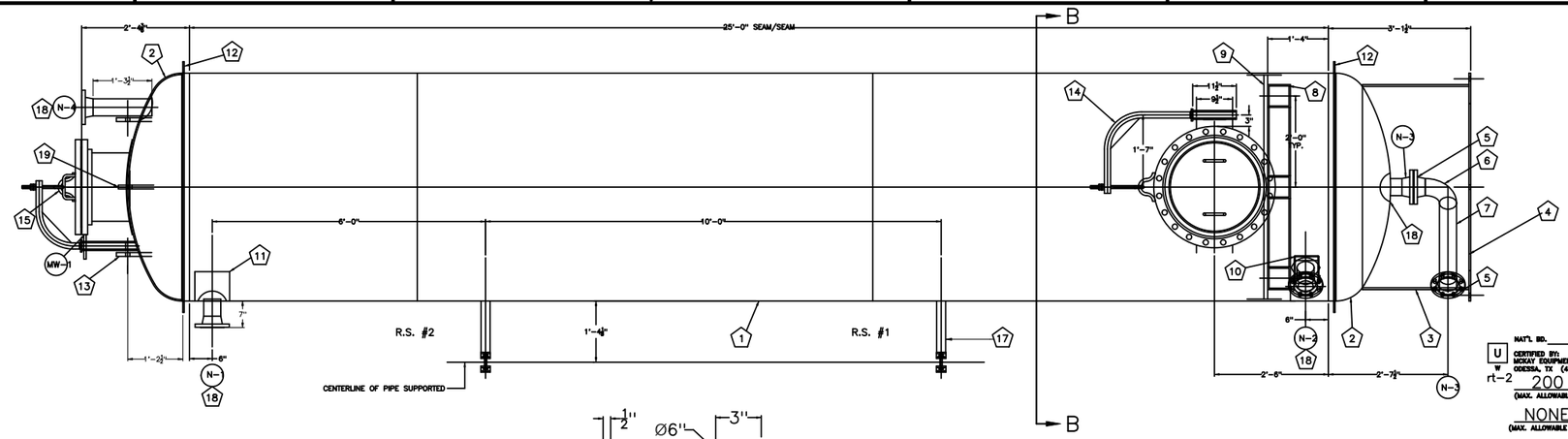

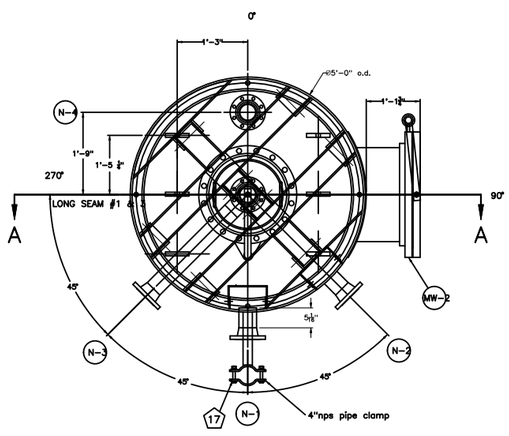

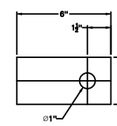

ITEM #16 (8 REQ.)

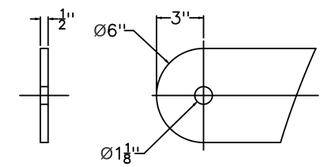

DETAIL ITEM #13 (4 REQ.)
SUPPORT BRACKETS

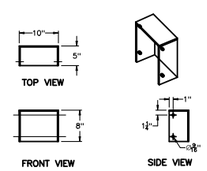

DETAIL #10

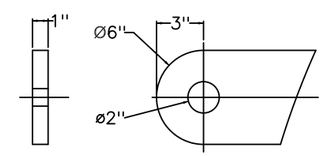

DETAIL ITEM #19 (2 REQ.)
LIFTING LUGS

NOTE: CUT FOUR (4) 12" MOUSE HOLES IN SKIRT @45°, 135°,225°, AND 315°

MARK	QTY	SERVICE	SIZE	RATING	TYPE	BORE	NECK SCH.	NECK WALL	NECK LG.	NECK MATERIAL	REINFORCING PAD O.D. & THK.	REINFORCING PAD MATERIAL	PROJ. O.S.	PROJ. I.S.	WELD DETAIL	WELD SIZE A	WELD SIZE B	WELD SIZE C	REMARKS
MW-2	1	MANWAY	24"	150#	RFSO	23.000	XH	.500	12.5	SA-106-B	ø34" x 1/2	SA-516-70	12"	FLSH	III	IX	1/4"	21/2"	
MW-1	1	MANWAY	18"	150#	RFSO	17.000	XH	.500	13.5	SA-106-B	ø27" x 3/8	SA-516-70	SEE DWG	FLSH	III	IX	3/8"	2 3/8"	
N-4	1	RELIEF	4"	150#	RFWN	3.624	120	.438	10.0	SA-106-B	ø8" x 3/8	SA-516-70	SEE DWG	.500	IV	VI	3/8"	2"	
N-3	1	DRAIN	4"	150#	RFWN	3.624	120	.438	10.0	SA-106-B	ø8" x 3/8	SA-516-70	7"	FLSH	IV	V		1/2"	
N-2	1	OUTLET	4"	150#	RFWN	3.624	120	.438	10.0	SA-106-B	ø8" x 3/8	SA-516-70	7"	.500	IV	VI	3/8"	2"	
N-1	1	INLET	4"	150#	RFWN	3.624	120	.438	9.500	SA-106-B	ø8" x 3/8	SA-516-70	7"	.500	IV	VI	3/8"	2"	

MARK	ZONE	DATE	BY	CHK'D	APP'D

REVISIONS

This drawing is the property of McKay Equipment Company in consideration of the use of this drawing, user agrees that it shall be treated as confidential material, that it shall be returned upon request, and that the contents thereof shall not be disclosed, reproduced, copied or otherwise disposed of directly or indirectly, nor shall it be used for any purpose other than that for which it is specifically furnished, except by written permission of McKay Equipment Company.

NUMBER	DESCRIPTION

REFERENCE DRAWINGS

BILL OF MATERIAL

MARK	QTY	DESCRIPTION OF MATERIAL	O.C. NOTE	MATERIAL
19	2	1" THK X 6" WIDE LIFTING LUGS (SEE DETAIL)	–	SA-36
18	4	3/8" x 4 3/4" id x 8" od repads	7	SA-516-70
17	2	2" X 16 1/8" SCH 80 PIPE, STAND OFF BRACE	–	SA106B/SA36
16	8	LADDER TABS – 3" x 1/2" THK FLAT BAR – SEE DETAIL	–	SA-36
15	1	DAVIT ARM – MCKAY STANDARD FOR 18" 150# OPENING	–	SA-36
14	1	DAVIT ARM – MCKAY STANDARD FOR 24" 150# OPENING	–	SA-36
13	4	1/2" THK x 6" WIDE SUPPORT BRACKETS (SEE DETAIL)	–	SA-36
12	2	INSULATION RINGS – ø66" OD x ø60 1/4 ID x 3/8 THK	–	SA-36
11	1	DEFLECTOR PLATE – MCKAY STANDARD	–	316SS
10	1	DEFLECTOR PLATE – FLOW INTO BOTTOM ONLY (see detail 10)	–	316SS
9	1	3/16" X 1" X 24" W X 20'L BAR GRATING (DETAIL D)	–	316SS
8	56	1" SQUARE TUBING x 3/8" THK. x CUT TO FIT – 15' TOTAL	–	316 SS
7	1	14" SCH 40 SMLS PIPE x 24" LG BOE	–	SA-106-B
6	1	14" SCH 40 LR WELD ELLS	–	SA-234-WPB
5	4	24" 150# RFWN SCH 40 BORE FLANGES	–	SA-105
4	1	1 1/2" THK x 60" OD x 44" ID BASE PLATE	–	SA-36
3	1	154" OD x 1/2" WT x 2'-4 1/16" LG SKIRT	–	SA-36
2	1	260" OD x .4194 MIN. WT 1/2" NOM 2:1 ELLIP. HD.	8	SA-516-70
1	1	60" OD x 1/2" WALL THK – 25'-0" LONG CYLINDER	8	SA-516-70

NOTES:
1. Flange bolt holes to straddle centerlines of vessel unless otherwise noted.
2. Drill and tap 1/4# Tell-tale hole in reinforcing pads.
3. Outside projection shown in nozzle schedule is from vessel O.D. unless otherwise noted.
4. Inside projection shown in nozzle schedule is minimum only.
5. All tote dimensions are from reference line.
6. All nozzles shall be adequately protected & covered for shipment.

Q.C. NOTES

7. MTR'S required
8. UCS-79 & UG-81 Compliance required
9. Any random length of pipe ordered must have the complete I.D. including the name or brand of mfg'r & vendor's name.

SPECIFICATIONS

MANUFACTURER MCKAY EQUIPMENT COMPANY
SERIAL NO. MK-2345 YEAR BUILT 2013
NATIONAL BD NO. 2336
VESSEL NO. ONE OF ONE
SERVICE GAS TREATING VESSEL
SIZE 60" OD x 25'-0" SEAM TO SEAM
DESIGN PRESSURE 200 PSIG
OPERATING PRESSURE 150 PSIG
DESIGN TEMPERATURE 200° F
OPERATING TEMPERATURE 100° F
TEST PRESSURE HYDRO TEST TO 260 PSIG
CORROSION ALLOWANCE 1/8"
X-RAY RT-2 STRESS RELIEVE NO
CODE ASME SECTION VIII DIV 2010 EDIT 2011 ADD.
MATERIAL HEADS SA-516-70
SHELL SA-516-70
JOINT EFFICIENCY 100%
WELDING PROCEDURE NO.90-01 SMAW – 90-05 SAW-FCAW-1
INSPECTION HSBI – CHEVRON – MFI
PAINTING SB. PRIME AND PAINT EXTERIOR
INSULATION INSULATION RINGS ONLY (2)
EST. SHIPPING WT. 15000# EMPTY
MDMT -20° F AT 200 PSIG
REMARKS: internal coating: enviroline 376f-60
50 mils min dft.
MATERIALS, FABRICATION AND FINISH TO MEET NACE STANDARD MR0175

MAT'L BD. 2336
U CERTIFIED BY: MCKAY EQUIPMENT COMPANY ODESSA, TX (432) 381-5510
W rt-2 200 PSIG @ 200 °F
(MAX. ALLOWABLE WORKING PRESSURE)
NONE PSIG @ NONE °F
(MAX. ALLOWABLE EXTERNAL WORKING PRESSURE)
-20 °F 200 PSIG
(MIN. DESIGN METAL TEMPERATURE)
SERIAL NUMBER MK-2345
WT. 15,000# YEAR BUILT 2013
SIZE 60" OD X 25'-0" 200# W.P. VERTICAL SULFA TREAT VESSEL
UNAUTHORIZED WELDING ON THIS VESSEL WILL VOID CODE STAMP

McKAY EQUIPMENT CO.
6337 WESTMOOR RD.
P.O. BOX 00040
ODESSA, TEXAS 79764
ASME CODE VESSELS
PIPE FABRICATIONS
PH. (432) 381-5510
FAX. (432)-381-5512

TITLE: 60" OD X 25'0' S/S 200# W.P. VERTICAL SULFA TREAT VESSEL

CUSTOMER: CHEVRON U.S.A. MIDLAND, TEXAS

SCALE: NONE	W.O. 8195
DATE: 5-1-13	P.O. 0011178845
DRAWN BY: DV	DWG. NUMBER
APPROVED: TC (5-9-13)	8195-01

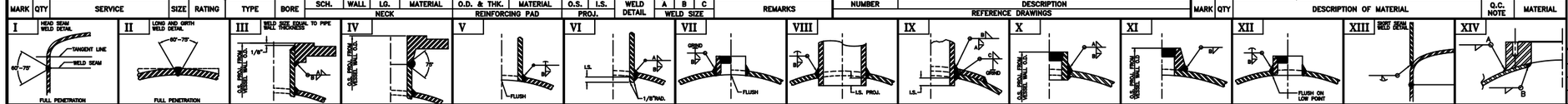

WLCRK-WCGP-MEC-DTL-MCB-0007 RELEASED on 7/19/2018 1:48:06 PM. System of Record is Go.Chevron.com/OpsDocs