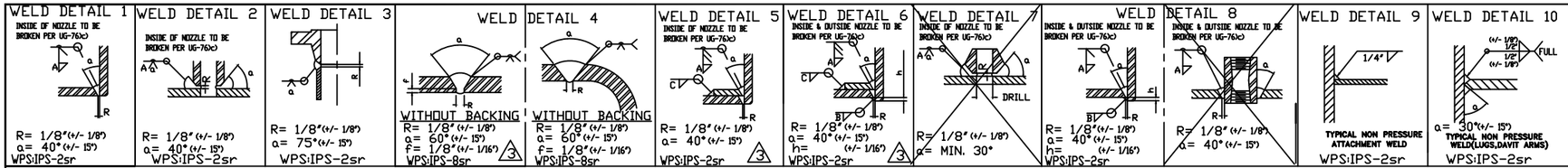

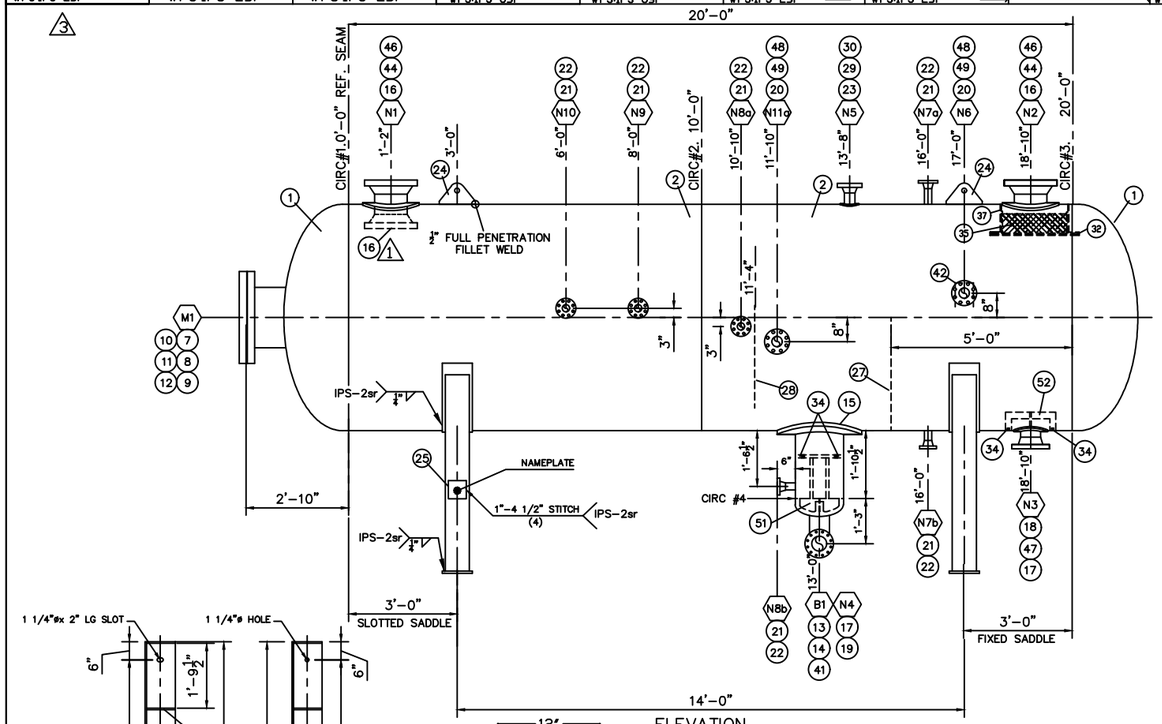

ELEVATION

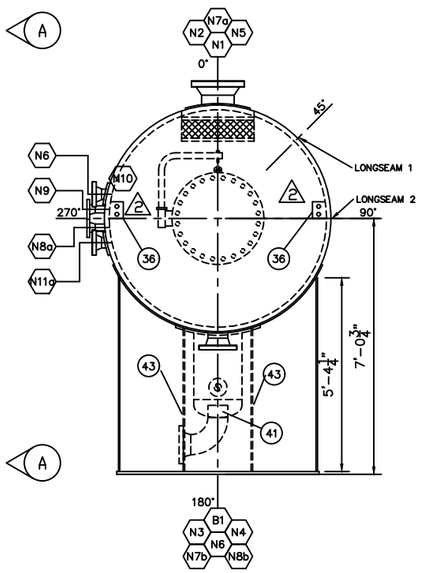

END VIEW "A-A"

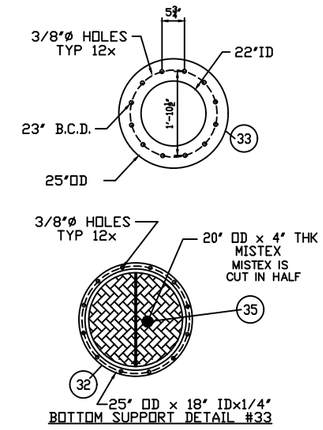

BOTTOM SUPPORT DETAIL #33 FOR MISTEX

N.T.S.

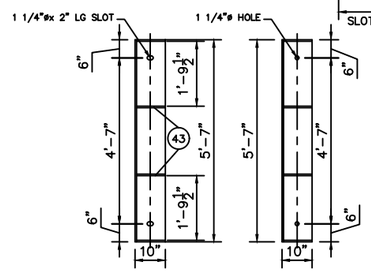

SLIDING BASE PLATE

FIXED BASE PLATE

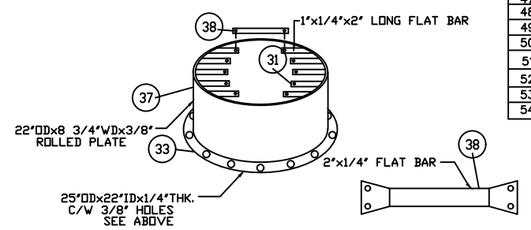

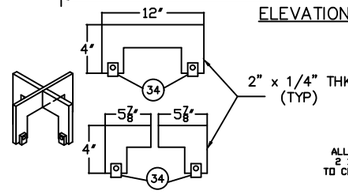

REMOVABLE VORTEX BREAKERS DETAIL #52

N.T.S.

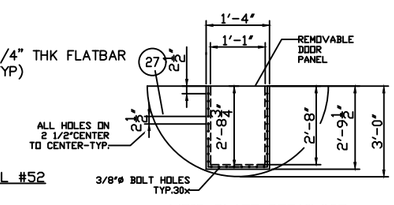

WEIR PLATE DETAIL#27

N.T.S.

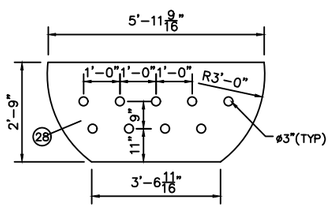

SURGE BAFFLE DETAIL

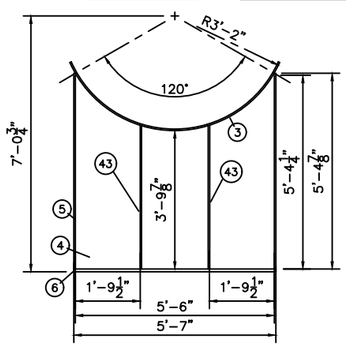

SADDLE DETAIL

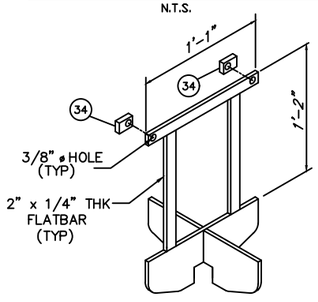

REMOVABLE VORTEX BREAKER DETAIL#51

N.T.S.

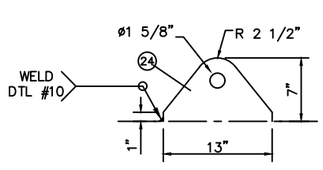

LIFT LUG#24

N.T.S.

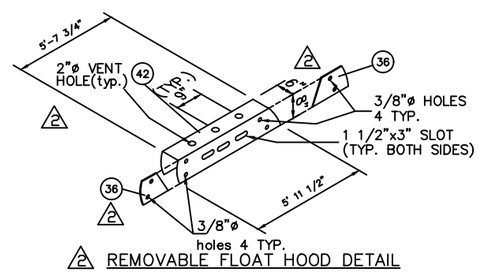

REMOVABLE FLOAT HOOD DETAIL

BILL OF MATERIAL

ITEM	QTY.	DESCRIPTION	MATERIAL
1	2	Heads – 72"IDx 1 1/2" nom(1.4375" MIN) 2:1 S.E.c/w 2" S.F	SA516–70N
2	2	Shell – 72"ID. x 1 1/2" nom. x 10'–0" S/S	SA516–70N
3	2	Wear Plate – 10" x 3/8" x 88" Long	SA516–70N
4	2	Face Plate –5'–7" Wide x 5'–4 1/4" Long x 1/2" Thick	CSAG40.21 44W
5	4	Side Plate – 8" x 5'–4 1/4" Long x 1/2"Thick	CSAG40.21 44W
6	2	Base Plate – 10" x 67" x 7/8" Thick	CSAG40.21 44W
7	1	FVC Flange – 18" 300# RFHB c/w (18"ID x 2.375" WALL)x18"LG	SA–105–N
8	1	Blind Flange–18"300# RF	SA–105–N
9	1	Davit Arm – 18" 300 #	SA516–70N
10	1	Flex Gasket – 18" 300#	316SS
11	24	Studs – 1 1/4"ø x 7 3/4"LG	SA193–B7M
12	48	Nuts – 1 1/4"ø	SA194–2HM
13	1	Pipe – 16" sch 100 SMLS x 2'–3" Long –C.T.S.	SA–106B
14	1	Head – 16"OD x 1"NOM.(0.900"MIN)2:1 S.E.c/w 2" S.F.	SA516–70N
15	1	Repad – 27 1/2"OD. x 16 1/8"IDx1 1/4" Thick (Rolled to 75"ID)	SA516–70N
16	3	Flange – 10" 300# RFWN c/w SCH.160 BORE	SA–105–N
17	2	Flange – 6" 300# RFWN c/w SCH.XXH BORE	SA–105–N
18	1	PIPE: 6" SCH. XXH x 6" LG SMLS PIPE	SA–106B
19	1	BW 90° EL – 6" sch XXH LR	SA234–WPB
20	2	Flange – 3" 300# RFWN c/w SCH.XXH BORE	SA–105–N
21	6	Flange – 2" 300# RFWN c/w SCH.160 BORE	SA–105–N
22	6	PIPE: 2" SCH. 160 x 6" LG SMLS PIPE	SA106B
23	1	Flange – 4" 300# RFWN c/w SCH.XXH BORE	SA–105–N
24	2	Lift Lug – 1 1/2" Thick Plate (See Detail)	SA516–70N
25	1	Vessel Name Plate c/w Mounting Bracket	SS/SA36
26			
27	1	Weir – 3/8" Plate (See Detail)	SA36
28	1	Surge Baffle – 3/8" Plate (See Detail)	SA36
29	1	PIPE: 4" SCH. XXH x 4" LG SMLS PIPE	SA–106B
30	1	Repad – 8 1/2"OD. x 4 5/8"IDx 7/8" Thick (Rolled to 75"ID)	SA516–70N
31	8	FLAT PLATE TABS : 1"x2" x 1/4" THK	CSAG40.21 44W
32	4	BOT. SUPPORT PLATE: 25"OD x 18"ID x 1/4"THK PLATE	SA–36
		c/w EXP. METAL: 1/2" THK x3 POUNDS/FOOT – C.T.S	SA–36
33	1	MISTEX SUPPORT PLATE: 25" OD x 22" ID x 1/4" THK x 12 1/2" WD PLATE	CSAG40.21 44W
34	8	FLAT PLT: 1" WD x 2" LG x 1/4" THK–C.T.S. – SEE VORTEX DETAIL	CSAG40.21 44W
35	1	MISTEX PAD: 20" OD x 6" THK x 9 LBS/CU. FT.–SEE DETAIL	316 S.S.
36	2	FLAT PLT: 1" x 8" x 1/4" THK c/w TWO(2) 3/8" HOLES – SEE FLOAT HOOD DETAIL	CSA–G40.21 44W
37	1	PLATE: ROLLED TO 22"O.D. x 10 1/2"WD x 3/8"THK	SA516–70N
38	5	FLAT BAR: 1" WD x 1/4" THK–C.T.S.	CSA–G40.21 44W
41	1	PIPE: 6" SCH. XXH x 1" LG SMLS PIPE	SA–106B
42	1	Float Hood – 1/4" Plate (Removable) (See Detail)	CSA–G40.21 44W
43	4	Saddle Rib Plate– 1/2" Thk x 3'–11 1/2" Long x 8" Wide	CSA–G40.21 44W
44	2	PIPE: 10" SCH. 160 x 8" LG SMLS PIPE	SA–106B
46	2	Repad – 17 1/2"OD. x 10 7/8"IDx 1" Thick (Rolled to 75"ID)	SA516–70N
47	1	Repad – 10 5/8"OD. x 6 3/4"IDx 1" Thick (Rolled to 75"ID)	SA516–70N
48	2	Repad – 7 1/2"OD. x 3 5/8"IDx 3/4" Thick (Rolled to 75"ID)	SA516–70N
49	2	PIPE: 3" SCH. XXH x 7" LG SMLS PIPE	SA–106B
50			
51	1	REMOVEABLE VORTEX BREAKER: 1/4" FLATPLATE – SEE DETAIL	SA–36
52	1	REMOVEABLE VORTEX BREAKER: 2"WD x 1/4"THK FLATPLATE – SEE DETAIL	CSAG40.21 44W
53			
54			

REFERENCE DWG: DMV–72H–720 Rev.0
C.T.S– CUT TO SUIT
WPS: IPS–2sr (NOZZLES & TACKS)
IPS–2sr (LONGSEAM, CIRCS& REPAIRS)
ALL CATEGORY 'D' WELDS ARE TO BE UT'd
ALL SA–516–70N & FVC MAT'L ARE 'FINE GRAIN PRACTICE'
IMPACT TESTING COUPON IS DONE WITH SHELL WELD

NOZZLE SCHEDULE

NOZ No.	SIZE REQ'D	RATING	NOZ. SCHED.	SERVICE	PROJECTION OUTSIDE	PROJECTION INSIDE	REINFORCING PAD OD x THK	WELD DETAIL	FILLET WELD SIZE A	FILLET WELD SIZE B	FILLET WELD SIZE C	LOCATION
M1	18"	300#	RFHB	MANWAY	AS SHWN	1 1/2"	–	8	3/4"	5/8"	–	HEAD
B1	16"	300#	100	BOOT	22 1/2"	GF	27 1/2"x1 1/4"	5 & 4	1"	–	5/8"	SHELL
N1	10"	300#	160	INLET	8"	2"	17 1/2"x 1"	6 & 3	1/2"	–	5/8"	SHELL
N2	10"	300#	160	OUTLET	8"	SF	17 1/2"x 1"	5 & 3	1/2"	–	5/8"	SHELL
N3	6"	300#	XXH	OIL	8"	GF	10 5/8" x 1"	5 & 3	5/8"	–	9/16"	SHELL
N4	6"	300#	XXH	WATER	AS SHWN	–	–	1 & 3	3/8"	–	–	BOOT HEAD
N5	4"	300#	XXH	PSV	8"	SF	8 1/2"x7/8"	5 & 3	3/4"	–	9/16"	SHELL
N6	3"	300#	XXH	SPARE	8"	SF	7 1/2"x 3/4"	5 & 3	3/4"	–	1/2"	SHELL
N7a	2"	300#	160	HC BRIDLE	6"	SF	–	1 & 3	3/8"	–	–	SHELL
N7b	2"	300#	160	HC BRIDLE	6"	GF	–	1 & 3	3/8"	–	–	SHELL
N8a	2"	300#	160	H_2O BRIDLE	6"	SF	–	1 & 3	3/8"	–	–	SHELL
N8b	2"	300#	160	H_2O BRIDLE	6"	SF	–	1 & 3	3/8"	–	–	BOOT SHELL
N9	2"	300#	160	TI	6"	SF	–	1 & 3	3/8"	–	–	SHELL
N10	2"	300#	160	PI	6"	SF	–	1 & 3	3/8"	–	–	SHELL
N11a	3"	300#	XXH	SPARE	8"	SF	7 1/2"x 3/4"	5 & 3	3/4"	–	1/2"	SHELL

DESIGN DATA

DESIGN AND FABRICATE TO ASME CODE, SECTION VIII DIV. 1 2001, EDITION, 2003 ADDENDA
DESIGN PRESSURE & TEMPERATURE: 720 PSIg AT 100°F
MDMT:–20°F AT 720 PSIg RADIOGRAPHY: CIRCS & LONG SEAMS–FULL PER UW–11a
IMPACT TESTS:AS PER UG–84 @ –20°F NOZZLES ARE IMPACT TEXT EXEMPT AS PER UG–20(f)1–5 UCS–66/UCS–66(b)(1)(b)/UCS–66(b)(2) PWHT:YES FOR 90 MIN. @ 1150°F
HYDROSTATIC TEST PRESSURE 1080 PSIg (1.5x DESIGN PRESSURE) PREHEAT:200°F
CORROSION ALLOWANCE: 1/8" HEAD MINIMUM THICKNESS: 1.4375"
WEIGHT EMPTY: 33275 LBS (20'–0"s/s) WEIGHT FULL OF WATER: 72900 LBS
CAPACITY: 635 cu.ft.

CALC PKG REV.LEVEL	REV. CALCS REQ'D	REV.	DESCRIPTION	BY	DD	PC	QC	DATE
1	NO	3	AS BUILT – REV. ITEMS 4,5,6,31,38,43,37, WPS, CAP, IMPACTS	PP	CP	DH	·	04–08–04
1	NO	2	REV FLOAT SHIELD DETAIL#42 & 36	CP	CP	DH	CK	04–07–14
1	NO	1	ADD 10"FLANGE TO INLET, DELETE #26, CATEGORY 'D' TO UT'd	CP	CP	DH	CK	04–06–23
1	YES	0	ISSUED FOR CONSTRUCTION	PP	CP	DH	CK	04–05–13

IPS
MANUFACTURING LIMITED

DATE	04–05–13
DESIGNED BY	IPS
DRAWN BY	P. PIOT
CHECKED BY	
APPROVED BY	
SCALE	N.T.S.
CLIENT	ARISTAR CORPORATION
TITLE	HORIZONTAL VESSEL DRAWING 72"ID x 20'–0" S/S MAWP 720 PSIg @ 100°F, 1/8" C.A.
PROJECT NO.	2605–001
FILENAME	2605–001
CRN NO.	P–9308.213
SHEET NO.	1 OF 1
DRAWING NO.	V–2605–001
REV. NO.	3