PLOT DATE: 25 FEB 03

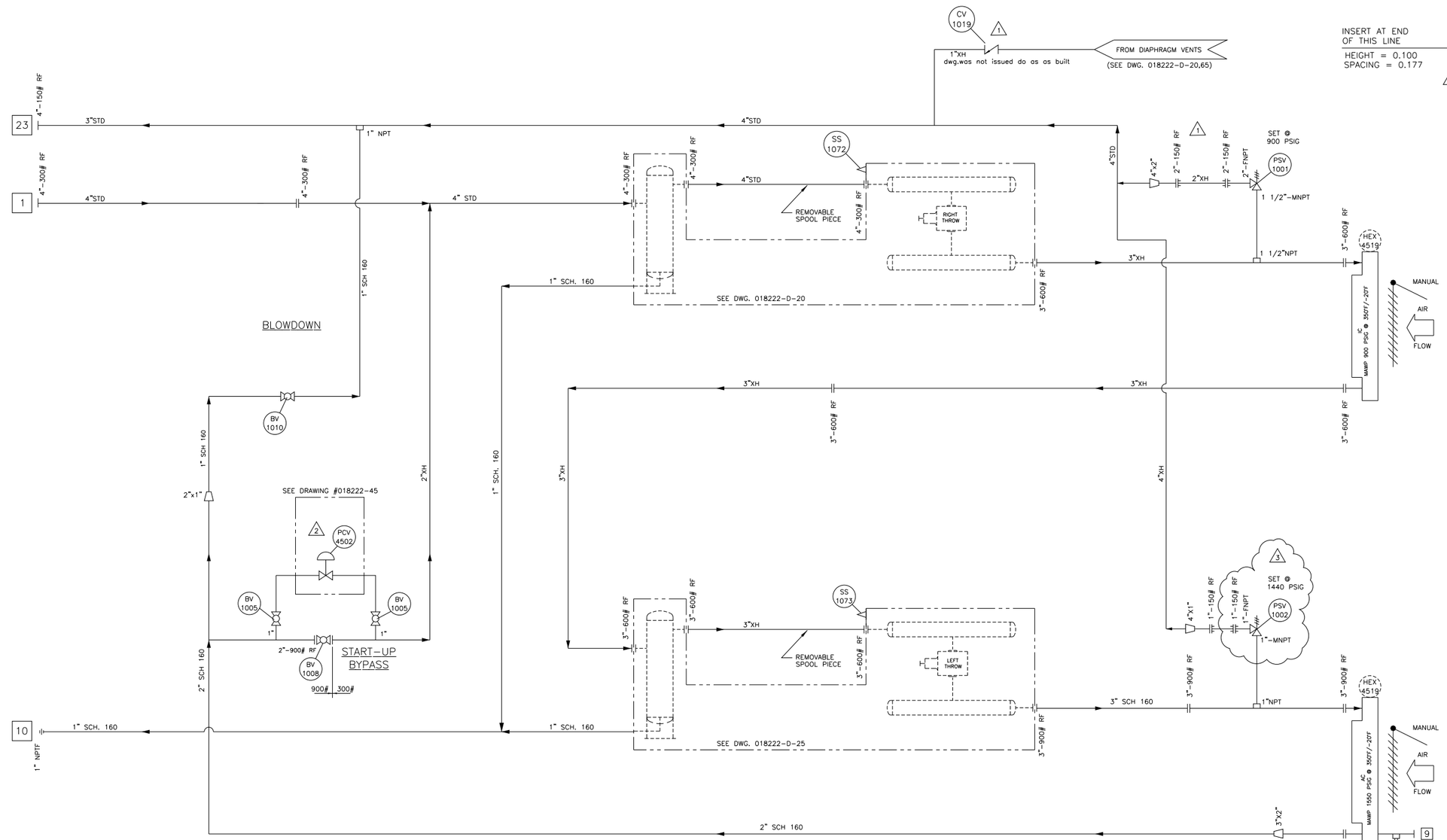

BILL OF MATERIAL

NOTE: ITEM No. = FIRST TWO DIGITS (Work Center), LAST TWO DIGITS (Item No.)

ITEM	PART NO.	TOTAL QUANTITY	DESCRIPTION	REV
1001	813-4893	1.00 EA	VALVE,RELIEF,TAYLOR,900-PSI,	
			MODEL 8200-2-G, NACE	
			1.5"MNPT X 2"FNPT,CS BODY	
			SS TRIM	
1002	813-4875	1.00 EA	VALVE,RELIEF,TAYLOR,82-E835134	
			MODLE 8200,NACE,SS TRIM	
			1"MNPT X 1"FNPT,1201-1600 PSI	
			1/2"ORIFICE,-20/400F,CS BODY	
			SET @ 1440 PSIG	
1005	813-7218	2.00 EA	VALVE,BALL,SCR,1-2000,MERID,	
			R PORT,LOCKING HANDLE,NACE,	
			MODEL M22CR	
1008	808-7449	1.00 EA	VALVE,BALL,2-900,RF,NUTRON,	
			R.PORT,NACE,MODEL# T3-R20R15S	
1010	807-6913	1.00 EA	VALVE,BALL,SCR,1-2000,APOLLO,	
			R.PORT,NACE,MODEL# 73-165-01	
			WHEATLEY,NACE, #820-013216-131	
1072	809-7110	1.00 EA	SCREEN,SUCTION,316SS,4-300,RF,	
			150%,CONE,STD/XH PIPE	
1073	809-7880	1.00 EA	SCREEN,SUCTION,316SS,3-600,RF,	
			150%,CONE,STD/XH PIPE	

CUSTOMER CONNECTIONS

TAG	DESCRIPTION	SIZE	TAG	DESCRIPTION	SIZE
1	STAGE ONE INLET	4"-300# RF			
9	FINAL DISCHARGE	3"-900# RF			
10	SCRUBBER DRAIN HEADER	1" NPTF			
23	PSV HEADER (1)	4"-150# RF			

GENERAL NOTES

1. PROCESS INSTRUMENT LINES: 316SS TUBING c/w 3/8" 316SS SWAGELOK FITTINGS & 316SS FERRULES.
2. UTILITY INSTRUMENT LINES: 316SS TUBING c/w 3/8" 316SS SWAGELOK FITTINGS & 316SS FERRULES.
3. INSTRUMENT MEDIUM: CLEAN DRY GAS (UPTO 1.5% H2S CONTENT)
4. ALL PIPING 2" AND UNDER TO BE XH MINIMUM.
5. ALL FITTINGS TO BE 6000# RATING UNLESS OTHERWISE NOTED.
6. CORROSION ALLOWANCE: 1/8"
7. AREA CLASSIFICATION: CLASS 1, DIVISION 2
8. CONDUIT TYPE: ALUMINUM
9. INSTRUMENT TAGS REQUIRED: ☐YES ☒NO
10. SURFACE PREPARATION: SSPC SP2
11. PAINT (1) COATS: UC STD HIGH SOLIDS EPOXY (WARM GREY)

STAMP AREA

THIS DOCUMENT IS SUPPLIED IN CONFIDENCE. REPRODUCTION OR DISTRIBUTION IN WHOLE OR PART WITHOUT THE WRITTEN PERMISSION OF UNIVERSAL COMPRESSION INC. IS STRICTLY PROHIBITED.

REV.	BY	CHK'D	REVISION DESCRIPTION	DATE
3	KMB		CHANGED STG.#2 PSV SETTING TO 9700 kPa	25 FEB 03
2	KMB	BM	ADDED AUTO SPEED / BYPASS	21 FEB 03
1	MD	BM	AS BUILT	18 DEC 01
0	MD	BM	ISSUED FOR FABRICATION	13 NOV 01

UNIVERSAL® COMPRESSION
4949 – 76th Avenue S.E.
P.O. Box 5308, Station 'A'
Calgary, Alberta, Canada T2H 1X6
403/236-5252 Main
800/661-5252 Toll Free
403/236-4261 Fax

TITLE: PROCESS & INSTRUMENT DIAGRAM
AJAX DPC-2202, AMERCOOL 72VCI, 2 THROW, 2 STAGE
NATURAL GAS COMPRESSOR PACKAGE (UP TO 5% SOUR)

END USER/CONSULTANT: LEASE FLEET
CUST. P.O. No.: –
LOCATION: TBA
LSD: TBA
REVISION: 3
DWG. REFERENCE: 998188-D-10 (REV.0)

DRAWN:	DGD	W.O. No.	018222
DATE:	01 FEB 00	UNIT No.	–
CHK'D:	B.MINSHULL	No. REQ'D:	ONE(1)
PROJ. MGR	B.MINSHULL	SCALE:	N.T.S.

DWG. No. 018222-D-10
(SHEET 1 OF 1)

CAD FILE: M:\WO\018222\P&ID\018222-10.DWG

PLOT DATE: 12 FEB 02

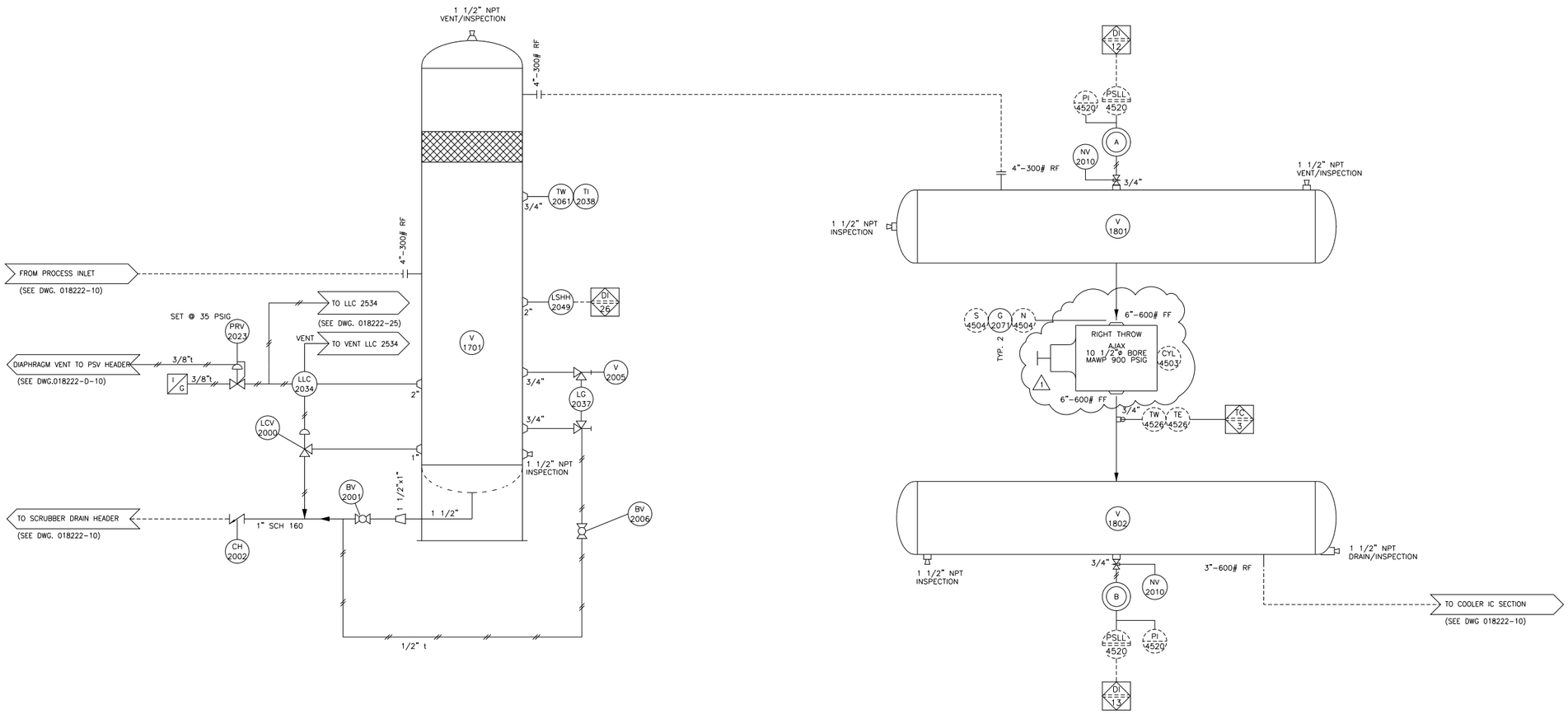

INSERT AT END OF THIS LINE

HEIGHT = 0.100
SPACING = 0.177

BILL OF MATERIAL

NOTE: ITEM No. = FIRST TWO DIGITS (Work Center), LAST TWO DIGITS (item No.)

ITEM	PART NO.	TOTAL QUANTITY	DESCRIPTION	REV
1701	813-5715	1.00 EA	SCRUBBER,160DX60,	
			DESIGN TEMP: 300 F	
			DESIGN PRESS: 595 PSIG	
			MDMT: -20 F @ 595 PSIG	
			CA: 0.125"	
			N1: 4"-300# RFWN	
			N2: 4"-300# RFWN	
			CRN: L-6719.213	
1801	813-5727	1.00 EA	BOTTLE,SUCT,180DX48,	
			DESIGN TEMP: 300 F	
			DESIGN PRESS: 595 PSIG	
			MDMT: -20 F @ 595 PSIG	
			CA: 0.125"	
			N1: 4"-300# RFWN	
			N2: 6"-600# RFWN	
			CRN: L-6721.213	
1802	813-5733	1.00 EA	BOTTLE,DISCH,160DX48,	
			DESIGN TEMP: 350 F	
			DESIGN PRESS: 1170 PSIG	
			MDMT: -20 F @ 1170 PSIG	
			CA: 0.125"	
			N1: 6"-600# RFWN	
			N2: 3"-600# RFWN	
			CRN: L-6722.213	
2000	813-4209	1.00 EA	VALVE,DUMP,MURPHY,DV850,SOUR	1
2001	807-6913	1.00 EA	VALVE,BALL,SCR,1-2000,APOLLO,	
			R.PORT,NACE,MODEL# 73-165-01	
2002	807-6005	1.00 EA	VALVE,CHECK,LIFT,SCR,1-800,*	
			NEWCO,NACE,MODEL# 48T-LF2-43	
2005	810-0163	1.00 EA	VALVE,GAUGE,SET,PENBERT,330J*	
			NACE,PENBERTHY P/N 64810-550	
			0.5"NPTF(RIGID) - GAUGE CONN,	
			0.75"NPTM - VESSEL CONN,	
			0.5"NPTF - VENT-DRAIN CONN,	
2006	807-6938	1.00 EA	VALVE,BALL,SCR,0.5-2000,APOLL*	
			R.PORT,NACE,MODEL# 73-163-01	
2010	813-5928	2.00 EA	VALVE,NEEDLE,CM2-1-M64T-D-N-T*	
			CENTURY,0.75"MX0.5"F,316SST-	
			NACE,TEFLON,PACKED	
2023	812-0568	1.00 EA	REGULATOR,FISHER,67CFR-N224,	1
			1/4" NPT,0-35PSI,VENT.CAP,SOUR	
2034	813-5202	1.00 EA	CONTROL,LEVEL,NORRISEAL,1005P, 2	
			PNEUMATIC,1500 PSIG,MAX 250 F	
			INSTAL 1/2" COUPLING,NACE	
2035	813-6384	2.00 EA	GAUGE,PRESSURE,0-60PSI,FISHER,	REV.2
			1.5",FACE,1/8"CENTRE,BACK	
			CONNECTION,	
			MODEL#11B4036X022	
2037	808-7886	1.00 EA	GAUGE,LEVEL,PENBERTHY,1RM7,	
			NACE	
2038	804-0246	1.00 EA	GAUGE,TEMP,0-250F,TREND,33040*	
			DUAL SCALE,304SS,3"DIAL,4"STEM	
			BACK CONNECTED,NO RESET	
2049	807-6898	1.00 EA	SWITCH,LEVEL,MURPHY,L1200SS-SF	
			NACE-SS BODY & FLOAT, 2"NPT	
2061	803-0268	1.00 EA	THERMOWELL,0.75X0.50X4,	
			0.260" BORE,316SS	
			2.5" INSERTION LENGTH.	
2071	800-2147	2.00 EA	GASKET,6-600FF,PENPAK,**	
			DURABLA HH-P-46 CLASS 1	

CAD FILE: M:\WO\018222\P&ID\018222-20.DWG

CUSTOMER CONNECTIONS

TAG	DESCRIPTION	SIZE	TAG	DESCRIPTION	SIZE
-	-	-			

GENERAL NOTES

1. SEE DWG. 018222-D-10 FOR NOTES.

STAMP AREA

THIS DOCUMENT IS SUPPLIED IN CONFIDENCE. REPRODUCTION OR DISTRIBUTION IN WHOLE OR PART WITHOUT THE WRITTEN PERMISSION OF UNIVERSAL COMPRESSION INC. IS STRICTLY PROHIBITED.

REV.	BY	CHK'D	REVISION DESCRIPTION	DATE
1	MD		STG.#1 CYL. REVISED TO 10.5" (WAS9.5")	12 FEB 02
0	MD	BM	ISSUED FOR FABRICATION	13 NOV 01

UNIVERSAL® COMPRESSION
4949 - 76th Avenue S.E.
P.O. Box 5308, Station 'A'
Calgary, Alberta, Canada T2H 1X6
403/236-5252 Main
800/661-5252 Toll Free
403/236-4261 Fax

TITLE: STAGE ONE PRESSURE VESSEL SYSTEM
AJAX DPC-2202, AMERCOOL 72VCI, 2 THROW, 2 STAGE
NATURAL GAS COMPRESSOR PACKAGE (UP TO 5% SOUR)

END USER/CONSULTANT: LEASE FLEET
CUST. P.O. No.: -
LOCATION: TBA
LSD: TBA
REVISION: 1
DWG. REFERENCE: 998188-D-20 (REV.0)

DRAWN:	DGD	W.O. No.	018222
DATE:	01 FEB 00	UNIT No.	-
CHK'D:	B.MINSHULL	No. REQ'D:	ONE(1)
PROJ. MGR:	B.MINSHULL	SCALE:	N.T.S.

DWG. No. 018222-D-20
(SHEET 1 OF 1)

PLOT DATE: 13 NOV 01

CAD FILE: M:\WO\018222\P&ID\018222-25.DWG

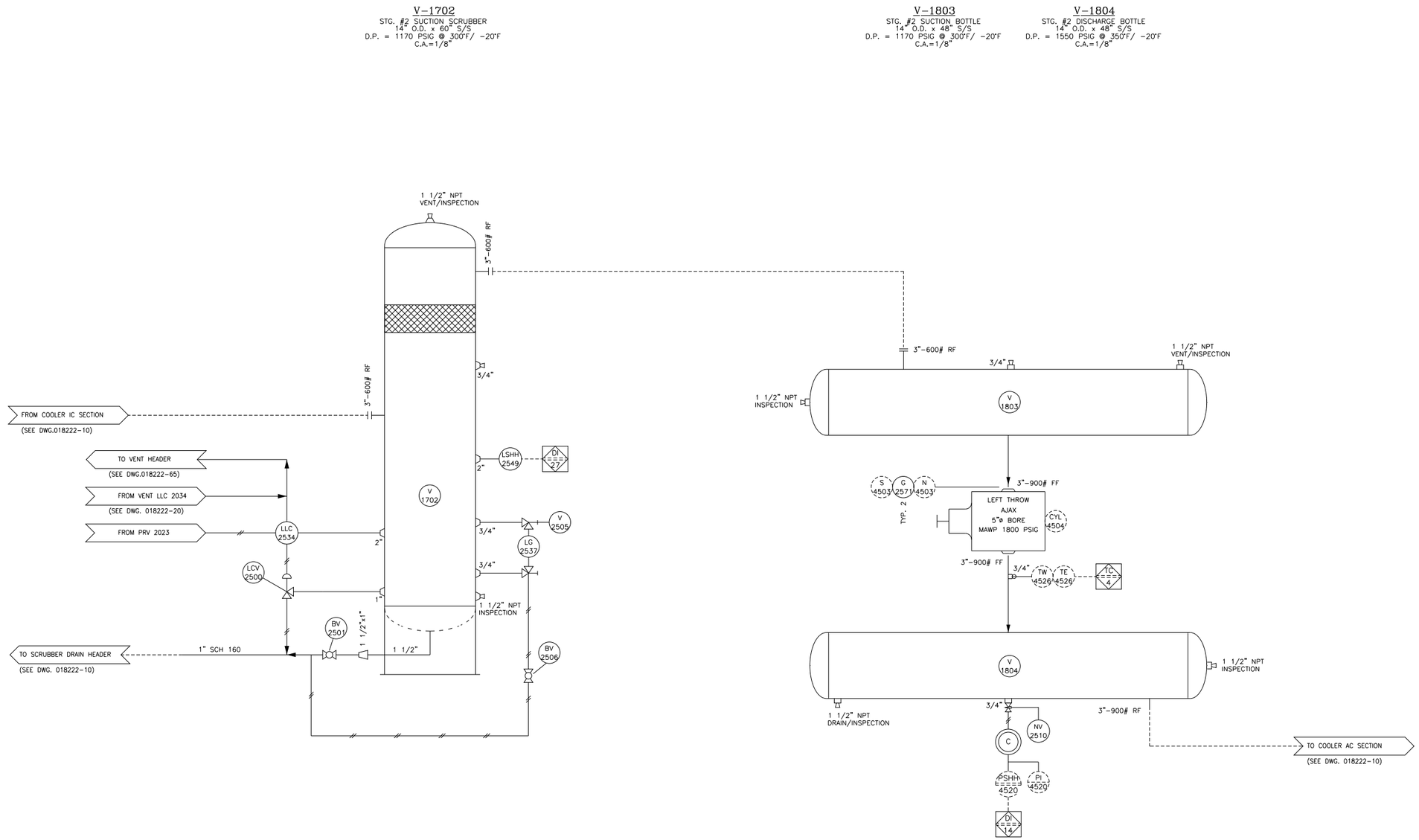

BILL OF MATERIAL

NOTE: ITEM No. = FIRST TWO DIGITS (Work Center), LAST TWO DIGITS (item No.)

INSERT AT END OF THIS LINE
HEIGHT = 0.100
SPACING = 0.177

ITEM	PART NO.	TOTAL QUANTITY	DESCRIPTION	REV
1702	813-5721	1.00 EA	SCRUBBER,14ODX60,	1
			DESIGN TEMP: 300 F	
			DESIGN PRESS: 1170 PSIG	
			MDMT: -20 F @ 1170 PSIG	
			CA: 0.125"	
			N1:3"-600# RFWN	
			N2:3"-600# RFWN	
			CRN: L-6720.213	
1803	813-5739	1.00 EA	BOTTLE,SUCT,14ODX48,	1
			DESIGN TEMP: 300 F	
			DESIGN PRESS: 1170 PSIG	
			MDMT: -20 F @ 1170 PSIG	
			CA: 0.125"	
			N1: 3"-600# RFWN	
			N2: 3"-900# RFWN	
			CRN: L-6723.213	
1804	813-5745	1.00 EA	BOTTLE,DISCH,14ODX48,	1
			DESIGN TEMP: 350 F	
			DESIGN PRESS: 1550 PSIG	
			MDMT: -20 F @ 1550 PSIG	
			CA: 0.125"	
			N1: 3"-900# RFWN	
			N2: 3"-900# RFWN	
			CRN: L-6724.213	
2500	813-4209	1.00 EA	VALVE,DUMP,MURPHY,DV850,SOUR	1
2501	807-6913	1.00 EA	VALVE,BALL,SCR,1-2000,APOLLO,	
			R.PORT,NACE,MODEL# 73-165-01	
2505	810-0163	1.00 EA	VALVE,GAUGE,SET,PENBERT,330J*	
			NACE,PENBERTHY P/N 64810-550	
			0.5"NPTF(RIGID) - GAUGE CONN,	
			0.75"NPTM - VESSEL CONN,	
			0.5"NPTF - VENT-DRAIN CONN,	
2506	807-6938	1.00 EA	VALVE,BALL,SCR,0.5-2000,APOLL*	
			R.PORT,NACE,MODEL# 73-163-01	
2510	813-5928	1.00 EA	VALVE,NEEDLE,CM2-1-M64T-D-N-T*	
			CENTURY,0.75"MX0.5"F,316SST-	
			NACE,TEFLON,PACKED	
2534	813-5202	1.00 EA	CONTROL,LEVEL,NORRISEAL,1005P, 2	
			PNEUMATIC,1500 PSIG,MAX 250 F	
			INSTAL 1/2" COUPLING,NACE	
2535	813-6384	2.00 EA	GAUGE,PRESSURE,0-60PSI,FISHER,	REV.2
			1.5",FACE,1/8"CENTRE,BACK	
			CONNECTION,	
			MODEL#11B4036X022	
2537	808-7886	1.00 EA	GAUGE,LEVEL,PENBERTHY,1RM7,	
			NACE	
2549	807-6898	1.00 EA	SWITCH,LEVEL,MURPHY,L1200SS-SF	
			NACE-SS BODY & FLOAT, 2"NPT	
2571	813-5934	2.00 EA	GASKET,3-900FF,PENPAK,**	
			DURABLA HH-P-46 CLASS 1	

CUSTOMER CONNECTIONS

TAG	DESCRIPTION	SIZE	TAG	DESCRIPTION	SIZE
-	-	-			

GENERAL NOTES

1. SEE DWG 018222-D-10 FOR NOTES.

STAMP AREA

THIS DOCUMENT IS SUPPLIED IN CONFIDENCE. REPRODUCTION OR DISTRIBUTION IN WHOLE OR PART WITHOUT THE WRITTEN PERMISSION OF UNIVERSAL COMPRESSION INC. IS STRICTLY PROHIBITED.

REV.	BY	CHK'D	REVISION DESCRIPTION	DATE
0	MD		ISSUED FOR FABRICATION	13 NOV 01

UNIVERSAL® COMPRESSION
4949 - 76th Avenue S.E.
P.O. Box 5308, Station 'A'
Calgary, Alberta, Canada T2H 1X6
403/236-5252 Main
800/661-5252 Toll Free
403/236-4261 Fax

TITLE: STAGE TWO PRESSURE VESSEL SYSTEM
AJAX DPC-2202, AMERCOOL 72VCI, 2 THROW, 2 STAGE
NATURAL GAS COMPRESSOR PACKAGE (UP TO 5% SOUR)

END USER/CONSULTANT: LEASE FLEET
CUST. P.O. No.: -
LOCATION: TBA
LSD: TBA
REVISION: 0
DWG. REFERENCE: 998188-D-25 (REV.0)

DRAWN:	DGD	W.O. No.	018222
DATE:	02 FEB 00	UNIT No.	-
CHK'D:	B.MINSHULL	No. REQ'D:	ONE(1)
PROJ. MGR:	B.MINSHULL	SCALE:	N.T.S.

DWG. No. 018222-D-25
(SHEET 1 OF 1)

PLOT DATE: 21 FEB 03

CAD FILE: M:\WO\018222\P&ID\018222-45.DWG

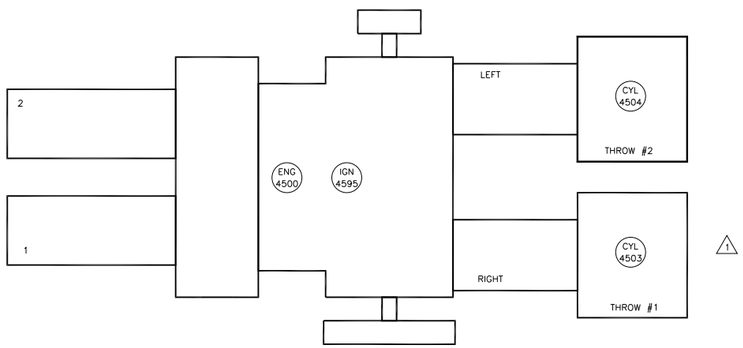

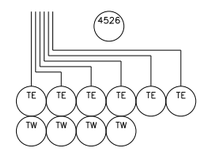

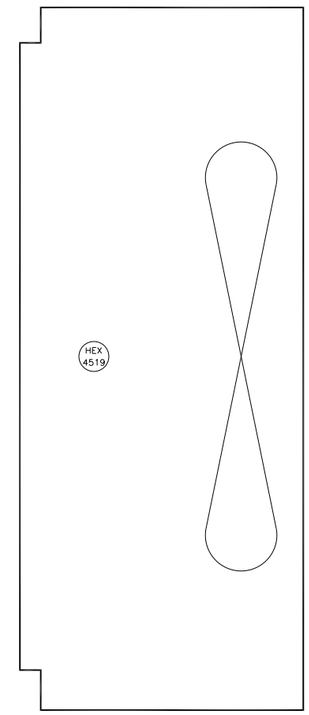

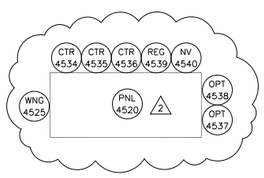

BILL OF MATERIAL

NOTE: ITEM No. = FIRST TWO DIGITS (Work Center), LAST TWO DIGITS (item No.)

INSERT AT END OF THIS LINE

HEIGHT = 0.100
SPACING = 0.177

1

ITEM	PART NO.	TOTAL QUANTITY	DESCRIPTION	REV
4500	813-5955	1.00 EA	INTEGRAL,AJAX,DPC-2202	
			INTEGRAL ENGINE-COMPRESSOR	
			STANDARD BURN	
			296HP @ 440RPM	
			LOW PRESSURE TDI STARTER	
4502	813-9996	1.00 EA	VALVE,CONTROL,FISHER,357,	
			1"NPT,WCC STEEL BODY,3/4"	
			17-4PH(DHT)SST MICROFORM TRIM,	
			TFE PACKING,COMPLIES WITH NACE	
			FAIL OPEN,0-35 PSI	
4503	813-4119	1.00 EA	CYLINDER,AJAX,YK11EA,1050-1	
			C/W POPPET VALVES	
4504	813-5949	1.00 EA	CYLINDER,AJAX,YKCC,11500-1@	
			USE P#814-4178	
4519	813-6126	1.00 EA	COOLER,AJAX-2202/2802,72VCI*	
			AJAX DPC-2202/2802STD SOUR GAS	
			COOLER AMI RE: 9H1118C.	
			MODEL 72VCI AIR COOLED HEAT	
			EXCHANGER IN ACCORDANCE WITH	
			THE ENCLOSED SPEC. SHEETS	
			089-01AM THROUGH 089-03AM	
			DATED JANUARY 31, 2000 C/W	
			-SHOP PRIMER FINISH	
			-CRN AND ASME CODE STAMP ON	
			GAS SECTIONS	
			-MANUAL LOUVERS ON EACH GAS	
			COIL	
			-MANUAL LOUVERS ON WATER COIL	
			-BUG SCREENS	
			-HAIL GUARDS	
			-SOUR GAS TRIM	
			-V-BELT FAN DRIVE UTILIZING	
			ONE 15HP TEFC ELECTRIC MOTOR	
4520	813-6135	1.00 EA	PANEL,AJAX,MURPHY,TTD-JR,*	
			PANEL-FRONT ACCESS(CLASS I,	
			DIV II)"MURPHYMATIC" CONTROL	
			PANEL HOUSED IN A 24"x30"x9"	
			FRONT ACCESS WALL MOUNT	
			ENCLOSURE W/ FRONT LOCKING	
			DOOR AND A 30" REVERSED FREE-	
			STANDING BASE. PANEL WILL	
4525	813-9126	1.00 EA	PANEL,OPTION,WING,MURPHY,	
			AUTO SPEED/BY-PASS,1-4150 &	
			2-2506,C/W AUTO MANUAL CUTOUTS	
4534	814-7628	1.00 EA	CONTROLLER,FISHER,4150K,	
			0-200PSI,BOURDON TUBE,3-15PSI	
			OUTPUT,PANEL MOUNT,DIRECT	
			ACTING,NACE	
4535	814-7622	1.00 EA	CONTROLLER,FISHER,2506,	
			RECEIVER/CONTROLLER,BELLOWS,	
			3-15PSI IN,6-30PSI OUT,NACE	
4536	814-7625	1.00 EA	CONTROLLER,FISHER,2506,	
			RECEIVER/CONTROLLER,BELLOWS,	
			3-15PSI,IN & OUT,NACE	
4537	814-0725	1.00 EA	PANEL OPTION,AUTO MAN,0-60,AJA	
4538	814-7631	1.00 EA	PANEL,ORIFICE,AJAX,	
			AUTO MANUAL,0-30PSI,AJAX	
4539	812-0568	1.00 EA	REGULATOR,FISHER,67CFR-N224,	
			1/4" NPT,0-35PSI,VENT.CAP,SOUR	
4540	813-5571	5.00 EA	^VALVE,NEEDLE,CM2-1-M22T-DN-T*	
			CENTURY,0.25"MXF,6000PSI,NACE	
4595	813-4032	1.00 EA	INTEGRALOP,IGN,2202/2802,	
			STANDARD BURN	
4596	813-4215	2.00 EA	COUNTERWEIGHT,AJAX,K-63473J-1	
			SAE1020STL	
			(6) THERMOCOUPLES (TYPE J)	
			C/W QUICK DISCONNECTS	
			(1) 3-1/2"-3/4" 316SS	
			THERMOWELL	
			(3) 2"-3/4" 316SS THERMOWELL	
			(1) WIRING HARNESS	
			C/W QUICK CONNECTS	

CUSTOMER CONNECTIONS

TAG	DESCRIPTION	SIZE	TAG	DESCRIPTION	SIZE

GENERAL NOTES

FOR NOTES SEE DRAWING 018222-10

STAMP AREA

THIS DOCUMENT IS SUPPLIED IN CONFIDENCE. REPRODUCTION OR DISTRIBUTION IN WHOLE OR PART WITHOUT THE WRITTEN PERMISSION OF UNIVERSAL COMPRESSION INC. IS STRICTLY PROHIBITED.

REV.	BY	CHK'D	REVISION DESCRIPTION	DATE
2	KMB		ADDED AUTO SPEED / BYPASS	21 FEB 03
1	MD	BM	STG.# 1 CYL. CHANGED TO 10.5" (WAS9.5")	12 FEB 02
0	MD	BM	ISSUED FOR FABRICATION	13 NOV 01

UNIVERSAL® COMPRESSION
4949 - 76th Avenue S.E.
P.O. Box 5308, Station 'A'
Calgary, Alberta, Canada T2H 1X6
403/236-5252 Main
800/661-5252 Toll Free
403/236-4261 Fax

TITLE: UTILITIES & INSTRUMENTATION DIAGRAM
AJAX DPC-2202, AMERCOOL 72VCI, 2 THROW, 2 STAGE
MAJOR EQUIPMENT SCHEMATIC

END USER/CONSULTANT: LEASE FLEET

CUST. P.O. No.: -

LOCATION: LOCATION: TBA
LSD: TBA

REVISION: 2

DWG. REFERENCE: 998188-D-45 (REV.0)

DRAWN:	DGD	W.O. No.	018222
DATE:	02 FEB 00	UNIT No.	-
CHK'D:	B.MINSHULL	No. REQ'D:	ONE(1)
PROJ. MGR	B.MINSHULL	SCALE:	N.T.S.

DWG. No. 018222-D-45
(SHEET 1 OF 1)

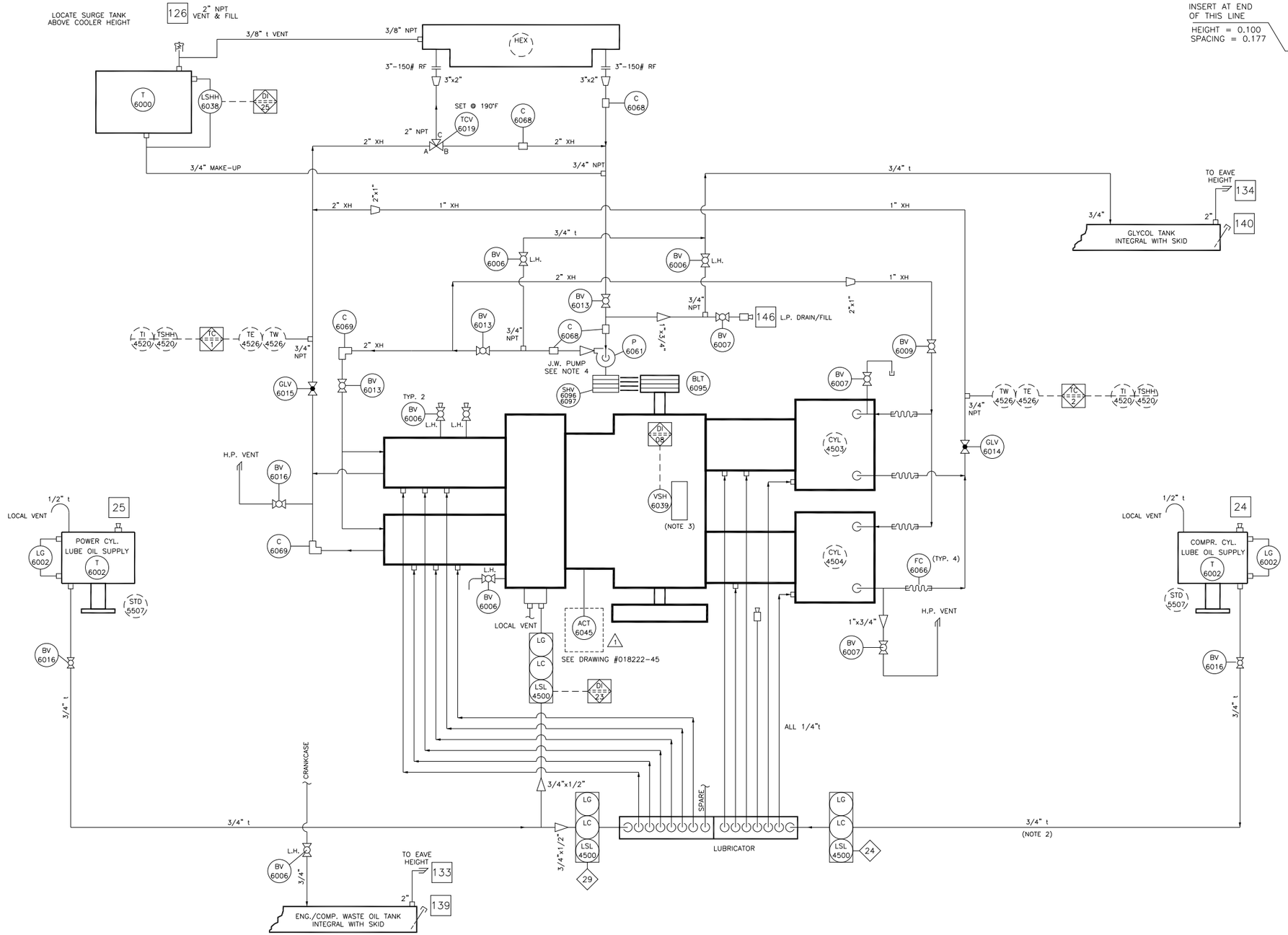

INSERT AT END OF THIS LINE

HEIGHT = 0.100
SPACING = 0.177

BILL OF MATERIAL

NOTE: ITEM No. = FIRST TWO DIGITS (Work Center), LAST TWO DIGITS (Item No.)

ITEM	PART NO.	TOTAL QUANTITY	DESCRIPTION	REV
6000	813-5076	1.00 EA	TANK,SURGE,15 GAL,AJAX,*	
			DPC-2802,2803,2202	
6002	813-5850	2.00 EA	TANK,MIDWEST,55GAL,	
6006	804-5811	6.00 EA	VALVE,BALL,SCR,0.75-2000,APOL*	
			R.PORT,MODEL# 89-104-27	
			LOCKING HANDLE	
6007	803-1045	3.00 EA	VALVE,BALL,SCR,0.75-2000,APOL* 1	
			R.PORT,MODEL# 73-104-01	
6009	800-7445	1.00 EA	VALVE,BALL,SCR,1-2000,APOLLO,*	
			R.PORT,MODEL# 73-105-01	
6013	804-0124	3.00 EA	VALVE,BALL,SCR,2-1500,APOLLO*	
			R.PORT,MODEL# 73-108-01	
6014	806-3281	1.00 EA	^VALVE,GLOBE,SCR,1-800,NEWCO,	
			MODEL# 28T-FS2	
6015	808-0679	1.00 EA	VALVE,GLOBE,SCR,2-800,NEWCO,	
			MODEL# 28T-FS2	
6016	800-7137	3.00 EA	VALVE,BALL,SCR,0.5-2000,APOLL*	
			R.PORT,MODEL# 73-103-01	
6019	813-4995	1.00 EA	VALVE,THERMO,FPE,A2010-190,	
			2"NPT,190 F,CAST IRON BODY	
6038	803-9779	1.00 EA	SWITCH,LEVEL,MURPHY,EL-150K1	
6039	803-9819	1.00 EA	SWITCH,VIBRATION,MURPHY,VS-2	
6045	812-0065	1.00 EA	ACTUATOR,BAUMANN,N32,	
			SPARTAN# B32IN-2	
6061	813-6099	1.00 EA	PUMP,PEERLESS,FI-820AM BF,	
			FOR USE ON AJAX JW SYSTEM	
6066	804-2117	14.00 FT	HOSE,HYDRAULIC,1,Y916*	
6068	603-4998	4.00 EA	COUPLING,DRESSER,2.00,STR*	
6069	801-3543	2.00 EA	COUPLING,DRESSER,2.00,90*	
6095	812-3974	1.00 EA	V-BELT,5V,LENGTH BY SHOP	
6096	813-5004	1.00 EA	SHEAVE,WOODS,2/5V5.5 (SDS-BUSH	
6097	813-5010	1.00 EA	BUSH,WOODS,SDS1-18,1.125"	

CUSTOMER CONNECTIONS

TAG	DESCRIPTION	SIZE	TAG	DESCRIPTION	SIZE
24	COMP. LUBE OIL DAY TANK FILL	3/4" NPTF			
25	ENGINE OIL DAY TANK FILL	3/4" NPTF			
126	JACKET WATER FILL/VENT	2" 7# PR. CAP			
133	WASTE LUBE OIL TANK VENT	2" STACK			
134	GLYCOL TANK VENT	2" STACK			
139	WASTE LUBE OIL TANK PUMP OUT	3" CAMLOK			
140	GLYCOL TANK PUMP OUT	3" CAMLOK			
146	JACKET WATER FILL/DRAIN	3/4" NPTF			

GENERAL NOTES

1. SEE DWG. 018222-D-10 FOR NOTES.
2. ROUTE BEHIND LUBRICATOR ASSEMBLY.
3. MOUNT VIBRATION SWITCH ON 1/2" PLATE SPANNING TWO CRANKCASE COVERS
4. PUMP STAND SHOP TO FIT.
5. ALL FITTINGS ON ENGINE OIL & COOLING TO BE 3000#.

1. UTILITY INSTRUMENT LINES: 316SS TUBING c/w SWAGELOCK CAD PLATED FITTINGS & 316SS FERRULES.
2. INSTRUMENT MEDIUM: CLEAN, DRY GAS.
3. ALL PIPING 2" & UNDER TO BE XH MINIMUM.
4. ALL FITTINGS TO BE 3000# RATING UNLESS OTHERWISE NOTED.
5. AREA CLASSIFICATION: TBA.
6. CONDUIT TYPE: TBA.
7. INSTRUMENT TAGS REQUIRED: ☐YES ☐NO
8. ARRANGE ALL PIPING TO AVOID LIQUID TRAPS.

STAMP AREA

THIS DOCUMENT IS SUPPLIED IN CONFIDENCE. REPRODUCTION OR DISTRIBUTION IN WHOLE OR PART WITHOUT THE WRITTEN PERMISSION OF UNIVERSAL COMPRESSION INC. IS STRICTLY PROHIBITED.

REV.	BY	CHK'D	REVISION DESCRIPTION	DATE
1	KMB		ADDED ACTUATOR FOR SPEED CONTROL	21 FEB 03
0	MD	BM	ISSUED FOR FABRICATION	13 NOV 01

UNIVERSAL® COMPRESSION
4949 - 76th Avenue S.E.
P.O. Box 5308, Station "A"
Calgary, Alberta, Canada T2H 1X6
403/236-5252 Main
800/661-5252 Toll Free
403/236-4261 Fax

TITLE: UTILITIES & INSTRUMENTATION DIAGRAM
AJAX DPC-2202
ENGINE OIL & COOLING SCHEMATIC

END USER/CONSULTANT: LEASE FLEET
CUST. P.O. No.: –
LOCATION: TBA
LSD: TBA
REVISION: 1
DWG. REFERENCE: 998188-D-60 (REV.0)

DRAWN:	DGD	W.O. No.	018222
DATE:	02 FEB 00	UNIT No.	–
CHK'D:	B.MINSHULL	No. REQ'D:	ONE (1)
PROJ. MGR	B.MINSHULL	SCALE:	N.T.S.

DWG. No. 018222-D-60
(SHEET 1 OF 1)

PLOT DATE: 21 FEB 03

CAD FILE: M:\WO\018222\P&ID\018222-60.DWG

PLOT DATE:13 NOV 01

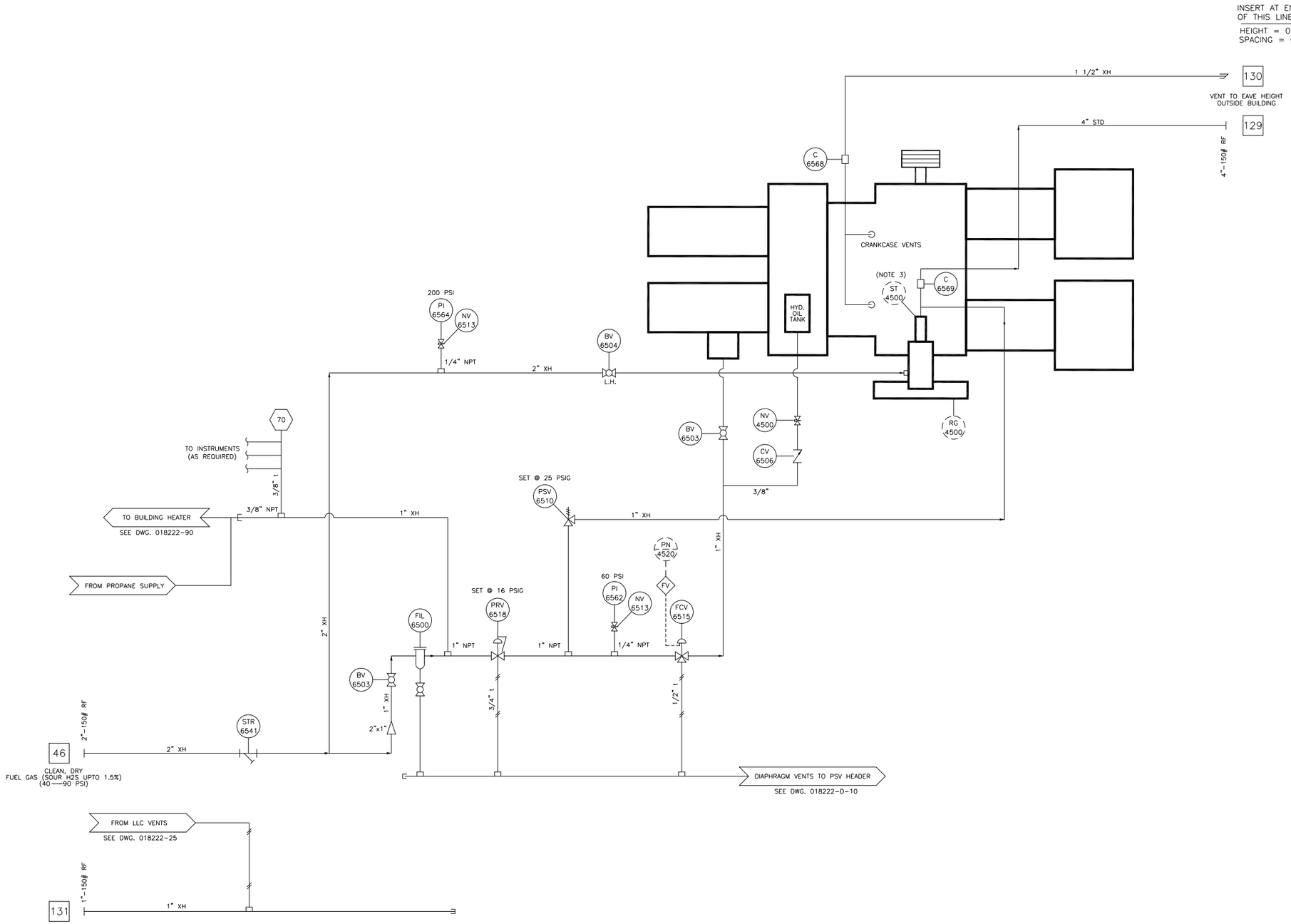

CAD FILE: M:\WO\018222\P&ID\018222-65.DWG

BILL OF MATERIAL

NOTE: ITEM No. = FIRST TWO DIGITS (Work Center), LAST TWO DIGITS (Item No.)

ITEM	PART NO.	TOTAL QUANTITY	DESCRIPTION	REV
6500	803-9681	1.00 EA	FILTER,HEADLINE,1,680AZ1-70C	
			REPLACE.ELEMENT #38-152-70C	
6503	807-6913	2.00 EA	VALVE,BALL,SCR,1-2000,APOLLO,	
			R.PORT,NACE,MODEL# 73-165-01	
6504	804-5803	1.00 EA	VALVE,BALL,SCR,2-1500,APOLLO*	
			R.PORT,MODEL# 89-108-27\HL	
6506	813-5859	1.00 EA	VALVE,CHECK,BALL,.25"NPT,3000#	
			SS,90336 (PREMIER)	
6510	812-4025	1.00 EA	VALVE,RELIEF,FISHER,1805-2,	
			1"NPT,WCB,NACE,5-35 PSIG	
			NITRILE DIA.,CLOSING CAP	
			*TEST REPORTS MUST BE SUPPLIED	
			WITH VALVE UPON SHIPMENT.	
6513	813-5571	2.00 EA	VALVE,NEEDLE,CM2-1-M22T-D-N-T*	
			CENTURY,0.25"MXF,6000PSI,NACE	
6515	803-9665	1.00 EA	VALVE,FUEL,MURPHY,M5081CM1	
			2"NPT,ALUM. BODY,CD IGNITION	
6518	813-4902	1.00 EA	REGULATOR,FISHER,627,NACE,	
			1"NPT,CS,5-20 PSI,1/4" ORIFICE	
6541	800-9762	1.00 EA	STRAINER,Y,2,NPT,CS,	
			MUELLER,#581,CLASS 600	
6562	803-2252	1.00 EA	GAUGE,PRESS,2.5,0-60PSI,WIKA,	
			BTM MOUNT,DUAL SCALE,L.F.	
			MODEL# 233.53	
6564	803-9649	1.00 EA	GAUGE,PRESS,2.5,0-200PSI,WIKA,	
			BTM MOUNT,DUAL SCALE,L.F.	
			MODEL# 233.53	
6568	801-3527	1.00 EA	COUPLING,DRESSER,1.50,STR	
6569	801-3576	1.00 EA	COUPLING,DRESSER,4.00,STR	

CUSTOMER CONNECTIONS

TAG	DESCRIPTION	SIZE	TAG	DESCRIPTION	SIZE
46	FUEL/START GAS SUPPLY	2"-150# RF			
129	START GAS VENT	4"-150# RF			
130	CRANKCASE VENT	1 1/2" MITRE			
131	CONTROL VENT HEADER	1 1/2"-150# RF			

GENERAL NOTES

1. SEE DWG. 018222-D-10 FOR NOTES.
2. FUEL GAS 6000# FITTINGS.
3. LOW PRESSURE STARTER - REQUIRES 2" LINE, 40---90 PSI.
4. VENTS TO BE 3000# FITTINGS.

1. UTILITY INSTRUMENT LINES: 316SS TUBING c/w SWAGELOCK CAD PLATED FITTINGS & 316SS FERRULES.
2. INSTRUMENT MEDIUM: CLEAN, DRY GAS.
3. ALL PIPING 2" & UNDER TO BE XH MINIMUM.
4. ALL FITTINGS TO BE 3000# RATING UNLESS OTHERWISE NOTED.
5. AREA CLASSIFICATION: TBA.
6. CONDUIT TYPE: TBA.
7. INSTRUMENT TAGS REQUIRED: ☐YES ☐NO
8. ARRANGE ALL PIPING TO AVOID LIQUID TRAPS.

STAMP AREA

THIS DOCUMENT IS SUPPLIED IN CONFIDENCE. REPRODUCTION OR DISTRIBUTION IN WHOLE OR PART WITHOUT THE WRITTEN PERMISSION OF UNIVERSAL COMPRESSION INC. IS STRICTLY PROHIBITED.

REV.	BY	CHK'D	REVISION DESCRIPTION	DATE
0	MD		ISSUED FOR FABRICATION	13 NOV 01

UNIVERSAL® COMPRESSION
4949 - 76th Avenue S.E.
P.O. Box 5308, Station 'A'
Calgary, Alberta, Canada T2H 1X6
403/236-5252 Main
800/661-5252 Toll Free
403/236-4261 Fax

TITLE: UTILITIES & INSTRUMENTATION DIAGRAM
AJAX DPC-2202
FUEL & START GAS SCHEMATIC

END USER/CONSULTANT: LEASE FLEET
LOCATION: TBA
LSD: TBA

DRAWN:	DGD	W.O. No.	018222
DATE:	02 FEB 00	UNIT No.	-
CHK'D:	B.MINSHULL	No. REQ'D:	ONE(1)
PROJ. MGR	B.MINSHULL	SCALE:	N.T.S.

CUST. P.O. No.: -
REVISION: 0
DWG. REFERENCE: 998188-D-65 (REV.0)
DWG. No. 018222-D-65
(SHEET 1 OF 1)

PLOT DATE: 13 NOV 01

CAD FILE: M:\WO\018222\P&ID\018222-70.DWG

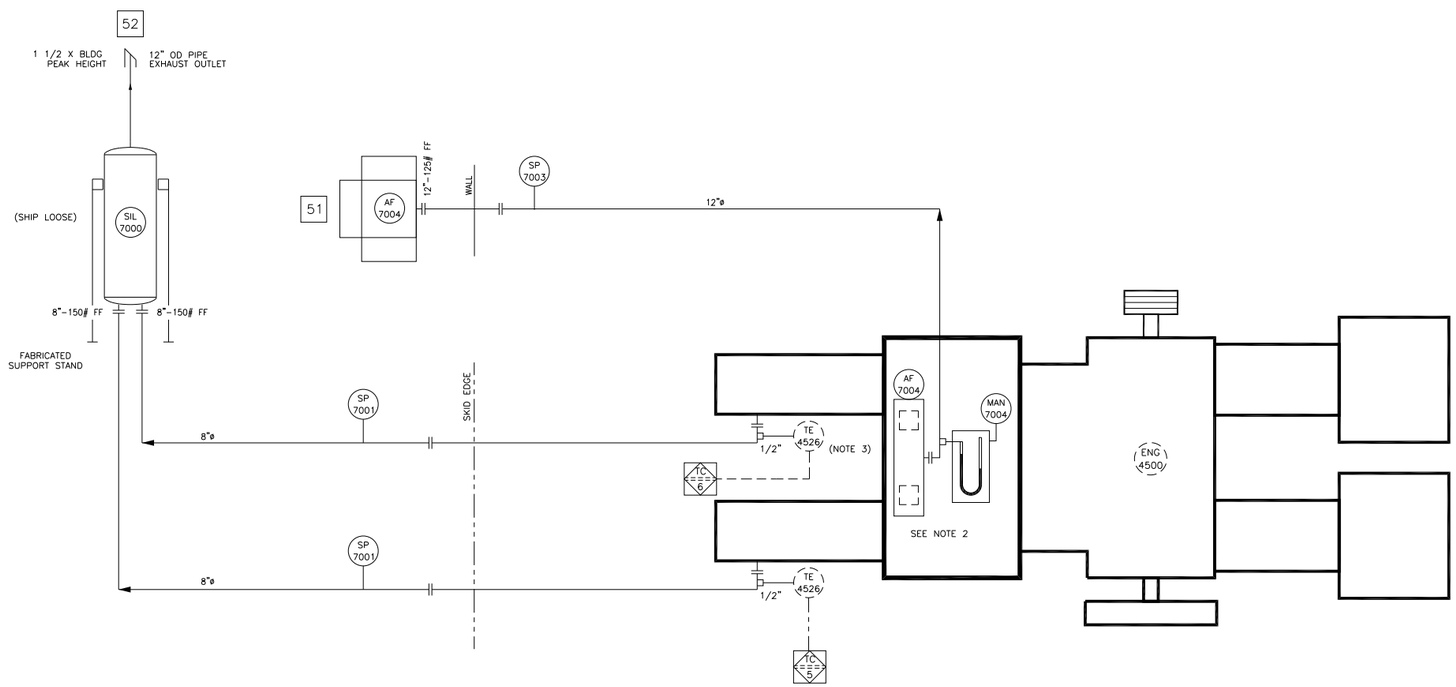

INSERT AT END OF THIS LINE

HEIGHT = 0.100
SPACING = 0.177

BILL OF MATERIAL

NOTE: ITEM No. = FIRST TWO DIGITS (Work Center), LAST TWO DIGITS (item No.)

ITEM	PART NO.	TOTAL QUANTITY	DESCRIPTION	REV
7000	813-6132	1.00 EA	SILENCER,VANEC,TYPE 144,	
			MODEL 144-12F-M(8-8)C1M-10(LE)	
			C/W TRUNNION SUPPORTS FOR USE	
			ON AJAX 2202	
7001	813-6306	2.00 EA	SPOOL,EXHAUST,AJAX 2202	
7003	813-6315	1.00 EA	SPOOL,AIR INTAKE,AJAX 2202	
7004	813-4029	1.00 EA	INTEGRAL-OP,MODIFIED,AIRINTAKE	
			FOR INSTALLATION IN BUILDING	
			C/W FILTER FOR REMOTE MOUNTING	

CUSTOMER CONNECTIONS

TAG	DESCRIPTION	SIZE	TAG	DESCRIPTION	SIZE
51	ENGINE AIR INTAKE	12"ø			
52	ENGINE EXHAUST (TUNED LENGTH)	8"ø			

GENERAL NOTES

1. SEE DWG. 018222-D-10 FOR NOTES.
2. REED VALVE ASSEMBLY TO BE LOCATED ON TOP OF AIR MANIFOLD ASSEMBLY.
3. LOCATE THERMOCOUPLE ON 1/2" T.O.L., 6" BELOW MACHINED FACE OF POWER CYLINDER. (SEE TE4526 ON EXHAUST SPOOL)

1. UTILITY INSTRUMENT LINES: 316SS TUBING c/w SWAGELOCK CAD PLATED FITTINGS & 316SS FERRULES.
2. INSTRUMENT MEDIUM: CLEAN, DRY GAS.
3. ALL PIPING 2" & UNDER TO BE XH MINIMUM.
4. ALL FITTINGS TO BE 3000# RATING UNLESS OTHERWISE NOTED.
5. AREA CLASSIFICATION: TBA.
6. CONDUIT TYPE: TBA.
7. INSTRUMENT TAGS REQUIRED: ☐YES ☐NO
8. ARRANGE ALL PIPING TO AVOID LIQUID TRAPS.

STAMP AREA

THIS DOCUMENT IS SUPPLIED IN CONFIDENCE. REPRODUCTION OR DISTRIBUTION IN WHOLE OR PART WITHOUT THE WRITTEN PERMISSION OF UNIVERSAL COMPRESSION INC. IS STRICTLY PROHIBITED.

REV.	BY	CHK'D	REVISION DESCRIPTION	DATE
0	MD		ISSUED FOR FABRICATION	13 NOV 01

UNIVERSAL® COMPRESSION
4949 - 76th Avenue S.E.
P.O. Box 5308, Station 'A'
Calgary, Alberta, Canada T2H 1X6
403/236-5252 Main
800/661-5252 Toll Free
403/236-4261 Fax

TITLE: UTILITIES & INSTRUMENTATION DIAGRAM
AJAX DPC-2202
INTAKE & EXHAUST SCHEMATIC

END USER/CONSULTANT: LEASE FLEET

CUST. P.O. No.: –

LOCATION: TBA
LSD: TBA

REVISION: 0

DWG. REFERENCE: 998188-D-70 (REV.0)

DRAWN:	DGD	W.O. No.	018222
DATE:	02 FEB 00	UNIT No.	–
CHK'D:	B.MINSHULL	No. REQ'D:	ONE(1)
PROJ. MGR	B.MINSHULL	SCALE:	N.T.S.

DWG. No. 018222-D-70
(SHEET 1 OF 1)

PLOT DATE: 13 NOV 01

CAD FILE: M:\WO\018222\P&ID\018222-80.DWG

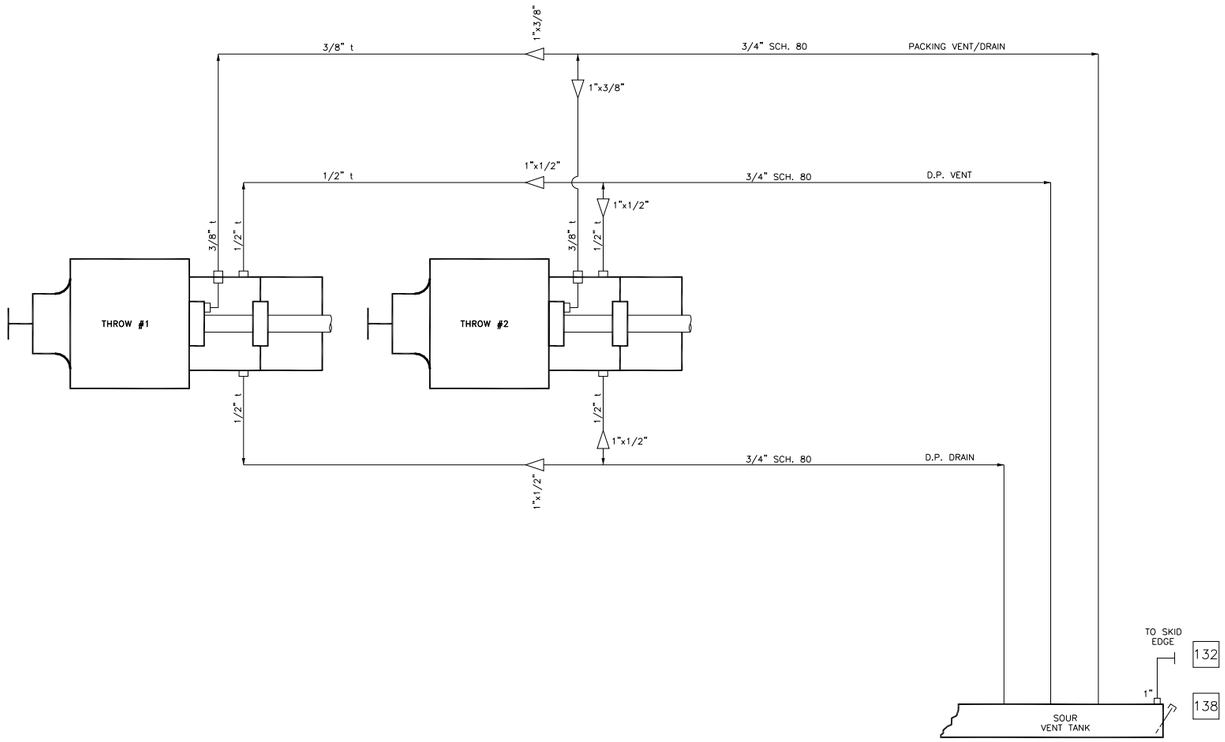

INSERT AT END OF THIS LINE

HEIGHT = 0.100
SPACING = 0.177

BILL OF MATERIAL

NOTE: ITEM No. = FIRST TWO DIGITS (Work Center), LAST TWO DIGITS (item No.)

ITEM	PART NO.	TOTAL QUANTITY	DESCRIPTION	REV
–				

CUSTOMER CONNECTIONS

TAG	DESCRIPTION	SIZE	TAG	DESCRIPTION	SIZE
132	PACKING VENT & DRAIN TANK VENT	1"–150# RF			
138	PACKING VENT & DRAIN TANK PUMP-OUT	3" CAMLOCK			

GENERAL NOTES

1. SEE DWG. 018222-D-10 FOR NOTES.
1. UTILITY INSTRUMENT LINES: 316SS TUBING c/w SWAGELOCK CAD PLATED FITTINGS & 316SS FERRULES.
2. INSTRUMENT MEDIUM: CLEAN, DRY GAS.
3. ALL PIPING 2" & UNDER TO BE XH MINIMUM.
4. ALL FITTINGS TO BE 3000# RATING UNLESS OTHERWISE NOTED.
5. AREA CLASSIFICATION: TBA.
6. CONDUIT TYPE: TBA.
7. INSTRUMENT TAGS REQUIRED: ☐YES ☐NO
8. ARRANGE ALL PIPING TO AVOID LIQUID TRAPS.

STAMP AREA

THIS DOCUMENT IS SUPPLIED IN CONFIDENCE. REPRODUCTION OR DISTRIBUTION IN WHOLE OR PART WITHOUT THE WRITTEN PERMISSION OF UNIVERSAL COMPRESSION INC. IS STRICTLY PROHIBITED.

REV.	BY	CHK'D	REVISION DESCRIPTION	DATE
0	MD		ISSUED FOR FABRICATION	13 NOV 01

UNIVERSAL® COMPRESSION
4949 – 76th Avenue S.E.
P.O. Box 5308, Station 'A'
Calgary, Alberta, Canada T2H 1X6
403/236-5252 Main
800/661-5252 Toll Free
403/236-4261 Fax

TITLE: UTILITIES & INSTRUMENTATION DIAGRAM
AJAX DPC-2202
COMPRESSOR PACKING VENT & DRAIN SCHEMATIC

END USER/CONSULTANT: LEASE FLEET
CUST. P.O. No.: –
LOCATION: TBA
LSD: TBA
REVISION: 0
DWG. REFERENCE: 998188-D-80 (REV.0)

DRAWN:	DGD	W.O. No.	018222
DATE:	02 FEB 00	UNIT No.	–
CHK'D:	B.MINSHULL	No. REQ'D:	ONE(1)
PROJ. MGR	B.MINSHULL	SCALE:	N.T.S.

DWG. No. 018222-D-80
(SHEET 1 OF 1)

PLOT DATE: 13 NOV 01

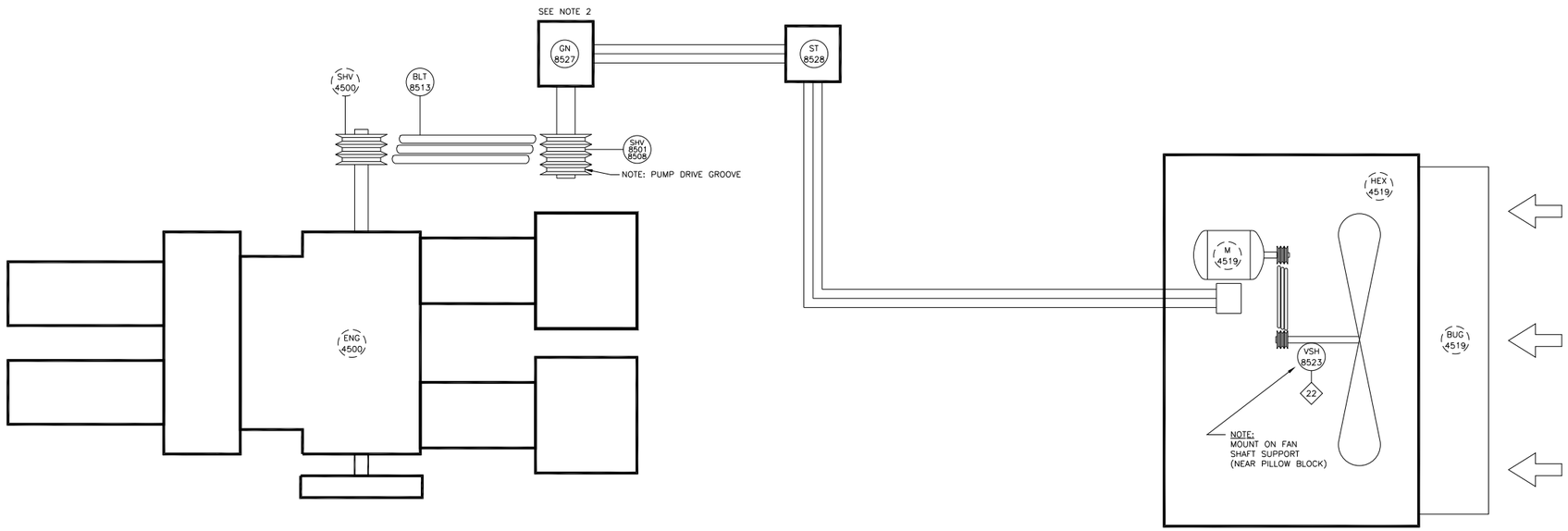

INSERT AT END OF THIS LINE

HEIGHT = 0.100
SPACING = 0.177

BILL OF MATERIAL

NOTE: ITEM No. = FIRST TWO DIGITS (Work Center), LAST TWO DIGITS (item No.)

ITEM	PART NO.	TOTAL QUANTITY	DESCRIPTION	REV
8501	813-5880	1.00 EA	SHEAVE,WOODS,4/5V4.9 (SD BUSH)	
8508	813-5871	1.00 EA	BUSHING,WOODS,SD1-78,1.875"	
8513	813-5865-140	1.00 EA	V-BELT,3R5VX1400,	
8523	803-9819	1.00 EA	SWITCH,VIBRATION,MURPHY,VS-2	
8527	813-6108	1.00 EA	GENERATOR,15kW,MAC,	
			MODEL#280MDL0056	
			KW: 15 PHASE: 3P.F.: 0.8	
			FREQ: 60 RPM: 1800 AMB: 40 C	
			DUTY: CONTINUOUS RISE: 105 C	
			ENCLOSURE: OPEN	
			VOLTAGE: 480 INSUL CLASS: F/H	
			W/ CSA LABEL, 2 BEARING	
8528	813-4890	1.00 EA	ELECT,DISCONNECT,FUSIBLE,	
			60 AMP-15HP/600 VOLT RATED	
			(3) 20AMP TIME DELAY FUSES	
			600 VOLT RATED	
			MODEL #EBM BB SDW 60361	
			CLASS 1,DIV 2	

CAD FILE: M:\WO\018222\P&ID\018222-85.DWG

CUSTOMER CONNECTIONS

TAG	DESCRIPTION	SIZE	TAG	DESCRIPTION	SIZE

GENERAL NOTES

1. SEE DWG.018222-D-10 FOR NOTES.
2. GENERATOR STAND SHOP TO FIT.

1. UTILITY INSTRUMENT LINES: 316SS TUBING c/w SWAGELOCK CAD PLATED FITTINGS & 316SS FERRULES.
2. INSTRUMENT MEDIUM: CLEAN, DRY GAS.
3. ALL PIPING 2" & UNDER TO BE XH MINIMUM.
4. ALL FITTINGS TO BE 3000# RATING UNLESS OTHERWISE NOTED.
5. AREA CLASSIFICATION: TBA.
6. CONDUIT TYPE: TBA.
7. INSTRUMENT TAGS REQUIRED: ☐YES ☐NO
8. ARRANGE ALL PIPING TO AVOID LIQUID TRAPS.

STAMP AREA

THIS DOCUMENT IS SUPPLIED IN CONFIDENCE. REPRODUCTION OR DISTRIBUTION IN WHOLE OR PART WITHOUT THE WRITTEN PERMISSION OF UNIVERSAL COMPRESSION INC. IS STRICTLY PROHIBITED.

REV.	BY	CHK'D	REVISION DESCRIPTION	DATE
0	MD		ISSUED FOR FABRICATION	13 NOV 01

UNIVERSAL® COMPRESSION
4949 - 76th Avenue S.E.
P.O. Box 5308, Station 'A'
Calgary, Alberta, Canada T2H 1X6
403/236-5252 Main
800/661-5252 Toll Free
403/236-4261 Fax

TITLE: UTILITIES & INSTRUMENTATION DIAGRAM
AJAX DPC-2202
COOLER DRIVE SCHEMATIC

END USER/CONSULTANT: LEASE FLEET
CUST. P.O. No.: –
LOCATION: TBA
LSD: TBA
REVISION: 0
DWG. REFERENCE: 998188-D-85 (REV.0)

DRAWN:	DGD	W.O. No.	018222
DATE:	02 FEB 00	UNIT No.	–
CHK'D:	B.MINSHULL	No. REQ'D:	ONE (1)
PROJ. MGR	B.MINSHULL	SCALE:	N.T.S.

DWG. No. 018222-D-85
(SHEET 1 OF 1)

PLOT DATE:13 NOV 01

CAD FILE: M:\WO\018222\P&ID\018222-90.DWG

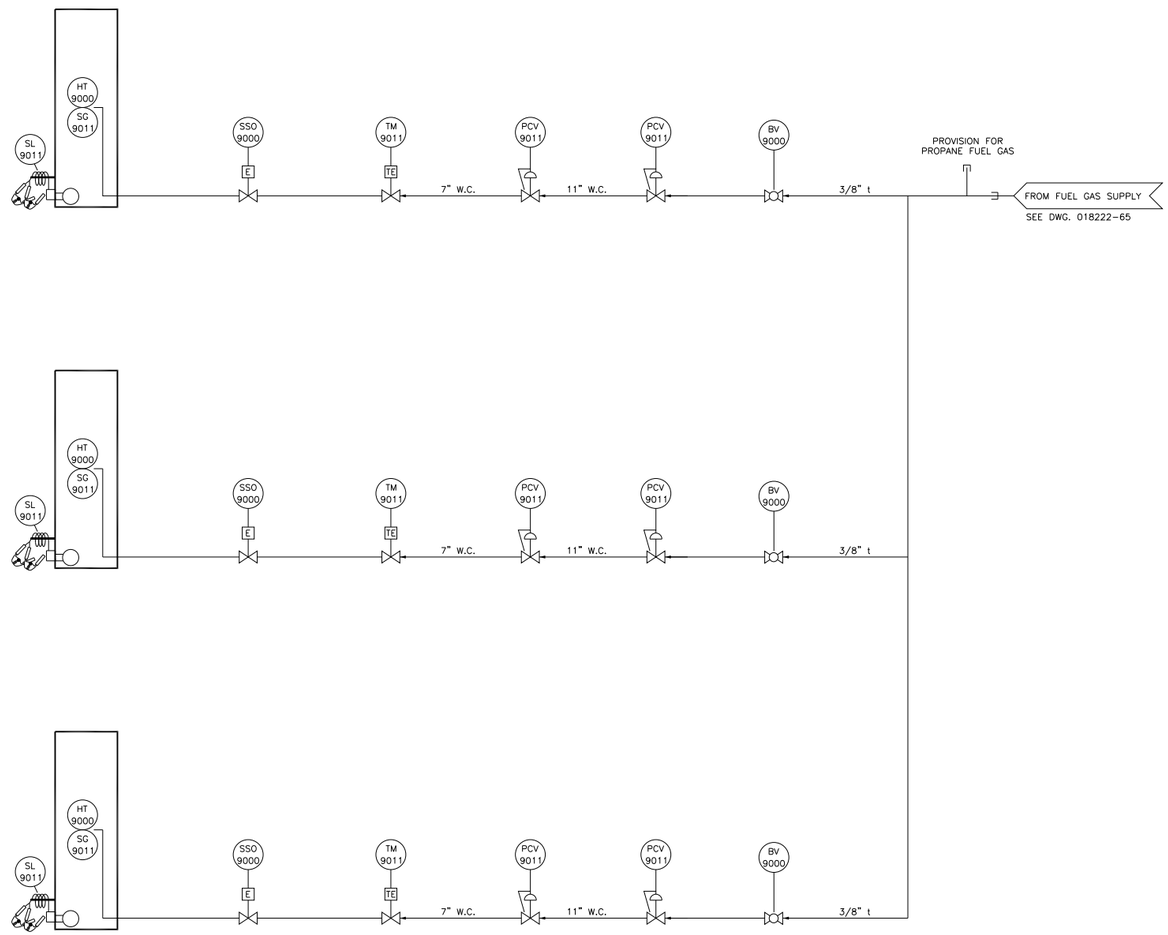

INSERT AT END OF THIS LINE

HEIGHT = 0.100
SPACING = 0.177

BILL OF MATERIAL

NOTE: ITEM No. = FIRST TWO DIGITS (Work Center), LAST TWO DIGITS (item No.)

ITEM	PART NO.	TOTAL QUANTITY	DESCRIPTION	REV
9000	803-9908	3.00 EA	HEATER,CISCAN,BX 24x24,	
			24000 BTU/Hr,6.6KW,12V,	
			C/W MAXI-TROL, BALL VALVE AND	
			SAFETY SHUT-OFF VALVE.	
9011	810-9075	3.00 EA	HEATER,SYSTEM,CONTROLS,12V,	
			(1) 803-9908 CATAYNE 24X24	
			==========	
			(1) EA. 806-3168 SAFETY GRILL	
			(1) EA. 806-3143 STARTUP LEADS	
			(1) EA. 803-9924 THERMOSTAT	
			(1) EA. 803-9932 REGULATOR	

CUSTOMER CONNECTIONS

TAG	DESCRIPTION	SIZE	TAG	DESCRIPTION	SIZE

GENERAL NOTES

1. SEE DWG.018222-D-10 FOR NOTES.
1. UTILITY INSTRUMENT LINES: 316SS TUBING c/w SWAGELOCK CAD PLATED FITTINGS & 316SS FERRULES.
2. INSTRUMENT MEDIUM: CLEAN, DRY GAS.
3. ALL PIPING 2" & UNDER TO BE XH MINIMUM.
4. ALL FITTINGS TO BE 3000# RATING UNLESS OTHERWISE NOTED.
5. AREA CLASSIFICATION: TBA.
6. CONDUIT TYPE: TBA.
7. INSTRUMENT TAGS REQUIRED: ☐YES ☐NO
8. ARRANGE ALL PIPING TO AVOID LIQUID TRAPS.

STAMP AREA

THIS DOCUMENT IS SUPPLIED IN CONFIDENCE. REPRODUCTION OR DISTRIBUTION IN WHOLE OR PART WITHOUT THE WRITTEN PERMISSION OF UNIVERSAL COMPRESSION INC. IS STRICTLY PROHIBITED.

REV.	BY	CHK'D	REVISION DESCRIPTION	DATE
0	MD		ISSUED FOR FABRICATION	13 NOV 01

UNIVERSAL® COMPRESSION
4949 – 76th Avenue S.E.
P.O. Box 5308, Station "A"
Calgary, Alberta, Canada T2H 1X6
403/236-5252 Main
800/661-5252 Toll Free
403/236-4261 Fax

TITLE: UTILITIES & INSTRUMENTATION DIAGRAM
AJAX DPC-2202, AMERCOOL 72VCI, 2 THROW, 2 STAGE
BUILDING HEATER SYSTEM SCHEMATIC

END USER/CONSULTANT: LEASE FLEET
CUST. P.O. No.: TBA
LOCATION: TBA
LSD: TBA
REVISION: 0
DWG. REFERENCE: 998188-D-90 (REV.0)

DRAWN:	DGD	W.O. No.	018222
DATE:	02 FEB 00	UNIT No.	–
CHK'D:	B.MINSHULL	No. REQ'D:	ONE(1)
PROJ. MGR	B.MINSHULL	SCALE:	N.T.S.

DWG. No. 018222-D-90
(SHEET 1 OF 1)

PLOT DATE: 13 NOV 01

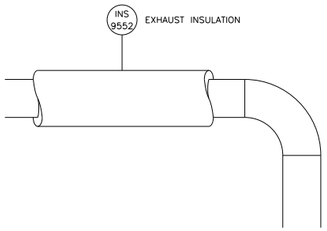

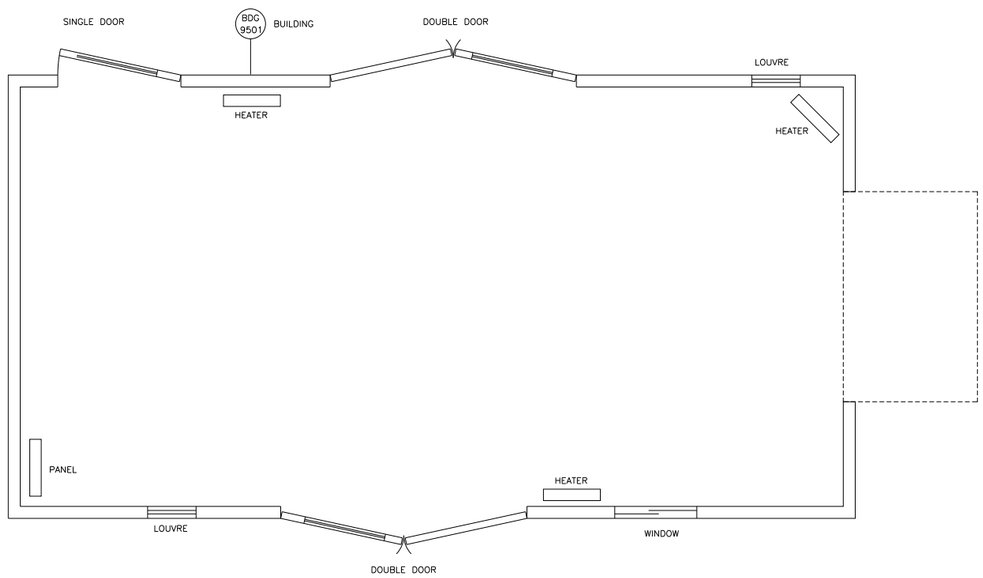

INSERT AT END OF THIS LINE

HEIGHT = 0.100
SPACING = 0.177

PS 9500 PULSATION STUDY

BE

OIL 9553

OIL 9595

TB 9554

BILL OF MATERIAL

NOTE: ITEM No. = FIRST TWO DIGITS (Work Center), LAST TWO DIGITS (item No.)

ITEM	PART NO.	TOTAL QUANTITY	DESCRIPTION	REV
9501	813-6834	1.00 EA	BUILDING,AJAX 2202/2802,	
			W13.5'XL29.5'XH9.0'	
			EXTERIOR:22GA WALL/ROOF SAP BL	
			INTERIOR:24GA WALL/ROOF WHITE	
			INSULATION:R-12 WALL/ROOF	
			DOORS:(2)6X7C/W FRAME,HINGES,	
			WEATHER STRIPPING,THRESHOLD,	
			CHECK CHAIN,SWEEP,LOCKNG PANIC	
			HARDWARE,SINGLE GLAZED FIXED	
			IWG GLAZING(1PER DOUBLE DOOR)	
			WINDOWS:(2)40"X40"DOUBLE GLAZE	
			SLIDE WINDOW C/W 1/2 SCREEN	
			VENTS:(1)CONTINOUS RIDGE	
			(1)3X7 MAN DOOR (2)ICE RAKES	
			29.5'PER SIDE (2)REMOVABLE	

CAD FILE: M:\WO\018222\P&ID\018222-95.DWG

CUSTOMER CONNECTIONS

TAG	DESCRIPTION	SIZE	TAG	DESCRIPTION	SIZE

GENERAL NOTES

1. SEE DWG.018222-D-10 FOR NOTES.
1. UTILITY INSTRUMENT LINES: ELECTROGALVANIZED STEEL TUBING c/w SWAGELOCK CAD PLATED FITTINGS & SS FERRULES.
2. INSTRUMENT MEDIUM: CLEAN, DRY GAS.
3. ALL PIPING 2" & UNDER TO BE XH MINIMUM.
4. ALL FITTINGS TO BE 3000# RATING UNLESS OTHERWISE NOTED.
5. AREA CLASSIFICATION: TBA.
6. CONDUIT TYPE: TBA.
7. INSTRUMENT TAGS REQUIRED: ☐YES ☐NO

STAMP AREA

THIS DOCUMENT IS SUPPLIED IN CONFIDENCE. REPRODUCTION OR DISTRIBUTION IN WHOLE OR PART WITHOUT THE WRITTEN PERMISSION OF UNIVERSAL COMPRESSION INC. IS STRICTLY PROHIBITED.

REV.	BY	CHK'D	REVISION DESCRIPTION	DATE
0	MD		ISSUED FOR FABRICATION	13 NOV 01

UNIVERSAL® COMPRESSION
4949 - 76th Avenue S.E.
P.O. Box 5308, Station 'A'
Calgary, Alberta, Canada T2H 1X6
403/236-5252 Main
800/661-5252 Toll Free
403/236-4261 Fax

TITLE: UTILITIES & INSTRUMENTATION DIAGRAM
AJAX DPC-2202, AMERCOOL 72VCI, 2 THROW, 2 STAGE
MISCELLANEOUS EQUIPMENT AND ACCESSORIES SCHEMATIC

END USER/CONSULTANT: LEASE FLEET

CUST. P.O. No.: –

LOCATION: TBA
LSD: TBA

REVISION: 0

DWG. REFERENCE: 998188-D-95 (REV.0)

DRAWN:	DGD	W.O. No.	018222
DATE:	02 FEB 00	UNIT No.	–
CHK'D:	B.MINSHULL	No. REQ'D:	ONE(1)
PROJ. MGR	B.MINSHULL	SCALE:	N.T.S.

DWG. No. 018222-D-95
(SHEET 1 OF 1)

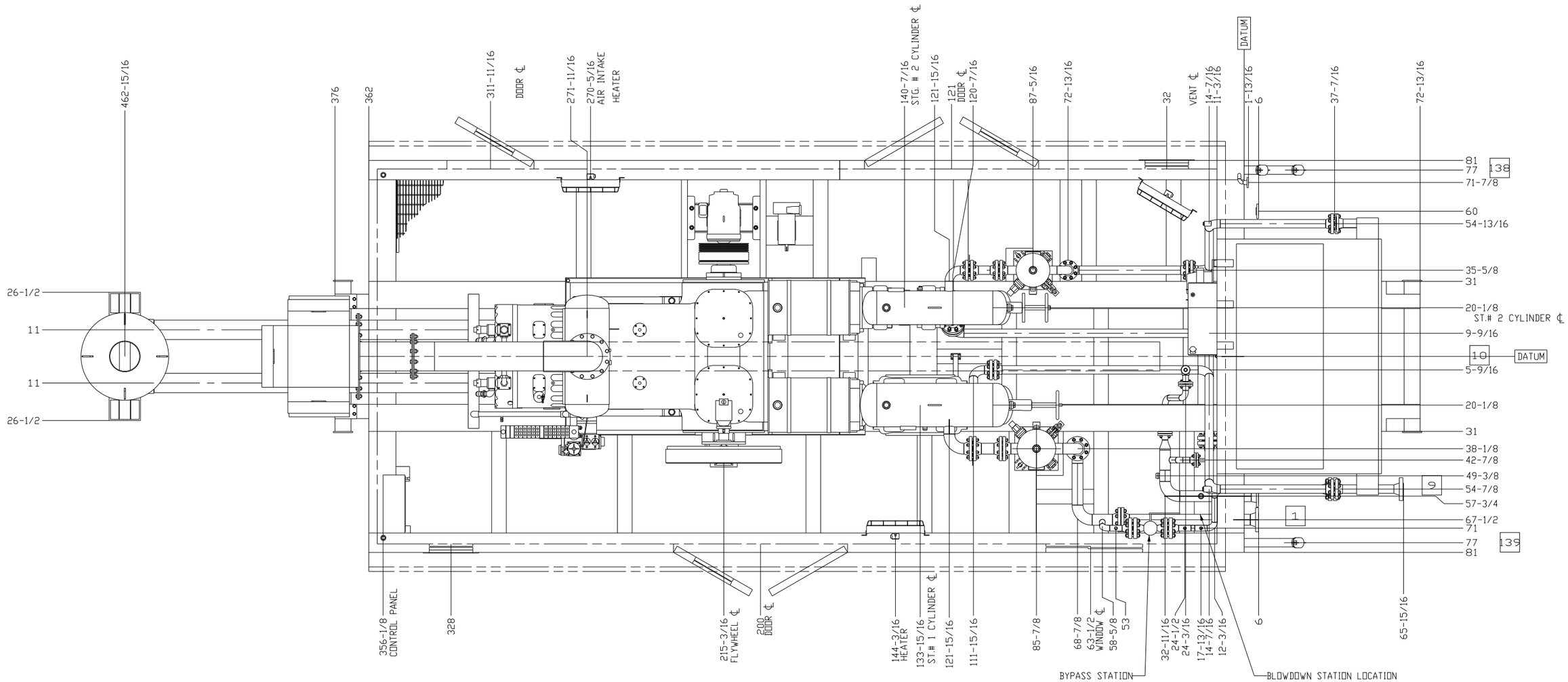

GENERAL NOTES

1. IT IS UC'S RECOMMENDATION THAT ANY PRE-SPOOLING TO THIS COMPRESSOR PACKAGE CONTAIN FIELD WELDS AT ALL CUSTOMER CONNECTIONS.
2. ALL PIPING MUST BE SELF SUPPORTING BEYOND THIS COMPRESSOR PACKAGE.
3. ALL DIMENSIONS ARE IN INCHES (UNLESS OTHERWISE SPECIFIED).
4. DIMENSIONS IN "BOLD PRINT" DENOTE REFERENCE DIMENSIONS.
5. DO NOT SCALE THIS DRAWING FOR CONSTRUCTION PURPOSES.
6. PRIMER:.....N/R
   PAINT: PACKAGE - (1) COAT UC STANDARD HIGH-SOLIDS EPOXY - COLOUR TO MATCH UNIT
   GRATING - (2) COATS MACHINE ENAMEL - BLACK
7. DENOTES RECOMMENDED LOCATION OF SUPPORTS REQUIRED TO AID THE OUTBOARD CYLINDER SUPPORTS.
8. DENOTES CENTER OF GRAVITY. (TBA)

CUSTOMER CONNECTIONS

TAG	DESCIPTION	SIZE
1	STAGE ONE INLET	4-300# RF
9	FINAL DISCHARGE	3-900# RF
10	SCRUBBER DRAIN HEADER	1 NPTF
23	PSV HEADER	3-150# RF
46	FUEL/ START GAS SUPPLY	2-150# RF
51	ENGINE AIR INTAKE	12 ø
52	ENGINE EXHAUST	8 ø
126	JACKET WATER FILL/VENT	2 -7 #PR.CAP
129	START GAS VENT	4-150# RF
130	CRANCASE VENT	1-1/2 CPLG
131	CONTROL VENT HEADER	1-1/2-150# RF
132	PACKING VENT & DRAIN TANK VENT	2-150# RF
136	ENGINE OIL DAY TANK VENT	2 STACK
137	ENGINE OIL DAY TANK VENT	2 STACK
138	PACKING VENT & DRAIN TANK PUMP-OUT	3 CAMLOCK
139	JACKET WATER FILL/DRAIN	3 CAMLOCK

CUSTOMER CONNECTIONS

TAG	DESCRIPTION	SIZE
–	–	–

ESTIMATED WEIGHTS

DESCRIPTION	SHIPPING ARRANGEMENT	WEIGHT (lb)
COMPRESSOR	MOUNTED	29000
DRIVER	MOUNTED	–
COOLER	S. LOOSE	12800
SKID	MOUNTED/S. LOOSE	30000
VESSEL	MOUNTED	5900
EXHAUST SYSTEM	MOUNTED/S. LOOSE	TBA
MISC.	MOUNTED/S. LOOSE	16300
CRANE	S. LOOSE	–
BUILDING	FIELD ERECTED	12000
TOTAL APPROX. SHIPPING WEIGHT		106600
TOTAL APPROX. WEIGHT OF ALL EQUIPMENT		110300

OVERALL DIMENSIONS

DESCRIPTION	LENGTH FT-IN [mm]	WIDTH FT-IN [mm]	HEIGHT FT-IN [mm]
SHIPPING	39'-4"	14'-0"	13'-6"
OVERALL	46'-2"	14'-0"	20'-2"

STAMP AREA

THIS DOCUMENT IS SUPPLIED IN CONFIDENCE. REPRODUCTION OR DISTRIBUTION IN WHOLE OR IN PART WITHOUT THE WRITTEN PERMISSION OF UNIVERSAL COMPRESSION IS STRICTLY PROHIBITED.

REV.	BY	CHK'D	ECR No. or REVISION DESCRIPTION	DATE
0	MD		ISSUED FOR FABRICATION	16 NOV 01

UNIVERSAL COMPRESSION
4949 - 76th Avenue S.E.
P.O. Box 5308, Station 'A'
Calgary, Alberta, Canada T2H 1X6
403/236-5252 Main
800/661-5252 Toll Free
403/236-4261 Fax

TITLE: GENERAL ARRANGEMENT
AJAX DPC 2802/2202, AMERCOOL 72VCI
NATURAL GAS COMPRESSION PACKAGE

END USER/CONSULTANT: LEASE FLEET
CUST. P.O. No.: TBA
LOCATION: TBA
Isd: TBA
REVISION: 0
DWG REFERENCE: –

DRAWN:	DGD	W.O. No.	018222
DATE:	30-MAY-00	UNIT No.	unit_no
CHK'D:	B.MINSHULL	No.REQ'D	ONE PER W.O.
PR.J.L.DR.	B.MINSHULL	SCALE:	3:64

DWG. No. 018222-2A
(SHEET 1 OF 4)

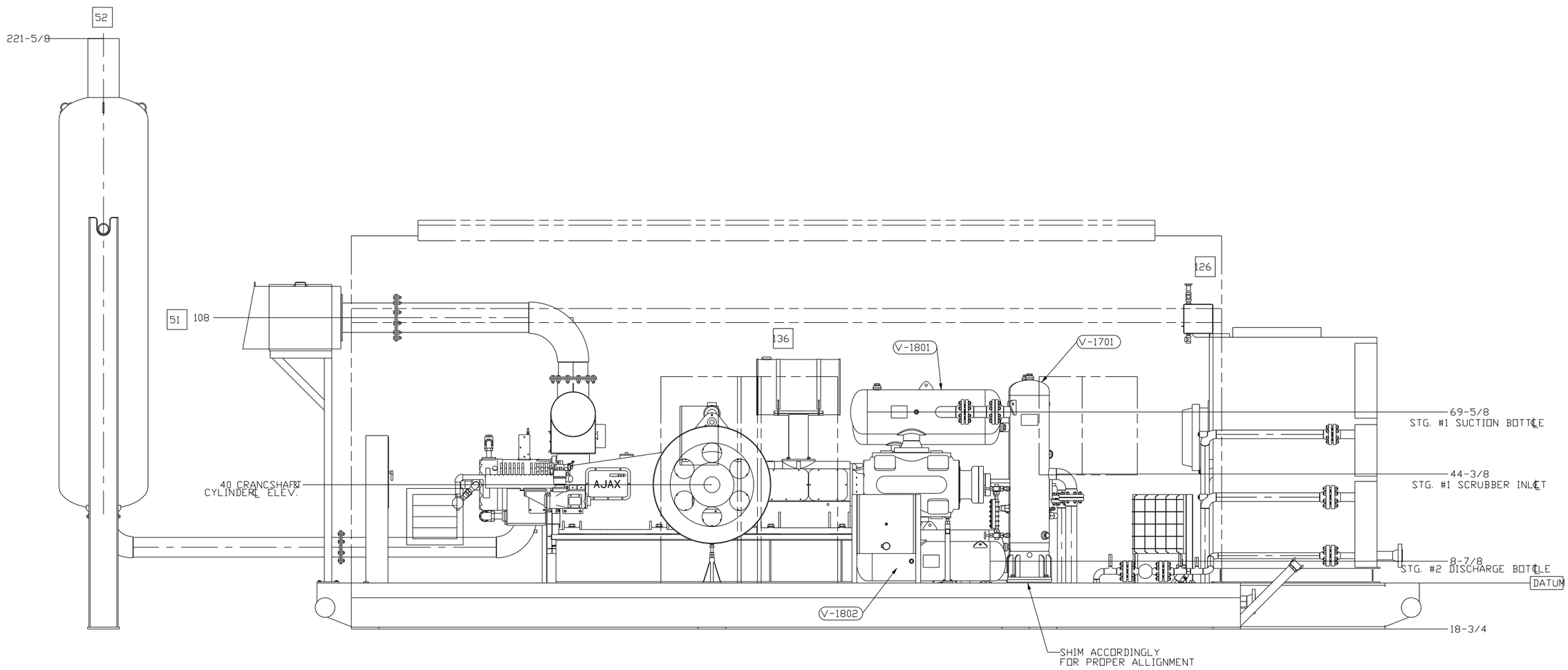

GENERAL NOTES

1. IT IS UC'S RECOMMENDATION THAT ANY PRE-SPOOLING TO THIS COMPRESSOR PACKAGE STOP AT FIELD WELDS AT ALL CUSTOMER CONNECTIONS.
2. ALL PIPING MUST BE SELF SUPPORTING BEYOND THIS COMPRESSOR PACKAGE.
3. ALL DIMENSIONS ARE IN INCHES (UNLESS OTHERWISE SPECIFIED).
4. DIMENSIONS IN 'BOLD PRINT' DENOTE REFERENCE DIMENSIONS.
5. DO NOT SCALE THIS DRAWING FOR CONSTRUCTION PURPOSES.
6. PRIMER:.....N/R
   PAINT: PACKAGE - (1) COAT UC STANDARD HIGH-SOLIDS EPOXY - COLOUR TO MATCH UNIT
   GRATING - (2) COATS MACHINE ENAMEL - BLACK
7. DENOTES RECOMMENDED LOCATION OF SUPPORTS REQUIRED TO AID CYLINDER BOARD SUPPORTS.
8. DENOTES CENTER OF GRAVITY. (TBA)

CUSTOMER CONNECTIONS

TAG	DESCRIPTION	SIZE
1	STAGE ONE INLET	4-300# RF
9	FINAL DISCHARGE	3-900# RF
10	SCRUBBER DRAIN HEADER	1 NPTF
23	PSV HEADER	3-150# RF
46	FUEL/ START GAS SUPPLY	2-150# RF
51	ENGINE AIR INTAKE	12 ø
52	ENGINE EXHAUST	8 ø
126	JACKET WATER FILL/VENT	2 -7 #PR.CAP
129	START GAS VENT	4-150# RF
130	CRANCASE VENT	1-1/2 CPLG
131	CONTROL VENT HEADER	1-1/2-150# RF
132	PACKING VENT DRAIN TANK VENT	2-150# RF
136	ENGINE OIL DAY TANK VENT	2 STACK
137	ENGINE OIL DAY TANK VENT	2 STACK
138	PACKING VENT DRAIN TANK PUMP-OUT	3 CAMLOCK
139	JACKET WATER FILL/DRAIN	3 CAMLOCK

CUSTOMER CONNECTIONS

TAG	DESCRIPTION	SIZE
-	-	-

ESTIMATED WEIGHTS

DESCRIPTION	SHIPPING ARRANGEMENT	WEIGHT (lb)
COMPRESSOR	MOUNTED	29000
DRIVER	MOUNTED	-
COOLER	S. LOOSE	12800
SKID	MOUNTED/S. LOOSE	30000
VESSEL	MOUNTED	5900
EXHAUST SYSTEM	MOUNTED/S. LOOSE	TBA
MISC.	MOUNTED/S. LOOSE	16300
CRANE	S. LOOSE	-
BUILDING	FIELD ERECTED	12000
TOTAL APPROX. SHIPPING WEIGHT		106600
TOTAL APPROX. WEIGHT OF ALL EQUIPMENT		110300

OVERALL DIMENSIONS

DESCRIPTION	LENGTH FT-IN [mm]	WIDTH FT-IN [mm]	HEIGHT FT-IN [mm]
SHIPPING	39'-4"	14'-0"	13'-6"
OVERALL	46'-2"	14'-0"	20'-2"

STAMP AREA

THIS DOCUMENT IS SUPPLIED IN CONFIDENCE. REPRODUCTION OR DISTRIBUTION IN WHOLE OR IN PART WITHOUT THE WRITTEN PERMISSION OF UNIVERSAL COMPRESSION IS STRICTLY PROHIBITED.

REV.	BY	CHK'D	ECR No. or REVISION DESCRIPTION	DATE
0	MD		ISSUED FOR FABRICATION	16 NOV 01

UNIVERSAL COMPRESSION
4949 - 76th Avenue S.E. 403/236-5252 Main
P.O. Box 5308, Station 'A' 800/661-5252 Toll Free
Calgary, Alberta, Canada T2H 1X6403/236-4261 Fax

TITLE: GENERAL ARRANGEMENT-ELEVATION
AJAX DPC 2802/2202, AMERCOOL 72 VCI
NATURAL GAS COMPRESSION PACKAGE

END USER/CONSULTANT: LEASE FLEET
CUST. P.O. No. TBA
LOCATION: TBA (sd) TBA
REVISION 0
DWG REFERENCE: –

DRAWN:	MD	W.O. No.	018222
DATE:	14-Nov-01	UNIT No.	unit_no
CHK'D:	B.MINSHULL	No.REQ'D	ONE PER W.O.
PRJ.LDR.:	B.MINSHULL	SCALE:	3:64

DWG No. 018222-D-2B
(SHEET 2 OF 6)

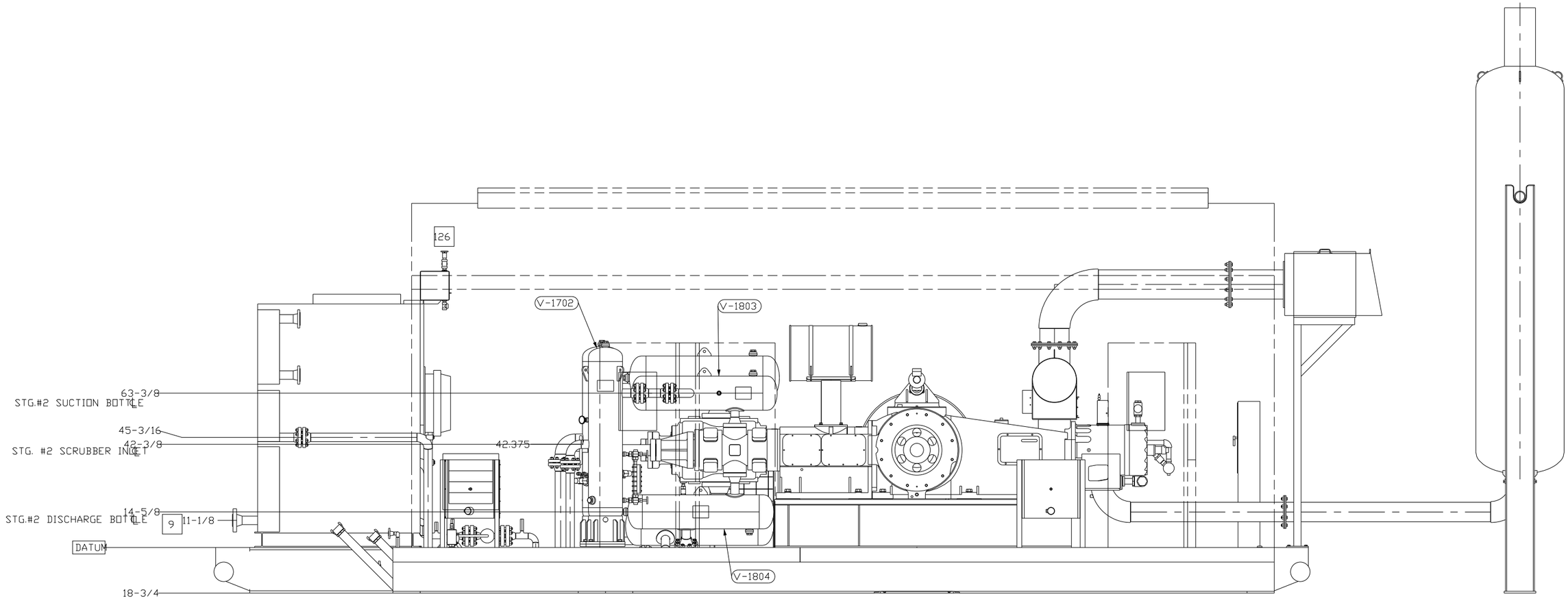

GENERAL NOTES

1. IT IS UC'S RECOMMENDATION THAT ANY PRE-SPOOLING TO THIS COMPRESSOR PACKAGE STOP AT FIELD WELDS AT ALL CUSTOMER CONNECTIONS.
2. ALL PIPING MUST BE SELF SUPPORTING BEYOND THIS COMPRESSOR PACKAGE.
3. ALL DIMENSIONS ARE IN INCHES (UNLESS OTHERWISE SPECIFIED).
4. DIMENSIONS IN "BOLD PRINT" DENOTE REFERENCE DIMENSIONS.
5. DO NOT SCALE THIS DRAWING FOR CONSTRUCTION PURPOSES.
6. PRIMER:.....N/R
   PAINT: PACKAGE - (1) COAT UC STANDARD HIGH-SOLIDS EPOXY - COLOUR TO MATCH
   GRATING - (2) COATS MACHINE ENAMEL - BLACK
7. DENOTES RECOMMENDED LOCATION OF SUPPORTS REQUIRED TO AID CUSTOMER IN FINAL SUPPORTS.
8. DENOTES CENTER OF GRAVITY. (TBA)

CUSTOMER CONNECTIONS

TAG	DESCIPTION	SIZE
1	STAGE ONE INLET	4-300# RF
9	FINAL DISCHARGE	3-900# RF
10	SCRUBBER DRAIN HEADER	1 NPTF
23	PSV HEADER	3-150# RF
46	FUEL/ START GAS SUPPLY	2-150# RF
51	ENGINE AIR INTAKE	12 ø
52	ENGINE EXHAUST	8 ø
126	JACKET WATER FILL/VENT	2 -7 #PR.CAP
129	START GAS VENT	4-150# RF
130	CRANCASE VENT	1-1/2 CPLG
131	CONTROL VENT HEADER	1-1/2-150# RF
132	PACKING VENT DRAIN TANK VENT	2-150# RF
136	ENGINE OIL DAY TANK VENT	2 STACK
137	ENGINE OIL DAY TANK VENT	2 STACK
138	PACKING VENT DRAIN TANK PUMP-OUT	3 CAMLOCK
139	JACKET WATER FILL/DRAIN	3 CAMLOCK

CUSTOMER CONNECTIONS

TAG	DESCRIPTION	SIZE
-	-	-

ESTIMATED WEIGHTS

DESCRIPTION	SHIPPING ARRANGEMENT	WEIGHT (lb)
COMPRESSOR	MOUNTED	29000
DRIVER	MOUNTED	-
COOLER	S. LOOSE	12800
SKID	MOUNTED/S. LOOSE	30000
VESSEL	MOUNTED	5900
EXHAUST SYSTEM	MOUNTED/S. LOOSE	TBA
MISC.	MOUNTED/S. LOOSE	16300
CRANE	S. LOOSE	-
BUILDING	FIELD ERECTED	12000
TOTAL APPROX. SHIPPING WEIGHT		106600
TOTAL APPROX. WEIGHT OF ALL EQUIPMENT		110300

OVERALL DIMENSIONS

DESCRIPTION	LENGTH FT-IN [mm]	WIDTH FT-IN [mm]	HEIGHT FT-IN [mm]
SHIPPING	39'-4"	14'-0"	13'-6"
OVERALL	46'-2"	14'-0"	20'-2"

STAMP AREA

THIS DOCUMENT IS SUPPLIED IN CONFIDENCE. REPRODUCTION OR DISTRIBUTION IN WHOLE OR IN PART WITHOUT THE WRITTEN PERMISSION OF UNIVERSAL COMPRESSION IS PROHIBITED.

REV.	BY	CHK'D	ECR No. or REVISION DESCRIPTION	DATE
0	MD		ISSUED FOR FABRICATION	16 NOV 01

UNIVERSAL COMPRESSION
4949 - 76th Avenue S.E. Calgary, Alberta, Canada T2H 1X6
403/236-5252 Main
800/661-5258 Toll Free
403/236-4261 Fax

TITLE: GENERAL ARRANGEMENT-ELEVATION
AJAX DPC 2802/2202, AMERCOOL 72 VCI
NATURAL GAS COMPRESSION PACKAGE

END USER/CONSULTANT: LEASE FLEET
CUST. P.O. No. TBA
LOCATION: TBA (sol: TBA)
REVISION: rev
DWG. REFERENCE: -

DRAWN:	MD	W.O. No.	018222
DATE:	14-Nov-01	UNIT No.	unit_no
CHK'D:	B.MINSHULL	No.REQ'D:	ONE PER W.O.
PRJ.L.DR.	B.MINSHULL	SCALE:	3:64

DWG. No. 018222-D-2C
(SHEET 3 OF 4)

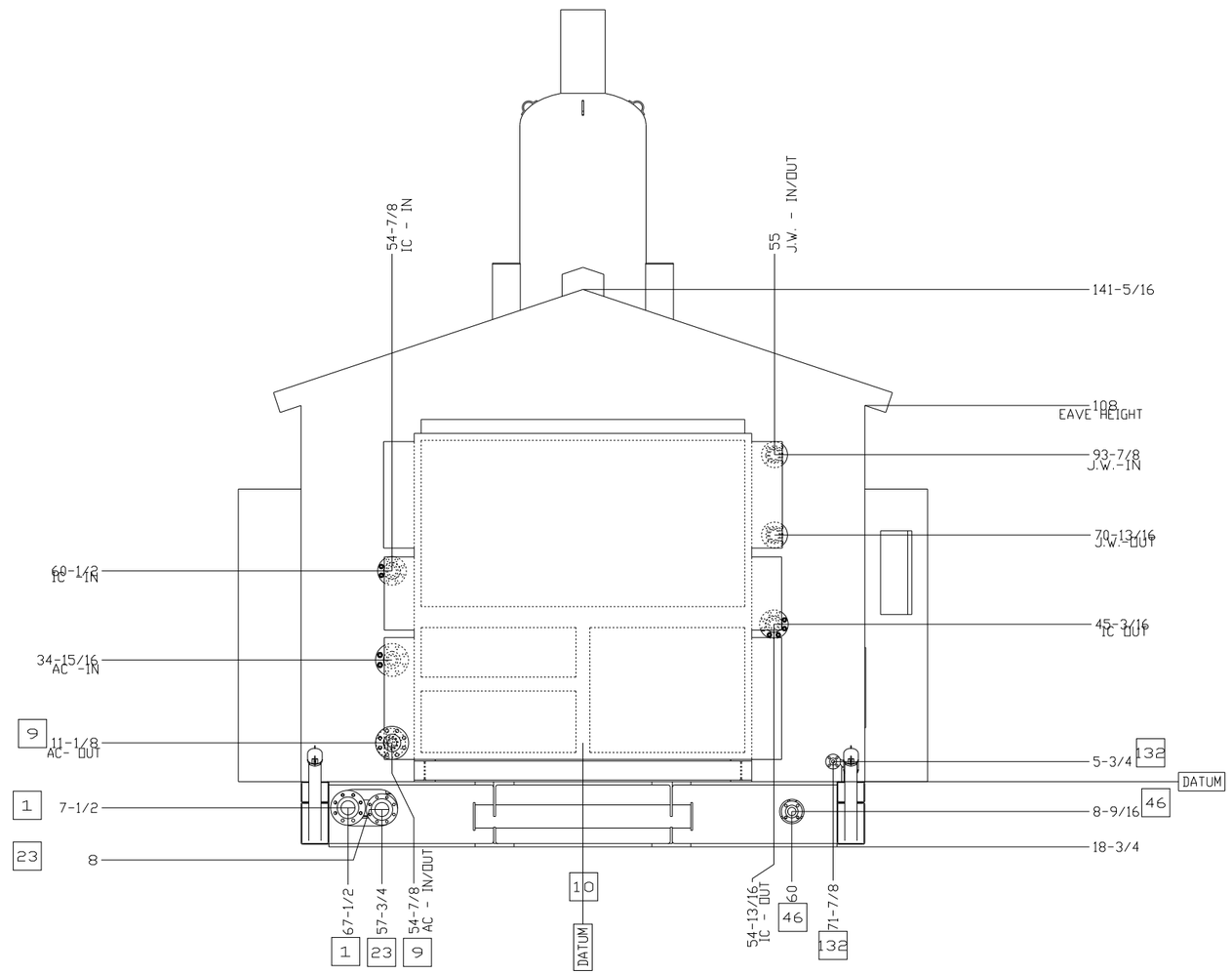

GENERAL NOTES

1. IT IS UC'S RECOMMENDATION THAT ANY PRE-SPOOLING TO THIS COMPRESSOR PACKAGE CONTAIN FIELD WELDS AT ALL CUSTOMER CONNECTIONS.
2. ALL PIPING MUST BE SELF SUPPORTING BEYOND THIS COMPRESSOR PACKAGE.
3. ALL DIMENSIONS ARE IN INCHES (UNLESS OTHERWISE SPECIFIED).
4. DIMENSIONS IN "BOLD PRINT" DENOTE REFERENCE DIMENSIONS.
5. DO NOT SCALE THIS DRAWING FOR CONSTRUCTION PURPOSES.
6. PRIMER:.....N/R
   PAINT: PACKAGE - (1) COAT UC STANDARD HIGH-SOLIDS EPOXY - COLOUR TO MATCH UNIT
   GRATING - (2) COATS MACHINE ENAMEL - BLACK
7. DENOTES RECOMMENDED LOCATION OF SUPPORTS REQUIRED TO AID THE OUTBOARD CYLINDER SUPPORTS.
8. DENOTES CENTER OF GRAVITY. (TBA)

CUSTOMER CONNECTIONS

TAG	DESCRIPTION	SIZE
1	STAGE ONE INLET	4-300# RF
9	FINAL DISCHARGE	3-900# RF
10	SCRUBBER DRAIN HEADER	1 NPTF
23	PSV HEADER	3-150# RF
46	FUEL/ START GAS SUPPLY	2-150# RF
51	ENGINE AIR INTAKE	12 ø
52	ENGINE EXHAUST	8 ø
126	JACKET WATER FILL/VENT	2 -7 #PR.CAP
129	START GAS VENT	4-150# RF
130	CRANCASE VENT	1-1/2 CPLG
131	CONTROL VENT HEADER	1-1/2-150# RF
132	PACKING VENT & DRAIN TANK VENT	2-150# RF
136	ENGINE OIL DAY TANK VENT	2 STACK
137	ENGINE OIL DAY TANK VENT	2 STACK
138	PACKING VENT & DRAIN TANK PUMP-OUT	3 CAMLOCK
139	JACKET WATER FILL/DRAIN	3 CAMLOCK

CUSTOMER CONNECTIONS

TAG	DESCRIPTION	SIZE
-	-	-

ESTIMATED WEIGHTS

DESCRIPTION	SHIPPING ARRANGEMENT	WEIGHT (lb)
COMPRESSOR	MOUNTED	29000
DRIVER	MOUNTED	-
COOLER	S. LOOSE	12800
SKID	MOUNTED/S. LOOSE	30000
VESSEL	MOUNTED	5900
EXHAUST SYSTEM	MOUNTED/S. LOOSE	TBA
MISC.	MOUNTED/S. LOOSE	16300
CRANE	S. LOOSE	-
BUILDING	FIELD ERECTED	12000
TOTAL APPROX. SHIPPING WEIGHT		106600
TOTAL APPROX. WEIGHT OF ALL EQUIPMENT		110300

OVERALL DIMENSIONS

DESCRIPTION	LENGTH FT-IN [mm]	WIDTH FT-IN [mm]	HEIGHT FT-IN [mm]
SHIPPING	39'-4"	14'-0"	13'-6"
OVERALL	46'-2"	14'-0"	20'-2"

STAMP AREA

THIS DOCUMENT IS SUPPLIED IN CONFIDENCE. REPRODUCTION OR DISTRIBUTION IN WHOLE OR IN PART WITHOUT THE WRITTEN PERMISSION OF UNIVERSAL COMPRESSION IS STRICTLY PROHIBITED.

REV.	BY	CHK'D	ECR No. or REVISION DESCRIPTION	DATE
0	MD		ISSUED FOR FABRICATION	14 NOV 01

UNIVERSAL COMPRESSION
4949 - 76th Avenue S.E.
P.O. Box 5308, Station 'A'
Calgary, Alberta, Canada T2H 1X6
403/236-5252 Main
800/661-5252 Toll Free
403/236-4261 Fax

TITLE: GENERAL ARRANGEMENT-END VIEW
AJAX DPC 2802/2202, AMERICOL 72VCI
NATURAL GAS COMPRESSION PACKAGE

END USER/CONSULTANT: LEASE FLEET			CUST. P.O. No. TBA
LOCATION: TBA (Sol-TBA)			REVISION: 0
			DWG REFERENCE: -
DRAWN: MD	W.O. No. 018222		DWG No.
DATE: 14-Nov-01	UNIT No. unit_no		018222-D-2D
CHK'D: B.MINSHULL	No.REQ'D ONE PER W.O.		(SHEET 4 OF 4)
PRJ.L.DR. B.MINSHULL	SCALE: 3:64		

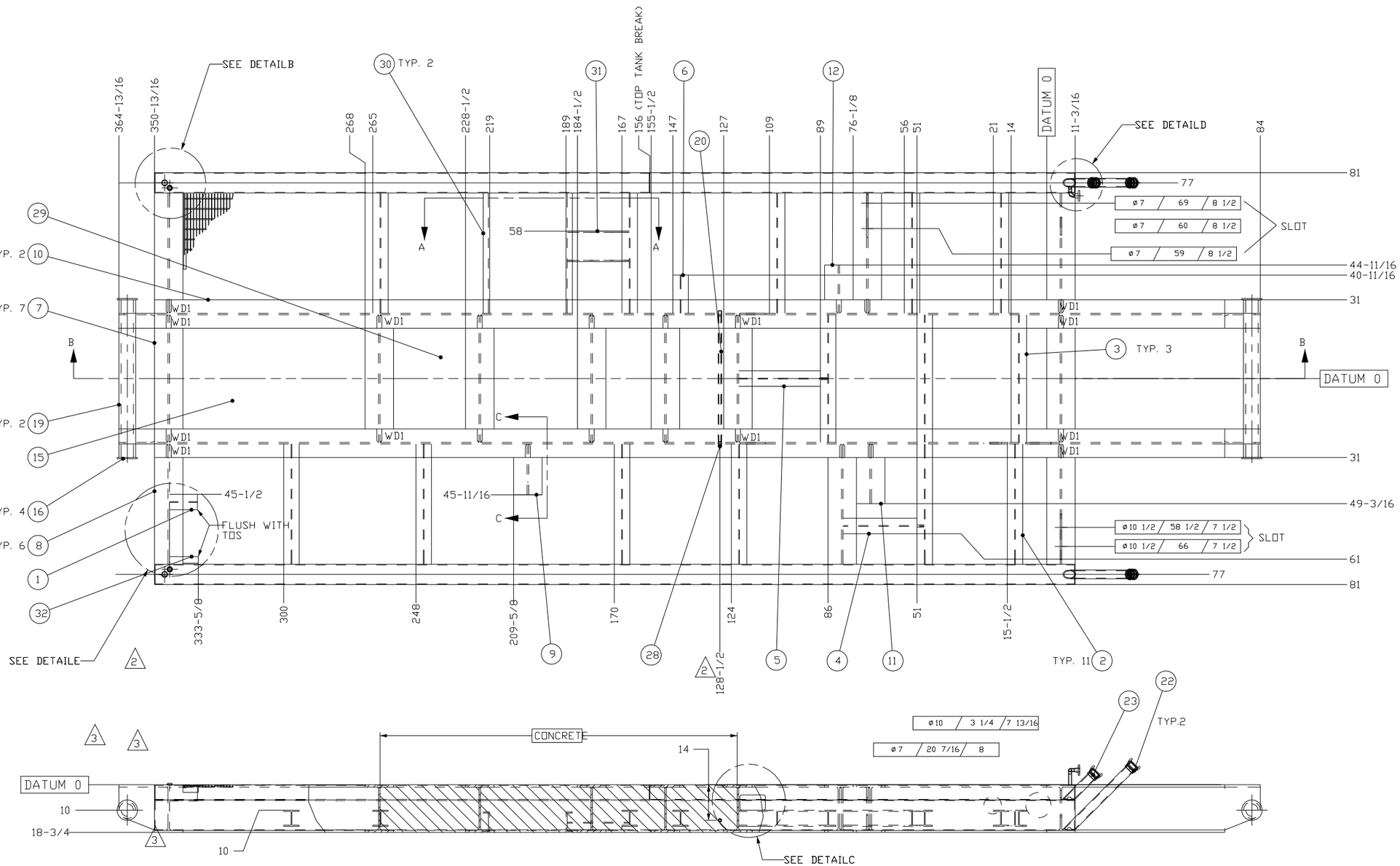

SECTION B-B

BILL OF MATERIAL

NOTE: ITEM No. = FIRST TWO DIGITS (WORK CENTER), LAST TWO DIGITS (ITEM No.)

ITEM	PART No.	QTY	STOCK REQ	DESCRIPTION	REV
5001	801-2182	1	11.000	WIDE FLANGE,6@25	-
5002	801-2182	11	47.305	WIDE FLANGE,6@25	-
5003	801-2182	3	50.210	WIDE FLANGE,6@25	-
5004	801-2182	1	31.985	WIDE FLANGE,6@25	-
5005	801-2182	1	34.985	WIDE FLANGE,6@25	-
5006	801-2182	1	15.000	WIDE FLANGE,6@25	-
5007	812-9826	7	50.210	WIDE FLANGE,18@106	-
5008	812-9826	6	47.305	WIDE FLANGE,18@106	-
5009	812-9826	1	20.000	WIDE FLANGE,18@106	-
5010	812-9826	2	448.800	WIDE FLANGE,18@106	-
5011	812-9826	1	23.500	WIDE FLANGE,18@106	-
5012	812-9826	1	19.000	WIDE FLANGE,18@106	-
5013	803-1345	2	362.000	TUBE, HSS, 8x6x0.25	-
5014	801-3202	2	362.000	TUBE, HSS, 12x8x0.25	-
5015	801-0319	1	71.60x39.60	PLATE,10,GA,MS	-
5016	600-7962	4	8.00x8.00	PLATE,1/2,MILD STEEL	-
5017	801-0295	4	11.50x7.50	PLATE, CHECKER, 1/4	-
5018	801-0295	5	5.50x7.50	PLATE, CHECKER, 1/4	-
5019	800-0916	2	62.000	PIPE,SA106-B,SMLS,6,XXH	-
5020	601-1679	1	51.140	PIPE,SA106-B,SMLS,2,XH	-
5021	601-6044	1	4.375	PIPE,SA106-B,SMLS,1,XH	-
5022	802-9979	2	EA	NOZZLE, 3x36, PORTABLE, SKID	-
5023	809-2607	1	EA	NOZZLE, 3, GEMINI SKID, WASTE	-
5024	801-0254	1	186 FT2	GRATING,DB,1.00X0.187,PAINTED BLACK	-
5025	801-9505	2	EA	FLANGE, TANK, 1.00	-
5026	600-8497	1	EA	FLANGE, RFWN,1-150,XH,SA105N	-
5027	802-0979	2	EA	ELBOW,1,XH,LR,90,SA234-WPB	-
5028	601-3152	2	EA	COUPLING,0.75-3000,SCR,SA105N	-
5029	803-9576	1	2.27 m3	CONCRETE, MIX, 20B2361, m3	-
5030	813-5838	2	47.305	CHANNEL,8@18.75	-
5031	801-2717	1	24.393	CHANNEL,12@25	-
5032	604-1232	1	6.000	ANGLE,3x3x0.375,SA-36	-
5033	801-1859	1	150 FT	ANGLE,1.25x1.25x0.25,SA-36	-

GENERAL NOTES

1. CUSTOMER TO ENSURE THAT SITE FOUNDATION OR CONCRETE BASE PROVIDES ADEQUATE SUPPORT FOR ALL MAIN SKID MEMBERS, CYLINDERS AND VESSEL BASES.
2. FOUNDATION AND PILE DESIGN BY CUSTOMER.
3. WELDING SHALL BE FLUX CORE WPS 107, 3/16" FILLET WELD MIN. U.N.O.
4. ALL PROJECTED CORNERS SHALL BE ROUNDED.
5. ALL MEMBERS SHALL BE FLUSH ON TOP UNLES INDICATED OTHERWISE.
6. DRIP LIP SHALL BE INSTALLED AROUND COMPRESSOR AREA.
7. WELD DETAIL 1 IS ONLY TO BE USED WHERE INDICATED ON DRAWING.
8. SANDBLAST PRIOR TO PRIMING.
9. PRIME (1) COAT ZINC CHROMATE (SHOP PRIMER).
10. SHOP TO ENSURE GRATING IS SUPPORTED AT MAXIMUM OF EVERY FOUR FEET.
11. SKID TO BE LEVEL BEFORE ASSEMBLY.
12. TANK VENTS TO GO THROUGH CRANE LEGS, SEE CRANE DRAWING.
13. GAUGE PLATE TO BE USED UNDER SKID AS SEAL PAN, SLOPED AS SHOWN.
14. INSPECTION "HOLD POINTS":
    1) AFTER FIT-UP, PRIOR TO WELDING.
    2) AFTER WELDING AND CLEANING, PRIOR TO CONCRETE PLACEMENT.
    3) FINAL, PRIOR TO SETTING OF MAJOR EQUIPMENT OR ENTERING INTO STOCK.
15. ESTIMATED WEIGHT: 32890 LBS

REV.	BY	CHK'D	ECR No. or REVISION DESCRIPTION	DATE
2	DGD		ADDED CROSS OVER PIPE AND TANK VENTS	25 APR 00
1	RR	GK	ADD SLEEPERS, MODIFY PANEL SUPPORT	23 FEB 00
0	RR	GK	ISSUED FOR FABRICATION	23 NOV 99

W.O. DESIGNATION TABLE

W.O.#	REV.	SERIAL #	QTY
998188	0	-	1
998189	0	-	1
998239	1,2	-	1
998250	1,2	-	1
998258	1,2	-	1
008122	1,2	-	1
018128	1,2	-	1
018222	1,2	-	1
018343	1,2	-	1
028066	1,2,3	-	1

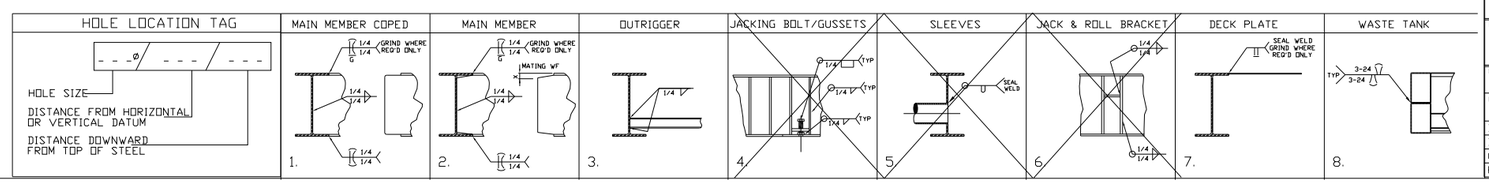

UNIVERSAL COMPRESSION
4949 - 76th Avenue S.E.
P.O. Box 5308, Station 'A'
Calgary, Alberta, Canada T2H 1X6
403/236-5252 Main
800/661-5252 Toll Free
403/236-4261 Fax

TITLE: SKID,13.5x30,AJAX 2802/2202

END USER/CONSULTANT: LEASE FLEET

CUST. P.O No.: -

LOCATION: TBA TBA

REVISION: 2

DWG. REFERENCE: -

DRAWN:	R.ROVETO	W.O. No.	SEE TABLE
DATE:	25-APR-00	UNIT No.	-
CHK'D:	RKJ	No.REQ'D:	SEE TABLE
PRJ.LDR.	R. JAROSZ	SCALE:	3:64

DWG NO. 813-5829

(SHEET1 OF 2)

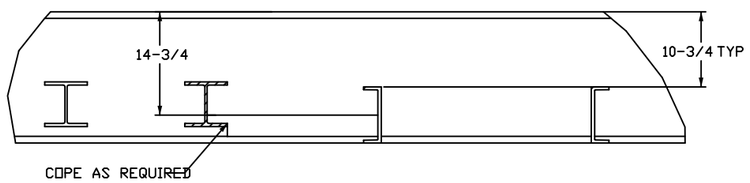

SECTION A-A

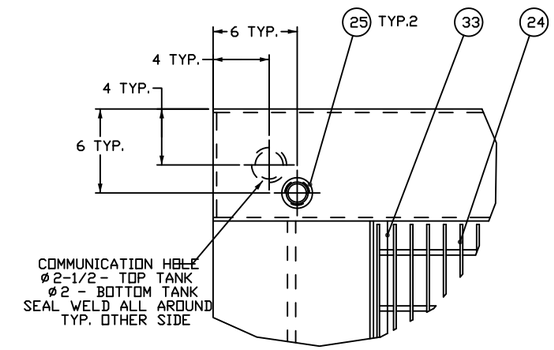

DETAIL B
SCALE 3:16

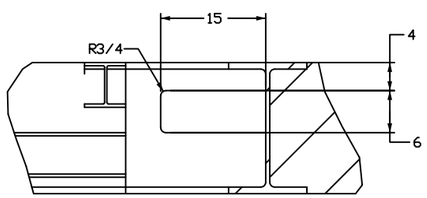

SECTION C-C

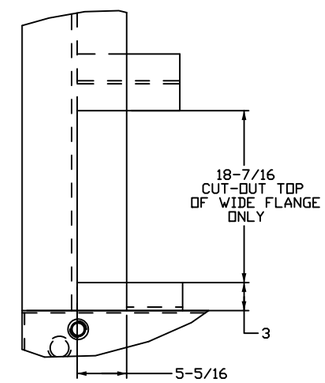

DETAIL E
SCALE 1:8

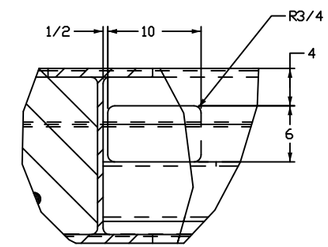

CUT-OUT TYP. ON
BOTH MAIN RUNNERS

DETAIL C
SCALE 1:8

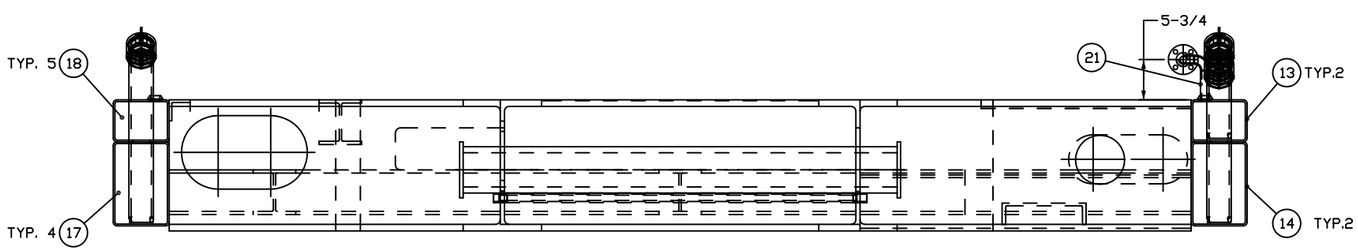

END VIEW (PUMP-OUT SIDE)

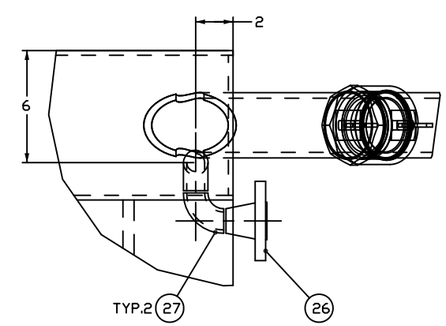

DETAIL D
SCALE 1:4

GENERAL NOTES

1. ALL DIMENSIONS ARE IN INCHES (UNLESS OTHERWISE SPECIFIED).
2. CUSTOMER TO ENSURE THAT SITE FOUNDATION OR CONCRETE BASE PROVIDES ADEQUATE SUPPORT FOR ALL MAIN SKID MEMBERS, CYLINDERS AND VESSEL BASES.
3. FOUNDATION AND PILE DESIGN BY CUSTOMER.
4. WELDING SHALL BE FLUX CORE WPS 107, 3/16" FILLET WELD MIN. U.N.O.
5. ALL PROJECTED CORNERS SHALL BE ROUNDED.
6. ALL MEMBERS SHALL BE FLUSH ON TOP UNLESS OTHERWISE SPECIFIED.
7. WELD DETAIL 1 IS ONLY TO BE USED WHERE INDICATED ON DRAWING.
8. SANDBLAST PRIOR TO PAINTING.
9. PRIME....N/R
   PAINT....(1) COAT AMERLOCK 400 HIGH EPOXY (TO MATCH UNIT)
10. SHOP TO ENSURE GRATING IS SUPPORTED AT MAXIMUM OF EVERY FOUR FEET.
11. SKID TO BE LEVEL BEFORE ASSEMBLY.
12. GAUGE PLATE TO BE USED UNDER SKID AS SEAL PAN, SLOPED AS SHOWN.
13. INSPECTION "HOLD POINTS":
    1) AFTER FIT-UP, PRIOR TO WELDING.
    2) AFTER WELDING AND CLEANING, PRIOR TO CONCRETE PLACEMENT.
    3) FINAL, PRIOR TO SETTING OF MAJOR EQUIPMENT OR ENTERING INTO STOCK.

THIS DOCUMENT IS SUPPLIED IN CONFIDENCE. REPRODUCTION OR DISTRIBUTION IN WHOLE WITHOUT THE WRITTEN PERMISSION OF UNIVERSAL COMPRESSION IS PROHIBITED.

SEE SHEET 1 OF 2

REV.	BY	CHK'D	ECR No. or REVISION DESCRIPTION	DATE

UNIVERSAL COMPRESSION
4949 - 76th Avenue S.E.
P.O. Box 5308, Station "A"
Calgary, Alberta, Canada T2H 1X6
403/236-5252 Main
800/661-5252 Toll Free
403/236-4261 Fax

TITLE: SKID,13.5x30,AJAX 2802/2202
-
-

END USER/CONSULTANT: LEASE FLEET				CUST. P.O No. -
LOCATION: TBA TBA				REVISION: 3
				AVG. REFERENCE -
DRAWN:	R.ROVETO	W.O. No.	SEE TABLE	DWG. NO.
DATE:	25-APR-00	UNIT No.	-	813-5829
CHK'D:	RKJ	No.REQ'D:	SEE TABLE	(SHEET 2 OF 2)
PRJ.LDR.	R. JAROSZ	SCALE:	3:32	

HOLE LOCATION TAG

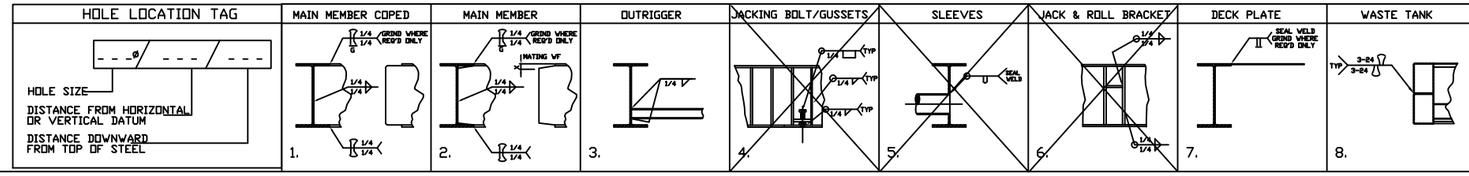

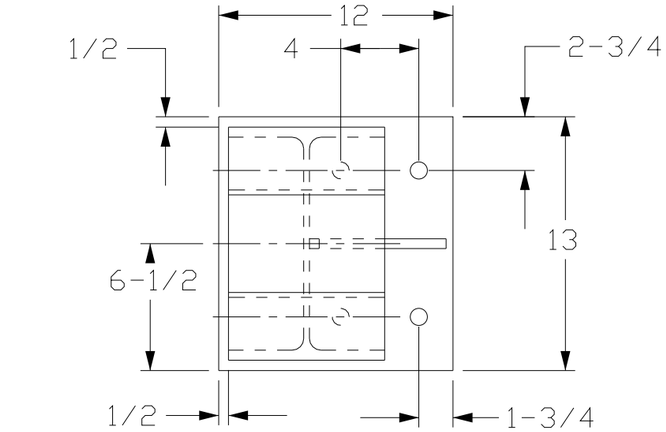

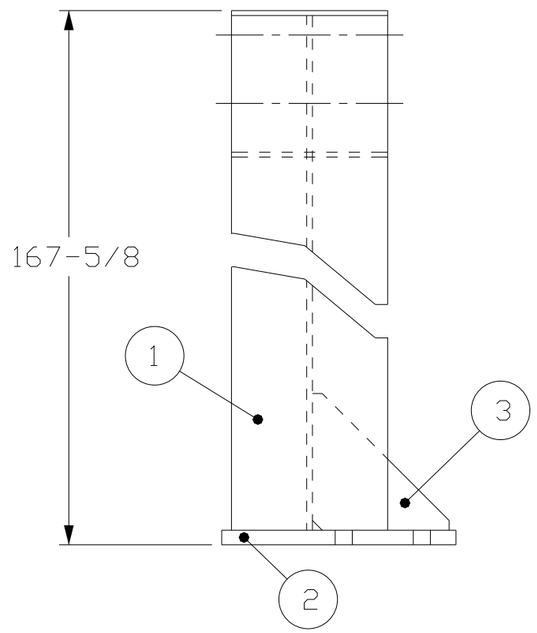

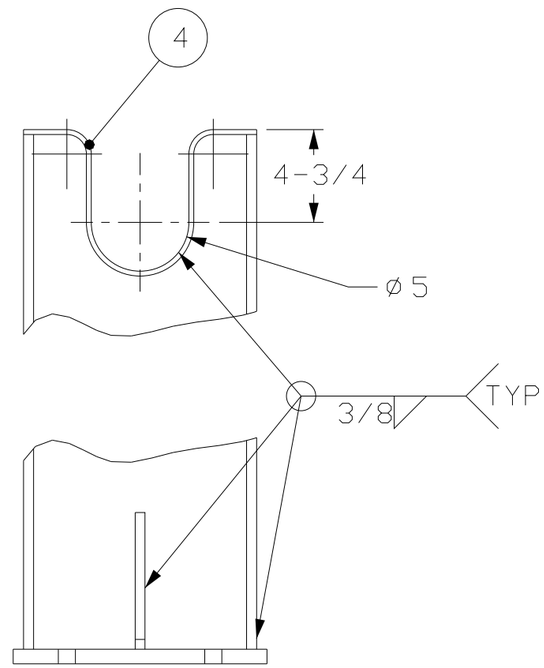

THIS DOCUMENT IS SUPPLIED IN CONFIDENCE. REPRODUCTION OR DISTRIBUTION IN WHOLE OR IN PART WITHOUT THE WRITTEN PERMISSION OF UNIVERSAL COMPRESSION LTD. IS PROHIBITED.

REV.	BY	CHK'D	ECR No. or REVISION DESCRIPTION	DATE
0	DGD		ISSUED FOR CONSTRUCTION	30 MAR 00

W.O. DESIGNATION TABLE

W.O.#	REV.	SERIAL #	QTY
9989239	0	–	2
9989250	0	–	2
9989258	0	–	2
018222	0	–	2
018343	0	–	2
028066	0	–	2

BILL OF MATERIAL

NOTE: ITEM No. = FIRST TWO DIGITS (WORK CENTER), LAST TWO DIGITS (ITEM No.)

ITEM	PART No.	QTY	STOCK REQ	DESCRIPTION	REV
5501	801-2303	1	166.605	WIDE FLANGE,12@40	
5502	601-1402	1	12.00 × 13.00	PLATE,3/4,MILD STEEL	
5503	600-7962	1	7.00 × 7.00	PLATE,1/2,MILD STEEL	
5504	801-0368	1	8.00 × 23.23	PLATE,1/4,MILD STEEL	

UNIVERSAL COMPRESSION
4949 - 76th Avenue S.E.
P.O. Box 5308, Station 'A'
Calgary, Alberta, Canada T2H 1X6
403/236-5252 Main
800/661-5252 Toll Free
403/236-4261 Fax

TITLE:
SUPPORT,SILENCER
AJAX DPC 2202,AMERCOOL 72VCI
NATURAL GAS COMPRESSION PACKAGE

END USER/CONSULTANT: LEASE FLEET

CUST. P.O. No.: cust_po

LOCATION: TBA
lsd: TBA

REV.: 0

DWG. REFERENCE: —

DRAWN:	DGD	W.O. No.	SEE TABLE
DATE:	30-MAR-00	UNIT No.	–
CHK'D:		No.REQ'D:	SEE TABLE
PRJ.LDR.	B.MINSHULL	SCALE:	1:8

DWG. No. 813-6177
(SHEET1 OF1)