CONFIDENTIAL

Design Code Field Approval
Appliance Approved

for

Dynamic Combustion

Owner / Operator: Birchill Canada Limited Partnership
Plant: Birchill HZ Brazr
Area:
Map Location: 01-04-043-13-W5
Tag Number:
Appliance Type: Line Heater
Appliance Serial No: NWP-08562-001-A

Report / Print Date: 08 Jan 2021
ENEFEN Project: NFN1805015

Attention
This Appliance is approved and may be operated.
This package contains a rating/approval plate that must be attached to the appliance and may be subject to an inspection by the Authority Having Jurisdiction.

ENEFEN Energy Efficiency Engineering Ltd.

82 52A ST • Delta, BC, V4M 2Z5 • +1-780-665-2863
www.ENEFEN.com

TABLE OF CONTENTS

REPORT SECTIONS IN THIS REPORT

Report Section
Report Cover
Table of Contents
Validation and Methodology
Certificate of Conformance
Project Information
Project Summary
Appliance Data
Inspection Photos
Proof Of Correction Photos
Rating Plate Information
Fuel Composition
Setpoints
Piping and Instrumentation Diagram
System Wiring Diagram

Validation and Methodology

NFN Number	NFN1805015	Product Type	Design Code Field Approval		
Design Code	302C-A5-NW002	Project Status	Appliance Approved		
Field Evidence By	Travis Todd	Owner	Birchill Canada Limited Partnership	LOC	01-04-043-13-W5
Field Evidence	12 Jun 2018	Plant	Birchill HZ Brazr	Tag	
Report by	Christopher Pascua	Area		Serial	NWP-08562-001-A
P.Eng. Review by	Jozef Jachniak, P. Eng.	Contact	Garrett Umbach	Phone	250-263-4606

SCOPE

ENEFEN performs field inspection evaluations based on Canadian code requirements for the safety and suitability of one-of a-kind and limited run commercial and industrial gas-fired appliances and equipment that may be designed for installation at a specific site or assembled on-site. Field approvals include the application of an approval label on the appliance, an approval certificate, and a report in accordance with jurisdictional codes and requirements.

This evaluation has been completed under the Alberta Municipal Affairs Gas Code Regulation Variance VAR-GAS-03-19, which allows for a professional engineer registered with APEGA to provide an appliance approval as an alternative to the Certification Body or Inspection Body requirements under Section 3 of the Gas Code Regulation for gas-fired equipment used in process and utility applications at oil and gas production facilities. The Safety Codes Act supports an objective or performance based approach to compliance through the application of a variance under section 38. Evaluations comply with the Safety Codes Act and adopted regulations or include a risk based assessment related to the objectives of the Safety Codes Act to provide equivalent or greater safety with respect to persons, property and integrity of equipment. All components evaluated by a professional engineer include an assessment for conformance with industry-recognized published standards adopted in Canada, or in the absence of such standards with process and performance requirements, third-party test reports, and based on a history of demonstrated successful performance.

Inspection of an installed appliance includes the safety aspects of all combustion related equipment: fuel supply components; fuel train piping/components; fuel system design; fuel system and burner controls; process controls and permissives dependent on the combustion equipment. Issues found not conforming with the compulsory sections of the applicable codes given below are identified as Non-Conformances. If an issue is found that does not conform with a non-compulsory section, other codes and standards, or good engineering/industry practice, it is identified as an Observation. Such issue, although excluded from the scope of our approval, may create a potential safety hazard or affect the operation/performance of the appliance, and should be corrected.

Consulting the AHJ may be necessary to meet other jurisdictional requirements that are not in the scope of the gas-fired appliance field approval. Inspection does not include other design aspects, such as detailed compliance with the project or owner specifications, and the suitability of the equipment for any specific purpose, process conditions, or performance requirements.

APPLICABLE CODES

ENEFEN evaluates according to relevant clauses of the following codes:

CSA B149.1-15 - Natural gas and propane installation code

CSA B149.3-15 - Code for the field approval of fuel-related components on appliances and equipment

CSA STD C22.1-15 - Canadian Electrical Code, Part I Safety Standard for Electrical Installations

EVALUATION METHODS

Identify applicable standards

Travel to evaluation site

Obtain work permit

Establish communication with office

Perform safety check

Perform initial walkdown

Take overall photos of the evaluated product

Take inventory of components

Take photos of components

Check mechanical assembly methods

Check wiring methods

Check setpoints

Check permissives

Confirm non-conformances

Confirm observations

Confirm advise items

Finalize documentation / photos

Return equipment to "as-found" and "safe" state

Clean up evaluation site

Report any unsafe condition to responsible party

Report imminent danger condition to AHJ

Close work permit and advise responsible party of departure

Send initial evaluation report to client

Incorporate proof of corrections

Send final evaluation report to client

TOOLS

ASSET 00005 | Digital Camera | Olympus SP-620UZ | Serial Number Worn off | No calibration required

ASSET 00032 | Cell Phone | Apple iPhone MKQT2VC/A | Serial Number DNPRJ15VGRYG | No calibration required

ASSET 00036 | Bluetooth Headset | Jabra Stealth | Serial Number N/A | No calibration required

ASSET 00039 | Navigation System | Garmin Nuvi 265W | Serial Number 21D507110 | No calibration required

ASSET 00049 | Hand held engraver | Dremmel 8220 | Serial Number N/A | No calibration required

ASSET 00424 | Temporary Inspection Plates - Red, yellow, green, grey | Various | Serial Number N/A | No calibration required

ASSET 00489 | Tape measure short | Various | Serial Number N/A | No calibration required

OUR COMMITMENT TO QUALITY

We are committed to and passionate about the SAFETY, COMPLIANCE, HIGH EFFICIENCY and LOW ENVIRONMENTAL IMPACT of industrial and commercial energy systems. Our mission is to provide complete and high quality FIELD INSPECTIONS, ASSESSMENTS, and DESIGNS to bring you peace of mind combined with environmental and financial gains. Accredited by the Standards Council of Canada, and with staff engineers registered in a number of the Canadian provinces and territories, ENEFEN provides qualified and dependable services to a wide range of private industries.

Quality is imperative when working with fired appliances. ENEFEN has a quality management system which explains how we operate and what is expected of staff. It demonstrates to clients the level of quality and professionalism they can expect when they work with ENEFEN.

ENEFEN uses a unique project process and proprietary project tracking software to monitor project status and to store client reports. Flowcharts are available to clients to illustrate all steps that a project must follow, where client input is needed, and expected project deliverables. It is ENEFEN's goal with this process to take a systematic approach to all projects, avoid mistakes, maintain a high level of quality, and to exceed your expectations.

ENEFEN's inspection services are structured to ensure impartiality and to avoid any potential for external influences. Key staff undergo continuous surveillance to ensure their competency in meeting job requirements, however we have a formal resolution process to address any concerns or complaints you might have if we do not meet expectations.

We value your business. If you have any questions about our services or how we operate please contact us.

RESPONSIBLE PERSONNEL

These ENEFEN personnel are responsible for the results of our evaluation, and the reliability and accuracy of this report.

Report review and quality control is by: Jozef Jachniak, P. Eng. Signed on: 08 Jan 2021

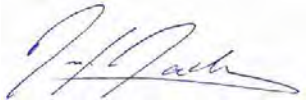

Technical supervision of this inspection is by a registered Professional Engineer: Jozef Jachniak, P.Eng. Signed on: 08 Jan 2021

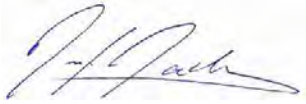

Copyright © ENEFEN Energy Efficiency Engineering Ltd. 2012-2020 All rights reserved.

No part of this report may be reproduced in any form whatsoever without the prior written permission of ENEFEN.

CERTIFICATE OF CONFORMANCE

ENEFEN Energy Efficiency Engineering Ltd.

780-665-2863 www.ENEFEN.com

FIELD APPROVAL NUMBER: **NFN1805015** **Rev 20210108_1726**
REPORT DATE: **08 JAN 2021**
PRODUCT: **Design Code Field Approval**

Prepared By	Christopher Pascua	**Reviewed By**	Jozef Jachniak, P. Eng.
Client/Consultant	Dynamic Combustion	**Elevation**	3750 ft | 1143 m
Contact	Garrett Umbach	**Jurisdiction**	Alberta Municipal Affairs
Email	gumbach@dynamiccombustion.ca,kschatz@birchill.com	**Program**	VAR-GAS-03-19
Tel	250-263-4606	**Process**	Gas Well
Cell	250-263-7195	**Function**	Indirect Fired Gas Heating
Owner/Operator	Birchill Canada Limited Partnership	**Appliance**	Line Heater
Plant	Birchill HZ Brazr	**Appliance Tag**	
Area		**Map Location**	01-04-043-13-W5
		Serial Number	NWP-08562-001-A

Appliance Approved
Project Category: Gas Appliance Field Approval
Validity: Under the authority given to Professional Engineers by Alberta Municipal Affairs as per the requirements of the Gas Code Regulation Variance VAR-GAS-03-19.
Conditions of Approval:

- The rating plate must be attached to the appliance
- Subject to local regulatory restrictions and applicable permits(eg. gas and electrical)
- The Appliance Maximum Fuel Input (HHV) on the rating plate must not be exceeded
- Alteration or relocation will void the approval (unless approved as movable appliance)
- The Authority Having Jurisdiction (AHJ) may choose to examine the appliance, rating plate or report.

I hereby attest that this installed appliance meets all of the jurisdictional requirements and is approved as inspected according to this project report.

APPROVED BY:
Jozef Jachniak, P. Eng.

APPROVED DATE:
08 Jan 2021

PERMIT TO PRACTICE:
P08977

PROFESSIONAL ENGINEER ALBERTA
JOZEF JACHNIAK

PROJECT INFORMATION 20210108_1726

ENEFEN Number	NFN1805015
Product	Design Code Field Approval
Design code	302C-A5-NW002
Project description	
Jurisdiction	Alberta Municipal Affairs
Program	VAR-GAS-03-19

Appliance Identification

Process	Gas Well
Function	Indirect Fired Gas Heating
Type	Line Heater
Tag Number	
Name	
Map Location	01-04-043-13-W5
Plant	Birchill HZ Brazr
Area	
Serial Number	NWP-08562-001-A
Site elevation	3750 ft | 1143 m
CRN number	
Alberta number	

Appliance Information

Manufacturer	NWP Industries Inc.
Project number	
Built where	
Date built	2012
Model number	
Installed by	Dynamic Combustion
Project number	2018-033
New or upgrade	Upgrade
Date	

PROJECT INFORMATION

Client Information

Company name	Dynamic Combustion		
Project number	2018-033		
Branch/plant	Fort St. John Office		
Department/area			
Contact name	Garrett Umbach		
Contact email	gumbach@dynamiccombustion.ca,kschatz@birchill.co		
Contact phone	250-263-4606	**Extension**	
Contact cell	250-263-7195	**Fax**	

Owner/Operator Information

Company name	Birchill Canada Limited Partnership		
Project number			
Branch/plant	Birchill HZ Brazr		
Department/area			
Contact name	Kevin Schatz		
Contact email	kschatz@birchill.com		
Contact phone	403-815-3801	**Extension**	
Contact cell		**Fax**	

Consultant Information

Company name	N/A		
Project number			
Branch/plant			
Department/area			
Contact name			
Contact email			
Contact phone		**Extension**	
Contact cell		**Fax**	

PROJECT SUMMARY

NFN Number	NFN1805015	Product Type	Design Code Field Approval		
Design Code	302C-A5-NW002	Project Status	Appliance Approved		
Field Evidence By	Travis Todd	Owner	Birchill Canada Limited Partnership	LOC	01-04-043-13-W5
Field Evidence	12 Jun 2018	Plant	Birchill HZ Brazr	Tag	
Report by	Christopher Pascua	Area		Serial	NWP-08562-001-A
P.Eng. Review by	Jozef Jachniak, P. Eng.	Contact	Garrett Umbach	Phone	250-263-4606

CODE COMPLIANCE SUMMARY

Fuel train layout compliant?	Yes
Fuel train sizing compliant?	Yes
Fuel train installation compliant?	Yes
Burner design compliant?	Yes
Burner installation compliant?	Yes
BMS FSG design compliant?	Yes
BMS FSG installation compliant?	Yes
Permissives design compliant?	Yes
Permissives installation compliant?	Yes
Controls design compliant?	Yes
Controls installation compliant?	Yes
Appliance design compliant?	Yes
Appliance installation compliant?	Yes
Flammable gas venting compliant?	Yes
Stack installation compliant?	Yes
All components certified or approved?	Yes
All technical documentation complete?	Yes
System Compliant with CSA B149.3?	Yes

OBSERVATION Response is not mandatory but may be provided to record in the report

Fuel Gas PSHH Setpoint	120.7 kPag | 17.5 psig | Accepted based on appliance application and high excess air in stack, there is no safety concern with the pressure high-high setpoint.	Observation

APPLIANCE DATA

20210108_1726

NFN Number	NFN1805015	Product Type	Design Code Field Approval		
Design Code	302C-A5-NW002	Project Status	Appliance Approved		
Field Evidence By	Travis Todd	Owner	Birchill Canada Limited Partnership	LOC	01-04-043-13-W5
Field Evidence	12 Jun 2018	Plant	Birchill HZ Brazr	Tag	
Prepared By	Christopher Pascua	Area		Serial	NWP-08562-001-A
Reviewed By	Jozef Jachniak, P. Eng.	Contact	Garrett Umbach	Phone	250-263-4606

128 LOCATION INFORMATION

Burner Location	Outdoor	Noted
Fuel Train Location	Inside Enclosure	Noted
Control Panel Location	Outdoor	Noted
Building or Enclosure Features	Building/Enclosure heated by uninsulated vessel.	Noted
Appliance Ambient Temperature Rating	-29°C to 40°C | -20°F to 104°F	Noted

161 PROCESS INFORMATION

Process	Gas Well	Noted
Process Cycle percent	100 %	Noted
Annual Operation Percent	100 %	Noted
Appliance Function	Indirect Fired Gas Heating	Noted
Appliance Type	Line Heater	Noted
Process Fluid	Natural Gas	Noted
Bath Fluid	Glycol	Noted

162 APPLIANCE INFORMATION

Process Duty	1.94 GJ/h | 1.84 MM Btuh	Noted
Appliance Efficiency HHV	77.1 %	Noted
Fuel Total Input (HHV)	2.52 GJ/h | 2.39 MM Btuh	Noted
Flame Safeguard System Logic Type	Single Burner FSG	Noted
Number of Burners	2	Noted
Burner Fuel Input (HHV)	1.261 GJ/h | 1.195 MM Btuh	Noted
Main Burner Max. Design Pressure	83 kPag | 12.0 psig	Noted
Main Burner Min. Design Pressure	6.9 kPag | 1.0 psig	Noted
Burner Turndown	3.46 : 1	Noted
Pilot Configuration	Separate premix pilot	Noted
Pilot Type	Intermittent / Continuous	Noted
Pilot Fuel Input (HHV)	0.03 GJ/h | 0.03 MM Btuh	Noted
Pilot Pressure	48 kPag | 7.0 psig	Noted
Ignition Type	Electric ignition from BMS	Noted
Instrument Control Method	Electric / Pneumatic	Noted
Is it a Pressure Vessel	No. Process Coils are pressurized but heater shell is not.	Noted
CRN Number	Process Coils ~ P9417.213	Noted
Alberta A Number	Process Coils ~ 605748	Noted

163	PRIMARY FUEL SUPPLY	
Primary Fuel Type	Produced Gas	Noted
Is Primary Fuel Sweet	Sweet < 5ppm H2S	Noted
Is Primary Fuel Dry	Wet	Noted
Primary Fuel Source	Gas well	Noted
Primary Fuel Composition Known	Unknown. Estimated to have similar heating value to standard sales gas composition.	Noted
Primary Fuel Inlet Pressure	689 kPag | 100.0 psig	Noted
Primary Fuel Odorization	Not Odorized	Noted
Primary Fuel Scrubber	Mechanical Scrubber	Noted
Primary Fuel Filter	Y-Strainer installed upstream of the main fuel train PRV.	Noted
Primary Fuel Overpressure Protection	Upstream PSV protects the main PRV.	Noted
Primary Fuel Overpressure Protection Device (OPPD)	Mercer safety relief valve	Noted
Primary Fuel OPPD Setpoint	1034 kPag | 150.0 psig	Noted
Primary Fuel Preheat	Preheat through bath fluid	Noted
Line Pressure Control Device	Fisher 627 ~ 3/16in. orifice ~ 70-150psi spring ~ 1000psi max inlet ~ -50°C	Noted
Line Pressure Control Device Setpoint	689 kPag | 100.0 psig	Noted

164	SECONDARY FUEL SUPPLY	
Secondary Fuel Type	Not approved for secondary fuel use	Noted

165	PILOT FUEL SUPPLY	
Pilot Fuel Type	Produced Gas	Noted
Is Pilot Fuel Sweet	Sweet < 5ppm H2S	Noted
Is Pilot Fuel Dry	Wet	Noted
Pilot Fuel Source	Same as main fuel train	Noted
Pilot Fuel Composition Known	Unknown. Estimated to have similar heating value to standard sales gas composition.	Noted
Pilot Fuel Inlet Pressure	689 kPag | 100.0 psig	Noted
Pilot Fuel Odorization	Not Odorized	Noted
Pilot Fuel Scrubber	Same as main fuel train	Noted
Pilot Fuel Filter	Y-Strainer in the main fuel train upstream of the pilot take-off.	Noted
Pilot Fuel Overpressure Protection Device (OPPD)	Upstream PSV protects the pilot PRV.	Noted
Pilot Fuel OPPD Setpoint	1034 kPag | 150.0 psig	Noted
Pilot Fuel Preheat	Preheat through bath fluid	Noted

170	INSTRUMENT GAS INFORMATION	
Instrument Gas Type	Produced Gas	Noted
Is Instrument Gas Sweet	Sweet	Noted
Is Instrument Gas Dry	Wet	Noted
Instrument Gas Source	Upstream of main fuel train regulator.	Noted
Instrument Gas Inlet Pressure	689 kPag | 100.0 psig	Noted
Instrument Gas Filter	Integral to instrument pressure regulator.	Noted
Instrument Gas Overpressure Protection Device (OPPD)	PSV integral to instrument gas PRV	Noted
Instrument Gas PRV for FCV	Fisher 67CFR ~ 0-35psi spring ~ 250psi max inlet ~ -29°C	Noted
Instrument Gas PRV for FCV Setpoint	152 kPag | 22.0 psig	Noted
Instrument Gas for FCV Minimum Pressure	103 kPag | 15 psig	Noted
Instrument Gas for FCV Maximum Pressure	207 kPag | 30 psig	Noted
Instrument Gas PRV for SSV	Fisher 67CFR ~ 0-125psi spring ~ 250psi max inlet ~ -50°C	Noted
Instrument Gas PRV for SSV Setpoint	517 kPag | 75.0 psig	Noted
Instrument Gas for SSV Minimum Pressure	483 kPag | 70 psig	Noted
Instrument Gas for SSV Maximum Pressure	827 kPag | 120 psig	Noted

172	ELECTRICAL INFORMATION	
Electrical Area Classification at Burner	Non-Hazardous	Noted
Electrical Area Classification at Fuel Train	Zone 1	Noted
Electrical Area Classification at Control Panel	Zone 2	Noted
Available Primary Main Power	120 VAC / 60 Hz	Noted
Available Primary Main Power Source	Utility / Grid	Noted
Primary Main Power Amps	15.0 amps	Noted
Available Primary Control Power	24 VDC	Noted
Available Primary Control Power Source	TEG	Noted
Primary Control Power Amps	4.0 amps	Noted
Hazardous Area Electric Seals Installed	At the building/enclosure wall (ie. Zone 1/2 boundary), At the windbox (ie. Zone 2 / Non-hazardous boundary)	Noted
Are All Required Hazardous Area Electric Seals Installed	All Hazardous Area Electric Seals are properly installed.	Noted
Wiring Method Inside the Building \ Enclosure	Explosion-proof Junction Boxes, Rigid Conduit	Noted

181	APPLIANCE SHELL	
Shell Type	Horizontal with expansion tank above	Noted
Shell OD	1829 mm | 72.00 in	Noted
Shell Length / Height	7 m | 24.00 ft	Noted
Shell Insulation Scope	Fully insulated without end plates	Noted
Shell Insulation Thickness	51 mm | 2.00 in	Noted

182	HEATER FIRETUBE	
Number of Firetubes	1	Noted
Firetube Type	Horizontal U-tube with constant diameter.	Noted
Number of Passes	2	Noted
Firetube OD	610 mm | 24.00 in	Noted
Immersed Length of Assembly	7 m | 22.00 ft	Noted
Firetube Surface Area	30 m² | 318 ft²	Noted
Firetube Nominal Process Rating	3.35 GJ/h | 3.18 MM Btuh	Noted
Firetube Design Process Rating	1.94 GJ/h | 1.84 MM Btuh	Noted
Firetube Design Heat Flux	65.87 MJh/m² | 5800 Btuh/ft²	Noted
Firetube Achievable Efficiency (HHV)	77.4 %	Noted
Firetube Appliance Efficiency HHV	77.1 %	Noted
Firetube Condition	Firetube acceptable	Noted

183	APPLIANCE STACK	
Stack Type	Same diameter as firetube	Noted
Stack OD	610 mm | 24.00 in	Noted
Stack Height	5 m | 17.00 ft	Noted
Stack Wind Shroud	None	Noted
Stack Cap	None	Noted
Stack Damper	None	Noted
Stack Insulation Scope	None	Noted
Drain Port Plug	Stack drain port not installed.	Noted
Stack Cleanout Port	Reduced-size horizontal port	Noted
Stack Sampling Port	Drilled hole with plug.	Noted

184	APPLIANCE WINDBOX	
Windbox Manufacturer	Wenco Energy Corp.	Noted
Windbox Serial Number	1112-622	Noted
Windbox Material	Aluminum Welded	Noted
Windbox Type	Round hinged door w/bolts	Noted
Wind Box Gasket	All required gaskets are installed and in good condition.	Noted
Windbox ID	1067 mm | 42.00 in	Noted
Windbox Depth	610 mm | 24.00 in	Noted
Windbox Volume	0.545 m³ | 19.242 ft³	Noted
Windbox Size Factor	0.216 m³/GJh | 8.05 ft³/MM Btuh	Noted
Windbox Gas CL to Liquid	102 cm | 40 in	Noted
Windbox Gas CL to Burner Tip	122 cm | 48 in	Noted
Burner tip insertion depth	20 cm | 8 in	Noted
Burner Access	Hinged front door with bolts	Noted
Windbox Air Adjustment	None	Noted
Windbox Viewport	1 inch glass peep sight	Noted
Is the Ignition Transformer Module mounted correctly	Yes.	Noted

185	APPLIANCE FLAME CELL	
Number of Flame Cells Per Windbox	1	Noted
Flame Cell Material	Aluminum	Noted
Flame Cell Location	Front	Noted
Flame Cell OD	1067 mm | 42.00 in	Noted
Flame Cell ID	203 mm | 8.00 in	Noted
Total Flame Cell Surface Area	0.86 m^2 | 0.00 ft^2	Noted
Flame Cell Size Factor	0.34 m^2/GJh | 0.00 ft^2/MM Btuh	Noted

186	MAIN BURNER	
Number of Burners per Appliance	2	Noted
Are All Main Burners Identical	Yes.	Noted
Burner Make	ACL	Noted
Burner Size	2 in | 51 mm	Noted
Burner Mixer	ACL M200	Noted
Main Burner Orifice Size	#2 | 5.61 mm | 0.22 in	Noted
Burner Sleeve	ACL venturi burner barrel	Noted
Burner Nozzle	ACL Optimizer Nozzle (with air spinner)	Noted
Burner Fuel Input Capacity (HHV)	2.638 GJ/h | 2.500 MM Btuh	Noted
Burner Capacity Utilization	48 %	Noted

187	PILOT BURNER	
Pilot Make	ACL	Noted
Pilot Size	1/2 in | 12.7mm | 0.50in	Noted
Pilot Mixer	ACL M50	Noted
Pilot Burner Orifice Size	#65 | 0.8890mm | 0.0350in	Noted
Pilot Sleeve	Straight Pipe Nipple	Noted
Pilot Nozzle	ACL M50 pilot assembly	Noted
Pilot Location	Between Burners at 3:00 and 9:00	Noted

188	COMBUSTION AIR	
Combustion Air Source	Natural Draft	Noted
Combustion Air Preheat	No Preheat	Noted
Primary Air Control Type	At burner mixer with air shutter	Noted
Secondary Air Control Type	ACL spinner with adjustable louvers	Noted

189	APPLIANCE PERMISSIVES	
Liquid Low Level LSLL Location	In external bridle.	Noted
Isolation Valves Installed on LSLL	1/4 turn isolation valve locked and tagged.	Noted
Liquid Low Level LSLL Type	Single point electric float	Noted
Liquid Low Level LSLL Make	SOR 1510 ending with CS float switch ~ Class I-Div.1 ~ -40°C to 125°C	Noted
Level Switch Orientation	Manual override button points down (enabled).	Noted
Process TSHH Location	In the main tank	Noted
Process TSHH Type	Temperature switch to BMS.	Noted
Process TSHH Make	CCS 6900TE-series ~ Class I-Div.1 ~ -40°C	Noted
Process TSHH Setpoint	90 °C | 194 °F	Noted
Process TSHH Separate From Process Controller	Yes.	Noted
Fuel Gas PSLL Location	Upstream of SSVs	Noted
Fuel Gas PSLL Type	Electric pressure switch	Noted
Fuel Gas PSLL Make	CCS 6900GZE12 ~ 1-18psig range (2psi deadband) ~ Class I-Div.1 ~ -40°C	Noted
Fuel Gas PSLL Setpoint	41.4 kPag | 6.0 psig	Noted
Fuel Gas PSHH Location	Downstream of SSVs and upstream of FCV	Noted
Fuel Gas PSHH Type	Electric pressure switch	Noted
Fuel Gas PSHH Make	CCS 6900GZE12 ~ 3-20psig range ~ Class I-Div.1 ~ -40°C	Noted
Fuel Gas PSHH Setpoint	120.7 kPag | 17.5 psig | Accepted based on appliance application and high excess air in stack, there is no safety concern with the pressure high-high setpoint.	Observation
Isolation Valves Installed on High Pressure Shutdown Device	1/4 turn isolation valve locked and tagged.	Noted
Isolation Valves Installed on Low Pressure Shutdown Device	1/4 turn isolation valve locked and tagged.	Noted
Plant ESD Connected	Yes.	Noted

190	COMBUSTION SAFETY CONTROL	
Combustion Safety Control Type	Prepackaged / CSA Certified.	Noted
Combustion Safety Control Make	ACL 5500 ~ CSA22.2 No.199-M89 ~ Class I-Div.2 ~ -40°C	Noted
Flame Sensor	Flame Rod	Noted
Remote BMS Connections	Interlocks to plant control system, ESD, Status	Noted
BMS Serial Number	55-12/24-092712-10	Noted
BMS Temperature Input	External temperature switch (TSHH).	Noted
TSHH Interlocked with BMS	Yes.	Noted
BMS has a pre-purge function	Yes.	Noted
Ignition Transformer Make	ACL Ignition Module ~ CSA certified ~ Class I-Div.2 ~ -40ºC	Noted

192	APPLIANCE CONTROL SYSTEM	
Process Control Element Location	TE in the main tank	Noted
Process Controller Type	Modulating - Pneumatic	Noted
Controller Temperature Setpoint	45 °C | 113 °F	Noted
Bath Fluid Temperature	40.0 °C | 104.0 °F	Noted
Process Controller Make	Kimray HT12 ~ 5-30psi pneumatic ~ -34°C to 399°C	Noted
TSH Type	Pneumatic thermostat.	Noted
Fuel FCV Make	Fisher 119 ~ 5-35psig actuation ~ 35-150psig instrument gas supply ~ 150psig max ~ -29°C	Noted
FCV 3-way Solenoid	Not installed.	Noted
FCV Speed Control Valve	SMC NAS4000-N02	Noted
Fuel Low Fire Start	Pneumatic SSV with speed control valve.	Noted
Fuel Minimum Fire Stop	Not installed.	Noted
Low Fire Start For System Over 1 MM Btuh	Yes.	Noted
Fuel Measurement Method	None	Noted

193	MAIN FUEL TRAIN	
Main Fuel Manual Shut-off Valve	MAS G2E-series ball valve (1/4-2in. size)(SS) ~ CGA 3.16 ~ 125psig max ~ -40°C	Noted
Main Fuel Train Filter	Y-strainer installed upstream of main fuel train PRV and pilot take-off.	Noted
Is Appliance Manual Fuel Shut-off Easily Accessible	Yes.	Noted
Main Fuel Pressure Control Device Configuration	Single Pressure Regulator.	Noted
Appliance Main Fuel Pressure Control Device	BelGas R627 ~ 3/8in. orifice ~ 5-20psig spring ~ 300psig max inlet ~ -29°C ~ with internal relief	Noted
Appliance Main Fuel Pressure Control Device Setpoint	82.7 kPag | 12.0 psig	Noted
Appliance Fuel Overpressure Protection	Two regulators in series with setpoints below the lowest rated component.	Noted
Main Safety Shut-off Valve Configuration	Single SSV with proof of closure switch	Noted
Main Safety Shut-off Valve Type	Electro-pneumatic valve(s)	Noted
Main Safety Shut-off Valve Make (single valve)	Fossil (FPS) 9650-series ~ CSA 6.5-C/I ~ 70-120psig actuation ~ 200psig max ~ -45°C	Noted
Main SSV(s) Slow Opening	Yes. Using speed control valve. SMC NAS4000-N02.	Noted
Main Burner Test Firing Valve	MAS G2E-series ball valve (1/4-2in. size)(SS) ~ CGA 3.16 ~ 125psig max ~ -40°C	Noted
Are pressure indicator locations adequate	Yes.	Noted
Are pressure indicator ranges adequate	Yes.	Noted
Are pressure test points adequate	Yes.	Noted
Main Fuel Train Piping	Carbon steel piping	Noted
Sufficient unions / flanges for maintenance	Yes.	Noted
Is Piping Adequately supported	Yes.	Noted

194	PILOT FUEL TRAIN	
Pilot Fuel Take-off	From between main fuel train filter and regulator.	Noted
Pilot Fuel Manual Shut-Off Valve	MAS G2E-series ball valve - 1/4-2in. (SS) ~ CGA 3.16 ~ 125psig max ~ -40°C	Noted
Pilot Pressure Control Device Configuration	Single Pressure Regulator.	Noted
Pilot Pressure Control Device	Fisher 67CFR ~ 0-35psi spring ~ 250psi max inlet ~ -29°C	Noted
Pilot Pressure Control Device Setpoint	48.3 kPag | 7.0 psig	Noted
Pilot Overpressure Protection	PSV integral to pilot PRV.	Noted
Pilot OPPD Setpoint	69 kPag | 10.0 psig	Noted
Pilot SSV Configuration	Single SSV	Noted
Pilot SSV Type	Electric Solenoid valve(s)	Noted
Pilot SSV Make (single valve)	ASCO HV426716002 24VDC ~ CSA 6.5-C/I ~ Class I-Div.1 ~ 50psig MOPD ~ 100psig SWP ~ -40°C	Noted
Pilot Test Firing Valve	MAS G2E-series ball valve (1/4-2in. size)(SS) ~ CGA 3.16 ~ 125psig max ~ -40°C	Noted
Are pressure indicator locations adequate	Yes.	Noted
Are pressure indicator ranges adequate	Yes.	Noted
Are pressure test points adequate	Yes.	Noted
Pilot Fuel Train Piping	Carbon steel piping and stainless steel tubing	Noted
Sufficient unions / flanges for maintenance	Yes.	Noted
Is Piping Adequately supported	Yes. Pilot fuel train piping outside of the enclosure is tied with the main fuel train piping for support.	Accepted

224	INSTALLATION - FLAMMABLE GAS VENTING	
Vent Piping Materials	Stainless steel tubing	Noted
Is Sour Gas Vented	No	Noted
Are Vent Line Connection Sizes to Devices Maintained	Yes	Noted
Are Combined Vents Increased in Size	Combined vents are properly installed.	Noted
Are There Any Vent Lines Under The Building / Enclosure	No	Noted
Are Vent Terminations Away From Building Openings and Air Intakes	Yes	Noted
Are Any Vent Line Terminations Close to Operating Personnel	No	Noted
Are Vent Terminations Equipped With Screens	All required screens are properly installed.	Noted
Are Vent Line Terminations Protected From Water Entry	Yes	Noted
Is Piping Adequately Supported	Yes.	Noted
Fuel Supply Line Pressure Control Device Properly Vented	Yes	Noted
Fuel Supply Overpressure Protection Device Properly Vented	Yes	Noted

APPLIANCE DATA

261 STACK READINGS

Source of Combustion Readings	Installer	Noted
Date of Combustion Readings	05 Apr 2018	Noted
Main Burner Pressure	83 kPag | 12.0 psig	Noted
Process Temperature	45 °C | 113 °F	Noted
Ambient Temperature	4 °C | 39 °F	Noted
Stack Temperature	338 °C | 640 °F	Noted
Stack Oxygen	5.7 %	Noted
Stack CO	0 ppm	Noted
Stack NOx	56 ppm	Noted
Excess Air	33.3 %	Noted
Draft Pressure	-0.161 in.WC	Noted
Efficiency (HHV)	77.1 %	Noted
Stack Temperature Notes	High. Stack temp between 350-650°F/195-360°C above bath temp. May result in lower efficiency.	Noted
Excess Air Notes	O2 is in the high range of 5.5-8.0% and may result in lower efficiency.	Noted
Carbon Monoxide Notes	Less than 50 ppm is ideal.	Noted
NOx Notes	High but typical for this type of burner, in the range of 50-100 ppm (3% O2 basis).	Noted
Efficiency Notes	Efficiency is acceptable in the range of 72 to 78%.	Noted

END OF REPORT SECTION

FIELD INSPECTION PHOTOS 20210108_1726

Appliance		Owner	
Tag Number		Company	Birchill Canada Limited Partnership
LOC	01-04-043-13-W5	Plant	Birchill HZ Brazr
Serial No.	NWP-08562-001-A	Area	

Overall view of appliance

Lease sign

Appliance rating plate

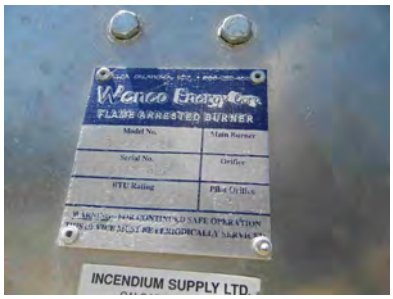

Windbox name plate

Windbox - overall view

Burner Management System - BMS

BMS Serial Number

BMS wiring

Overall view of fuel train

Upstream overpressure protection - PSV

Line Pressure Regulator

Manual shut-off valve and Y-strainer

FIELD INSPECTION PHOTOS

Main fuel train pressure regulator - PRV

PSLL calibration tag

PSLL - Low pressure shutdown

Isolation valve on pressure switch (PSLL)

Main fuel train safety shut-off valve - SSV

Instrument gas regulator (PRV) to SSV

Speed control valve for SSV

FCV - Main flow control valve

Instrument gas regulator (PRV) to FCV

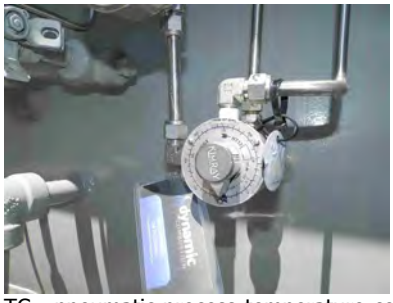
TC - pneumatic process temperature control

Speed control valve for FCV

PSHH - High pressure shutdown

FIELD INSPECTION PHOTOS

PSHH calibration tag

Main burner test firing valve

Pilot manual fuel shut-off valve

Pilot pressure regulator - PRV

Pilot safety shut-off valve - SSV

Pilot fuel train not supported (NON-CONFORMANCE)

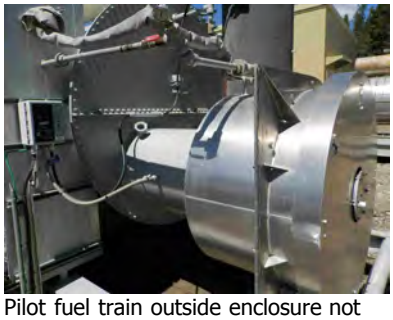
Pilot fuel train outside enclosure not supported (NON-CONFORMANCE)

Pilot burner test firing valve

Main burner and pilot close-up

LSLL - Low bath fluid shutdown

TSHH - High temperature shutdown

Stack

FIELD INSPECTION PHOTOS

Stack sampling port

Vent lines

Vent lines

Vent line terminations,Vent lines

Vent lines

Vent line terminations

Hazardous area conduit seal at the wall

ENEFEN temporary Field Inspection Plate

PROOF OF CORRECTIONS PHOTOS

20210108_1726

Appliance		Owner	
Tag Number		Company	Birchill Canada Limited Partnership
Map Location	01-04-043-13-W5	Plant	Birchill HZ Brazr
Serial No.	NWP-08562-001-A	Area	

Pilot fuel train tied with main fuel train for support

Pilot fuel train tied with main fuel train for support

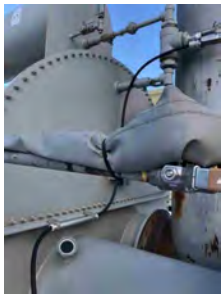

Pilot fuel train tied with main fuel train for support

RATING PLATE

NFN Number	NFN1805015	Product Type	Design Code Field Approval		
Design Code	302C-A5-NW002	Project Status	Appliance Approved		
Field Evidence By	Travis Todd	Owner	Birchill Canada Limited Partnership	LOC	01-04-043-13-W5
Field Evidence	12 Jun 2018	Plant	Birchill HZ Brazr	Tag	
Report by	Christopher Pascua	Area		Serial	NWP-08562-001-A
P.Eng. Review by	Jozef Jachniak, P. Eng.	Contact	Garrett Umbach	Phone	250-263-4606

FIRED APPLIANCE RATING PLATE

Dynamic Combustion
RR1 Site 6 Compartment 14, Fort St. John, BC V1J 4M6

Appliance Manufacturer	NWP Industries Inc.
Built Date	2012
Serial Number	NWP-08562-001-A
New Install or Upgrade	Upgrade
Installation Company	Dynamic Combustion
Installation Project Number	2018-033
Appliance Type	Line Heater
Map Location	01-04-043-13-W5
Elevation Above Sea Level	3750 ft | 1143 m
Appliance Temperature Rating	-29°C to 40°C | -20°F to 104°F
Primary Fuel Type	Produced Gas
Primary Fuel Quality	Sweet < 5ppm H2S and Wet
Primary Fuel Inlet Pressure	689 kPag | 100.0 psig
Primary Fuel Protected Pressure	1034 kPag | 150.0 psig
Secondary Fuel Type	Not approved for secondary fuel use
Pilot Fuel Type	Produced Gas
Pilot Fuel Quality	Sweet < 5ppm H2S and Wet
Pilot Fuel Inlet Pressure	689 kPag | 100.0 psig
Appliance Max Fuel Input (HHV)	2.52 GJ/h | 2.39 MM Btuh
Number of Burners per Appliance	2
Max. Fuel Gas Burner Pressure	83 kPag | 12.0 psig
Min. Fuel Gas Burner Pressure	6.9 kPag | 1.0 psig
Pilot Fuel Gas Burner Pressure	48 kPag | 7.0 psig
Instrument Gas Type	Produced Gas
Instrument Gas Minimum Pressure	483 kPag | 70 psig
Electrical Area Class At Burner	Non-Hazardous
Electrical Area Class At Fuel Train	Zone 1
Electrical Area Class At Control Panel	Zone 2
Primary Main Power	120 VAC / 60 Hz | 15.0 amps
Primary Control Power	24 VDC | 4.0 amps

FUEL FIRED APPLIANCE FIELD APPROVAL
ENEFEN ENERGY EFFICIENCY ENGINEERING LTD.

Field Approval Number: NFN1805015
Approval Date: 08 Jan 2021
Approved By: Jozef Jachniak, P. Eng.

ENEFEN evaluation is based on the authority given to Professional Engineers by Alberta Municipal Affairs as per the requirements of the Gas Code Regulation Variance VAR-GAS-03-19. This approval represents the results of a single field inspection and is not a product certification. This approval is void if this appliance is altered or relocated.

FUEL COMPOSITION REPORT

20210108_1726

NFN Number	NFN1805015	Product Type	Design Code Field Approval		
Design Code	302C-A5-NW002	Project Status	Appliance Approved		
Field Evidence By	Travis Todd	Owner	Birchill Canada Limited Partnership	LOC	01-04-043-13-W5
Field Evidence	12 Jun 2018	Plant	Birchill HZ Brazr	Tag	
Report by	Christopher Pascua	Area		Serial	NWP-08562-001-A
P.Eng. Review by	Jozef Jachniak, P. Eng.	Contact	Garrett Umbach	Phone	250-263-4606

Fuel Usage	**Pilot Fuel**	**Main Fuel**
Fuel Type	**Produced Gas**	**Produced Gas**
Fuel Info Source	**Estimated**	**Estimated**
Reported Date		
Fuel Temperature °C/°F	15.6 / 60.1	15.6 / 60.1
C1 Methane	0.9300	0.9300
C2 Ethane	0.0600	0.0600
C3 Propane	0.0020	0.0020
C4 Butane	0.0000	0.0000
C5 Pentane	0.0000	0.0000
C6 Hexane	0.0000	0.0000
C7 heptane	0.0000	0.0000
C8 as Octane	0.0000	0.0000
C_6H_6 Benzene	0.0000	0.0000
CO Carbon Monoxide	0.0000	0.0000
H_2 Hydrogen	0.0000	0.0000
S Sulfur Vapor	0.0000	0.0000
COS Carbonyl Sulfate	0.0000	0.0000
CS_2 Carbon Disulfide	0.0000	0.0000
$C_2H_6S_2$ Dimethyl Disulfide	0.0000	0.0000
CH_3SH Mercaptan	0.0000	0.0000
O_2 Oxygen	0.0000	0.0000
N_2 Nitrogen & Inert	0.0050	0.0050
CO_2 Carbon Dioxide	0.0030	0.0030
SO_2 Sulfur Dioxide	0.0000	0.0000
Molecular Weight MW	17.0834	17.0834
Fuel Density lb/ft^3 | kg/m^3	0.045 | 0.7245	0.045 | 0.7245
Specific Volume ft^3/lb | m^3/kg	22.109 | 1.3803	22.109 | 1.3803
Specific Gravity	0.5910	0.5910
Specific Heat Btu/lb/°F | kJ/kg/°C	0.5081 | 2.1274	0.5081 | 2.1274
Sulfur Content By Weight	0.0000	0.0000
HHV English Btu/scf | Btu/lb	**1050 | 23300**	**1050 | 23300**
HHV Metric MJ/m^3 | MJ/kg	**39.2 | 54.2**	**39.2 | 54.2**
LHV English Btu/scf | Btu/lb	950 | 21000	950 | 21000
LHV Metric MJ/m^3 | MJ/kg	35.4 | 48.9	35.4 | 48.9
Combustion O_2 ft^3/ft^3	2.0800	2.0800
H_2O in POC ft^3/ft^3	2.0480	2.0480
CO_2 in POC ft^3/ft^3	1.0590	1.0590
N_2 in POC ft^3/ft^3	7.8772	7.8772
SO_2 in POC ft^3/ft^3	0.0000	0.0000

FINAL SETPOINTS

20210108_1726

NFN Number	NFN1805015	Product Type	Design Code Field Approval		
Design Code	302C-A5-NW002	Project Status	Appliance Approved		
Field Evidence By	Travis Todd	Owner	Birchill Canada Limited Partnership	LOC	01-04-043-13-W5
Field Evidence	12 Jun 2018	Plant	Birchill HZ Brazr	Tag	
Prepared By	Christopher Pascua	Area		Serial	NWP-08562-001-A
Reviewed By	Jozef Jachniak, P. Eng.	Contact	Garrett Umbach	Phone	250-263-4606

Main Burner Maximum Pressure	83 kPag | 12.0 psig
Main Burner Minimum Pressure	6.9 kPag | 1.0 psig
Pilot Pressure	48 kPag | 7.0 psig
Primary Fuel Inlet Pressure	689 kPag | 100.0 psig
Primary Fuel OPPD	1034 kPag | 150.0 psig
Line Pressure Control Device	689 kPag | 100.0 psig
Pilot Fuel Inlet Pressure	689 kPag | 100.0 psig
Pilot Fuel OPPD	1034 kPag | 150.0 psig
Instrument Gas Inlet Pressure	689 kPag | 100.0 psig
Instrument Gas PRV for FCV	152 kPag | 22.0 psig
Instrument Gas for FCV Minimum Pressure	103 kPag | 15 psig
Instrument Gas for FCV Maximum Pressure	207 kPag | 30 psig
Instrument Gas PRV for SSV	517 kPag | 75.0 psig
Instrument Gas for SSV Minimum Pressure	483 kPag | 70 psig
Instrument Gas for SSV Maximum Pressure	827 kPag | 120 psig
Process TSHH	90 °C | 194 °F
Fuel Gas PSLL	41.4 kPag | 6.0 psig
Fuel Gas PSHH	120.7 kPag | 17.5 psig
Controller Temperature	45 °C | 113 °F
Appliance Main Fuel Pressure Control Device	82.7 kPag | 12.0 psig
Pilot Pressure Control Device	48.3 kPag | 7.0 psig
Pilot OPPD	69 kPag | 10.0 psig

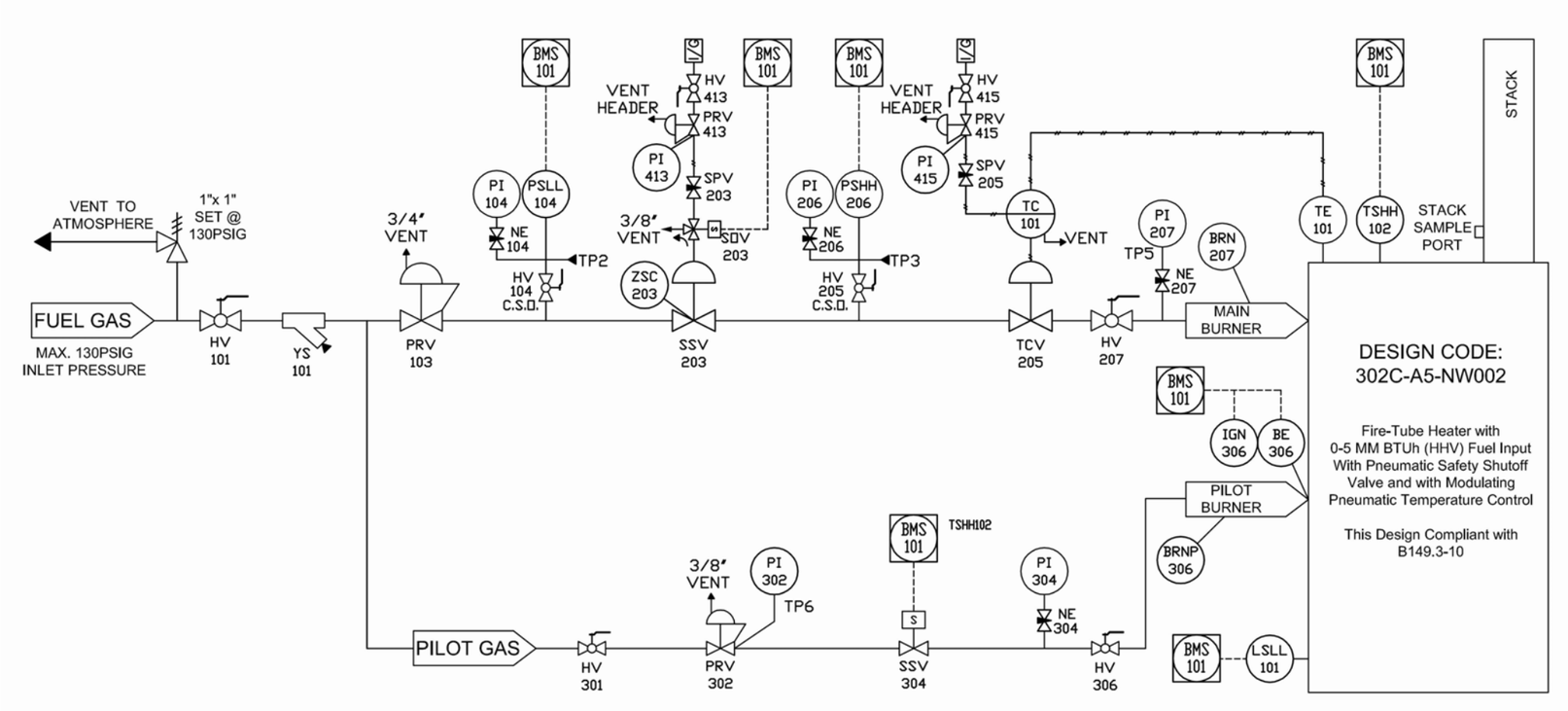

DESIGN SPECIFICATIONS

Owner Project Number	--
Owner Name	Birchill Canada Limited Partnership
Client Name	Dynamic Combustion
Plant / Branch	Birchill HZ Brazr
Area / Department	--
Map Location	01-04-043-13-W5
Appliance Function	Indirect Fired Gas Heating
Appliance Tag Number	--
Appliance Manufacturer	NWP Industries Inc.
Location Built In	--
Built Date	2012
Appliance Type	Line Heater
Appliance Max Fuel Input (HHV)	2.52 GJ/h | 2.39 MM Btuh
Primary Fuel Type	Produced Gas
Primary Fuel Inlet Pressure	689 kPag | 100.0 psig
Primary Fuel Protected Pressure	1034 kPag | 150.0 psig
Pilot Fuel Type	Produced Gas
Pilot Fuel Inlet Pressure	689 kPag | 100.0 psig
Instrument Actuation Medium	Electric / Pneumatic
Instrument Gas Minimum Pressure	483 kPag | 70 psig
Appliance Temperature Rating	-29°C to 40°C | -20°F to 104°F
Fuel Input Per Burner (HHV)	1.261 GJ/h | 1.195 MM Btuh
Number of Burners per Appliance	2
Max. Fuel Gas Burner Pressure	83 kPag | 12.0 psig
Min. Fuel Gas Burner Pressure	6.9 kPag | 1.0 psig
Pilot Burner Type	Intermittent / Continuous
Pilot Burner Fuel Input (HHV)	0.03 GJ/h | 0.03 MM Btuh
Pilot Fuel Gas Burner Pressure	48 kPag | 7.0 psig
Primary Main Power	120 VAC / 60 Hz | 15.0 amps
Electrical Area Class At Burner	Non-Hazardous
Electrical Area Class At Fuel Train	Zone 1
Electrical Area Class At Control Panel	Zone 2
Burner Management System	Prepackaged / CSA Certified.
Type of Flame Safeguard Control	Single Burner FSG
Primary Control Power	24 VDC | 4.0 amps

VENTING

1.1 Vent sweet fuel gas separately to a safe location outdoors, using vent line equal in size to the vent outlet connection of the respective device for the first 15 meters, then increase by one pipe size for every additional 15 meters in length.
1.2 When venting multiple devices to a common header the cross section of the header shall be equal or larger than a total of cross sections of all devices being vented through that header multiplied by 2.
1.3 The discharge of the vent line (vent header) shall be located not less than 3ft (1m) horizontally from any building opening that is below the level of such discharge, not beneath any building, and not less than 10ft (3m) in any direction from air openings into a direct vent appliance, a mechanical air intake, or a source of ignition.
1.4 An outdoor vent line termination or device vent outlet shall be equipped with a means to prevent the entry of water, insects or foreign material. When venting sour fuel gas, appropriate project / plant specific measures shall be taken under consideration to ensure safety.

PIPING

2.1 All fuel gas supply piping upstream and including the main manual shutoff valve HV101 shall be compliant with ASME B31.3 or CSA B149.1. All piping and equipment downstream of the main manual shutoff valve HV101 shall be compliant with CSA B149.3.
2.2 All piping, fittings and instrument tubing materials shall be as specified in the Bill of Materials for this project.
2.3 Piping upstream of PRV103 to be hydro tested to 375 psig per ABSA approved procedure or tested as per CSA B149.1. Piping downstream of PRV103 to be pneumatically soap tested with compressed air to 45 psig according to ENEFEN pneumatic test procedure.

UNIONS & FLANGES

3.1 Sufficient unions / flange connections shall be provided by the installer to allow tightening or disassembly of individual fuel train components and of the main and pilot burner without affecting other components. Locations are not shown on this drawing and are subject to the physical layout of fuel train, windbox, and the burner.

VALVES

4.1 Manual ball valves shall be installed with handle in open position pointing in the direction of flow.
4.2 HV207 and PI207 shall be mounted on burner windbox.

PRV DESIGN

5.1 A single regulator with internal relief design may be used in lieu of a PSV to protect downstream components from overpressure.

SWITCHES

6.1 PSLL and PSHH shall be mounted as close as practicable above fuel train so that they are easily accessible for calibration, are self-draining, and possibility of freezing is minimized.
6.2 Quarter-turn isolating ball valve shall be in L.O. (locked open) position. Instrument tubing union shall be installed between the valve and the switch, and switch wired using flex cable to allow partial removal for calibration.
6.3 LSLL shall be mounted so that the fire tube is totally immersed, with a minimum of 2 inches of liquid above its top tangent.

PROJECT NOTES

This document is subject to a Design Approval in Principle. The completed and working appliance is subject to a compulsory Field Inspection. Both steps must be dated and signed and sealed by a qualified professional engineer in fields provided.

INSTALLATION MAY REQUIRE LOCAL PERMITS

No part substitution allowed without written authorization from ENEFEN. In addition, the design and the installation of the appliance may be subject to other local gas safety regulations, permits, and Field Approvals. Field Approval and all permits are void if this appliance is altered or relocated.

REVISION	REVISION DESCRIPTION	DATE

INSPECTION BODY REQUIREMENTS USED AS BASIS FOR EVALUATION

- ISO/IEC 17020:2012 Requirements for the operation of inspection bodies
- SCC Requirements & Guidance - Inspection Body Accreditation Program: ASB_RG_IBAP_v0.1_2016-02-25
- Any of the following codes that are relevant to this installation:
  - CAN/CSA-B149.1-15 Natural gas and propane installation code
  - CAN/CSA-B149.2-15 Propane storage and handling code
  - CAN/CSA-B149.3-15 Code For The Field Approval Of Fuel-Related Components On Appliances and Equipment
  - CSA STD C22.1-15 Canadian Electrical Code, Part I Safety Standard for Electrical Installations
  - CAN/BNQ 1784-000 Canadian Hydrogen Installation Code
  - CSA B51-14 Boiler, pressure vessel and pressure piping code
  - Relevant requirements of the National Building Code of Canada and the National Fire Code of Canada

GAS APPLIANCE DESIGN APPROVED IN PRINCIPLE SUBJECT TO FIELD INSPECTION

APPROVED BY:
Jozef Jachniak, P. Eng.
APPROVED DATE:
08 Jan 2021
PERMIT TO PRACTICE
P08977

GAS APPLIANCE FIELD INSPECTION PASSED FIELD APPROVAL COMPLETE

APPROVED BY:
Jozef Jachniak, P. Eng.
APPROVED DATE:
08 Jan 2021
PERMIT TO PRACTICE
P08977

Under the authority given to Professional Engineers by Alberta Municipal Affairs as per the requirements of the Gas Code Regulation Variance VAR-GAS-03-19.

NWP INDUSTRIES INC.

Copyright © 2018
Drawing: NFN1805015-100
Design By: ENEFEN Engineering Ltd.
Drawn By: ENEFEN Engineering Ltd.

Birchill Canada Limited Partnership
Birchill HZ Brazr -
01-04-043-13-W5

PIPING & INSTRUMENTATION DIAGRAM (P&ID)

Line Heater

2.52 GJ/h | 2.39 MM Btuh

SIZE: B	NFN1805015-P100	REV: 0
SCALE: None	01/08/2021	SHEET 1 OF 1

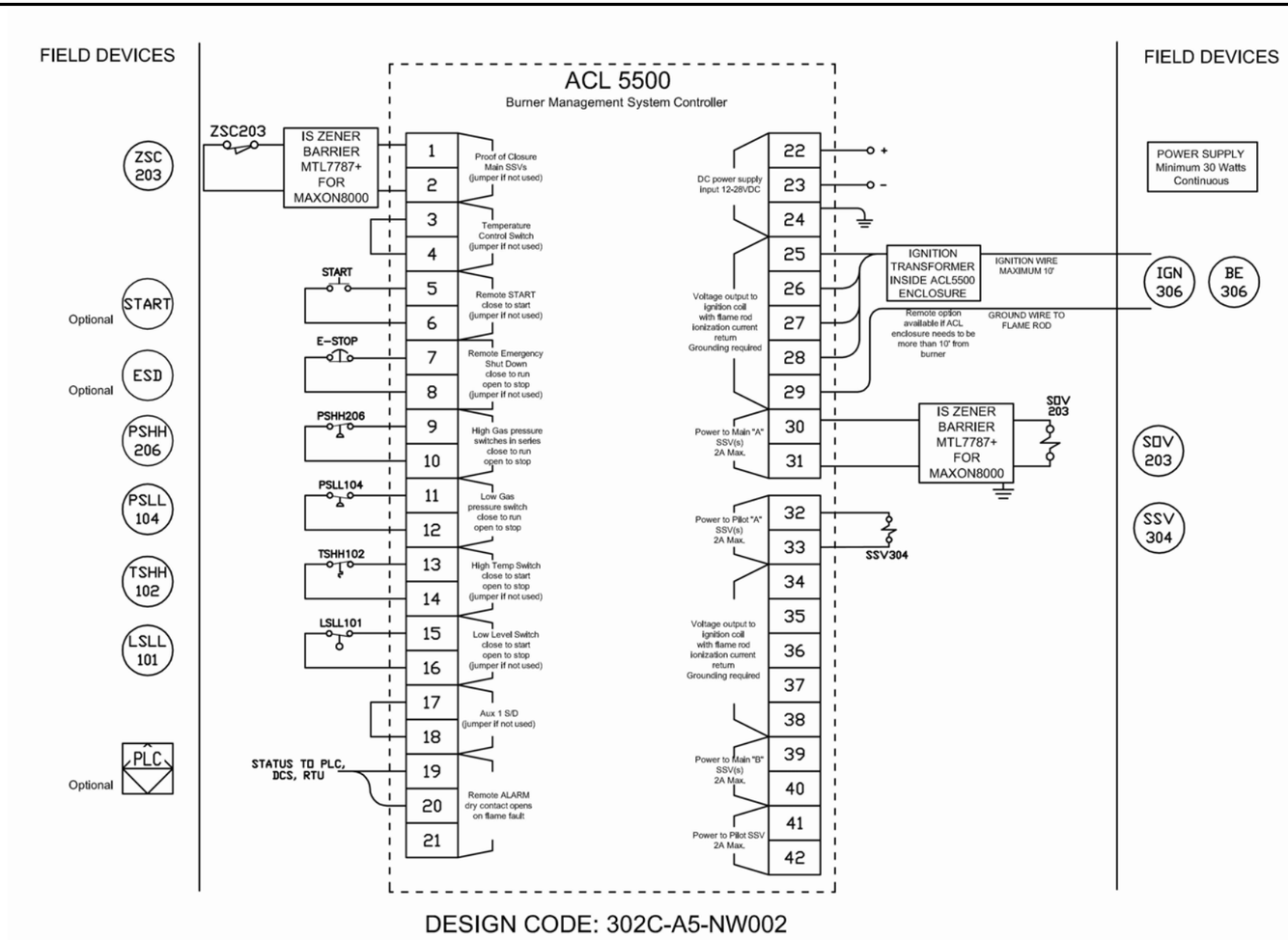

DESIGN CODE: 302C-A5-NW002

DESIGN SPECIFICATIONS

Owner Project Number	--
Owner Name	Birchill Canada Limited Partnership
Client Name	Dynamic Combustion
Plant / Branch	Birchill HZ Brazr
Area / Department	--
Map Location	01-04-043-13-W5
Appliance Function	Indirect Fired Gas Heating
Appliance Tag Number	--
Primary Main Power	120 VAC / 60 Hz | 15.0 amps
Electrical Area Class At Fuel Train	Zone 1
Electrical Area Class At Control Panel	Zone 2
Electrical Area Class At Burner	Non-Hazardous
Burner Management System	Prepackaged / CSA Certified.
Type of Flame Safeguard Control	Single Burner FSG
Primary Control Power	24 VDC | 4.0 amps

PROJECT NOTES

This document is subject to a Design Approval in Principle. The completed and working appliance is subject to a compulsory Field Inspection. Both steps must be dated and signed and sealed by a qualified professional engineer in fields provided.

INSTALLATION MAY REQUIRE LOCAL PERMITS

No part substitution allowed without written authorization from ENEFEN. In addition, the design and the installation of the appliance may be subject to other local gas safety regulations, permits, and Field Approvals. Field Approval and all permits are void if this appliance is altered or relocated.

REVISION	REVISION DESCRIPTION	DATE

NOTES

1. All electrical work shall be performed by qualified personnel.
2. All electrical materials and methods shall be appropriate for the specified environment and Electrical Classification Areas and in compliance with the CSA22.1 Canadian Electric Code. Wiring shall be 14Ga minimum, except for thermocouple wiring which may be 16Ga.
3. Electrical seals and wiring methods shall be installed as required by the CSA 22.1-12 Canadian Electrical Code.
4. PSLL and PSHH shall be mounted as close as practicable above fuel train so that they are easily accessible for calibration, are self-draining, and possibility of freezing is minimized. Quarter-turn isolating ball valve shall be in L.O. (locked open) position.
5. Instrument tubing union shall be installed between the valve and the switch, and switch wired using flex cable to allow partial removal for calibration.
6. Zener barriers can be used to install safety shut-off valves with a Class 1 Div 2 rating in a Class 1 Zone 1 area.

INSPECTION BODY REQUIREMENTS USED AS BASIS FOR EVALUATION

- ISO/IEC 17020:2012 Requirements for the operation of inspection bodies
- SCC Requirements & Guidance - Inspection Body Accreditation Program: ASB_RG_IBAP_v0.1_2016-02-25
- Any of the following codes that are relevant to this installation:
  - CAN/CSA-B149.1-15 Natural gas and propane installation code
  - CAN/CSA-B149.2-15 Propane storage and handling code
  - CAN/CSA-B149.3-15 Code For The Field Approval Of Fuel-Related Components On Appliances and Equipment
  - CSA STD C22.1-15 Canadian Electrical Code, Part I Safety Standard for Electrical Installations
  - CAN/BNQ 1784-000 Canadian Hydrogen Installation Code
  - CSA B51-14 Boiler, pressure vessel and pressure piping code
  - Relevant requirements of the National Building Code of Canada and the National Fire Code of Canada

GAS APPLIANCE DESIGN APPROVED IN PRINCIPLE SUBJECT TO FIELD INSPECTION

APPROVED BY:
Jozef Jachniak, P. Eng.
APPROVED DATE:
08 Jan 2021
PERMIT TO PRACTICE
P08977

GAS APPLIANCE FIELD INSPECTION PASSED FIELD APPROVAL COMPLETE

APPROVED BY:
Jozef Jachniak, P. Eng.
APPROVED DATE:
08 Jan 2021
PERMIT TO PRACTICE
P08977

Under the authority given to Professional Engineers by Alberta Municipal Affairs as per the requirements of the Gas Code Regulation Variance VAR-GAS-03-19.

NWP INDUSTRIES INC.

Copyright © 2018
Drawing: NFN1805015-200
Design By: ENEFEN Engineering Ltd.
Drawn By: ENEFEN Engineering Ltd.

Birchill Canada Limited Partnership
Birchill HZ Brazr -
01-04-043-13-W5

SYSTEM WIRING DIAGRAM

Line Heater

2.52 GJ/h | 2.39 MM Btuh

SIZE: B	NFN1805015-E200	REV: 0
SCALE: None	01/08/2021	SHEET 1 OF 1