ITEM	SERVICE	MAWP	CODE	INLET	OUTLET	V/D/TEMP	DIM B	DIM C	LOUVERS	BUG SCREEN	DRIVE	FAN	FINISH
1	AC 1.8 CU.FT.	1650 PSI @ 350/-20º F	ASME	3"-900 RFWN	3"-900 RFWN	(1) 1"-6000#	31.125	35.875	MAN	YES (SOFT)	DIRECT DRIVE BY AXH (1) 5HP, 900RPM, 460/60/3, VFD COMP, TEFC, CSA, ELECTRIC MOTOR	(1) 42" Ø MOORE-S16, SD, SC, 1K, 4- BLADE 34.5º PA. LH ROTATION 870 RPM @ 4 HP REQ'D Ø1.625" BORE WITH .375 x .1875 KWY.	STRUCTURE STD. PRIMER w/WARM GRAY ENAMEL TOP COAT FAN GUARD/BUG SCREEN/DISCHARGE GUARD GALVANIZED

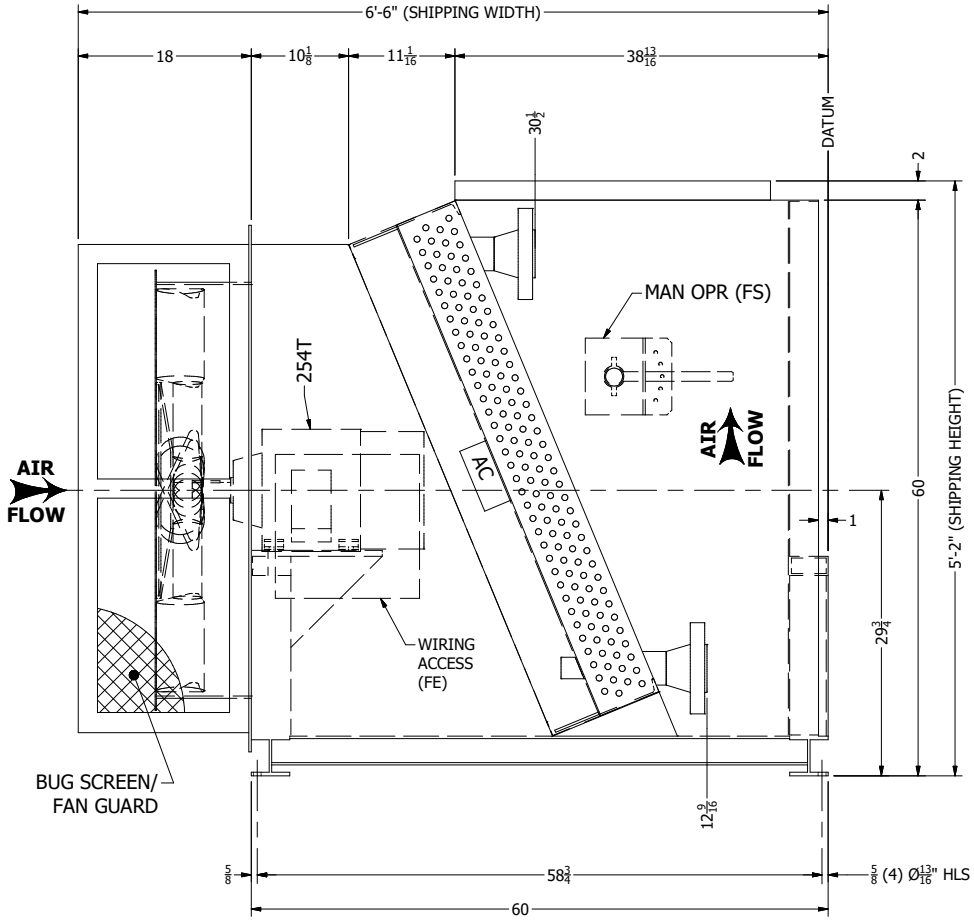

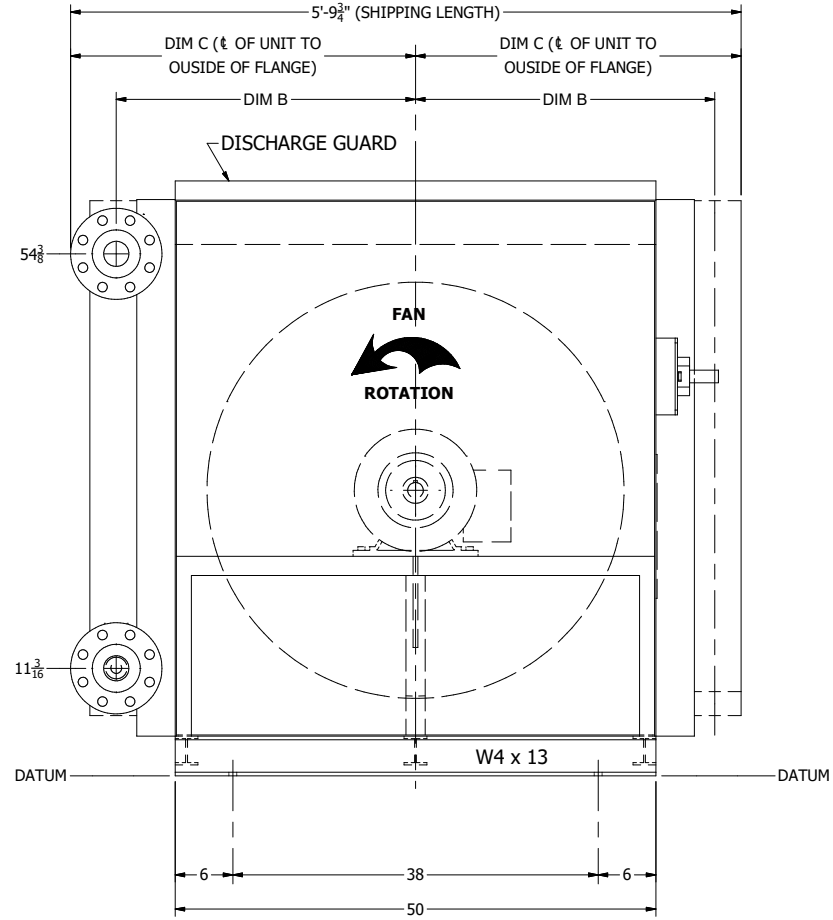

APPROVAL PRINT

- ☐ APPROVED WITHOUT CHANGE
- ☐ APPROVED AS NOTED
- ☐ RESUBMIT FOR APPROVAL
- ☐ SIGNED:_____
- ☐ DATED:_____

REV	DESCRIPTION	BY	CK	DATE

FOR: GAS DRIVE GLOBAL	ESTIMATED DRY WEIGHT 2950 #
P.O. #: 4500393237	AXH air-coolers
CUST. TAG #: E002562-01	CERTIFIED DRAWING FOR:
USER: YOHO RESOURCES	MODEL 42EF — QUANTITY: 1
JOBSITE: ALBERTA, CANADA	SIZE — DWG NO 174962-CRT — REV 0
JOB #: 174962	
DR: J Kenney — DATE: 10/9/2017	
CK: J Shepherd — DATE: 10/10/2017	SCALE FULL — DATE 10/9/2017 — SHEET 1 OF 1