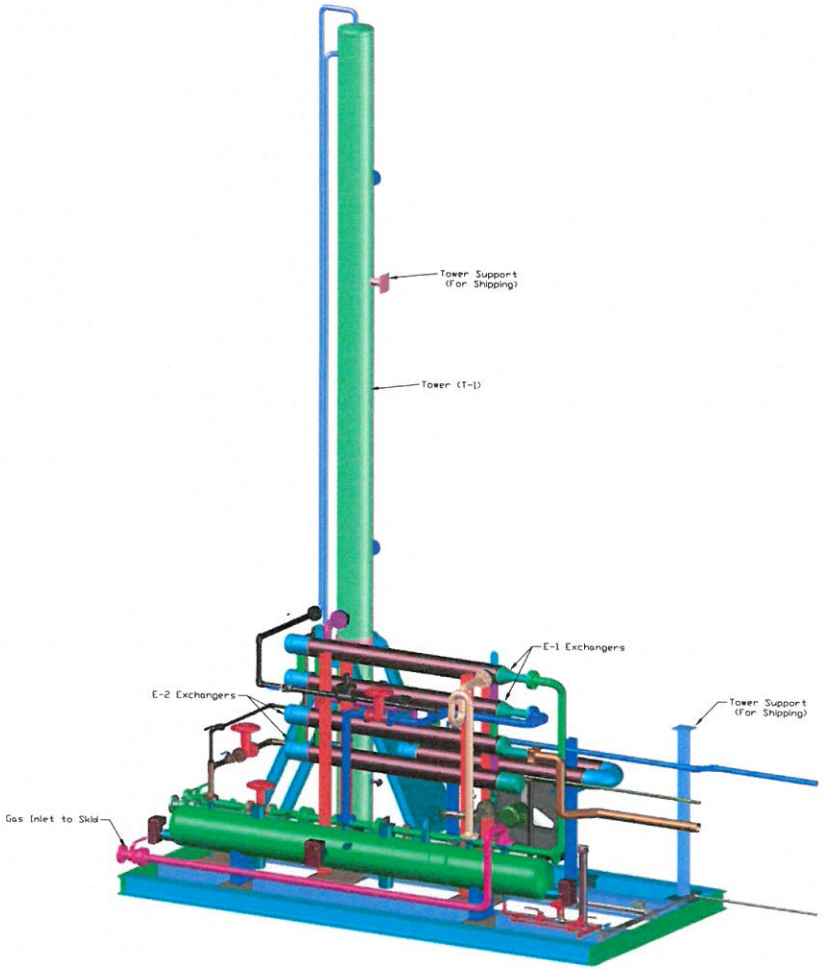

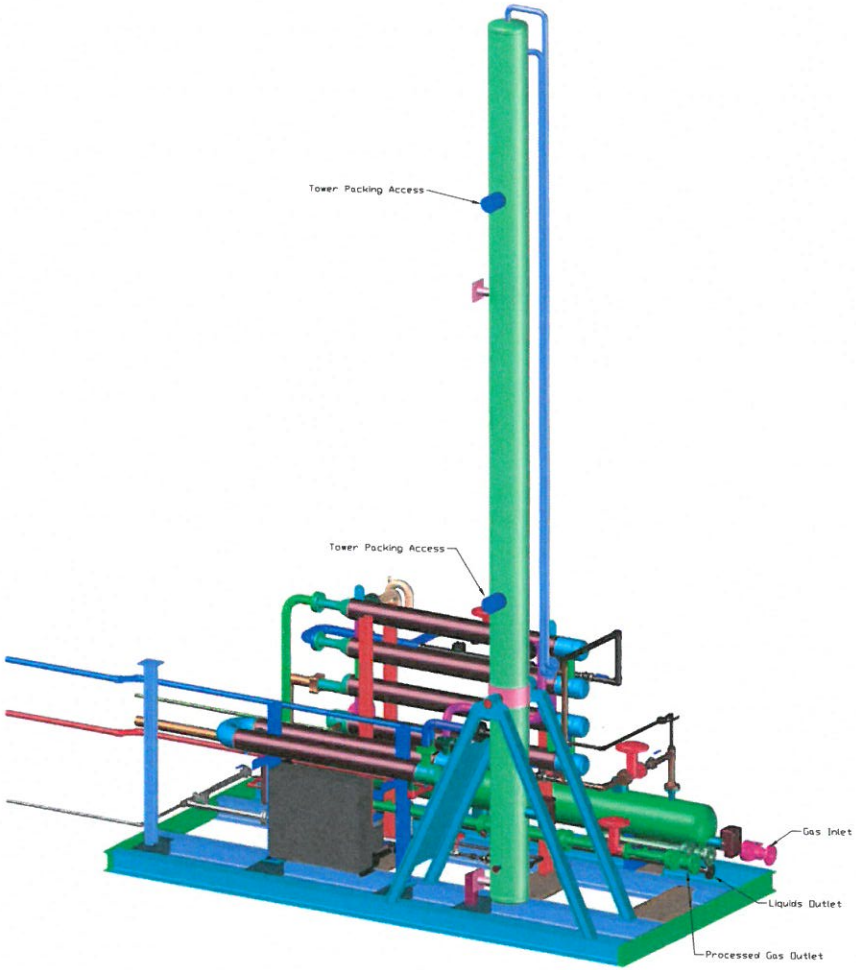

ISO

Notes:
1. Schematic layout for review only.
2. All dimensions approximate.
3. Equipment based on best information available. Subject to change.
4. Skid layout and orientation subject to change.

REV.	DESCRIPTION	DATE
0	For Approval	12/15/14

Glycol Specialist
Recapture Solutions, LLC
1-3 MCFD Gas / Liquids Plant

CSI Job #2054
CMWS Job #1419

DR. BY: TC CH'D BY: JH

TITLE: Process Plant Skid General Layout

DATE: 12/15/14 SCALE: 1/4"=1' SHEET: 1 of

DWG. NO. 1419-30-GA-11 REV. 0

CREATIVE MECHANICAL & WELDING SERVICES, INC.
7803 MILLER DR. FREDERICK, CO 80504
303-776-9741 FAX 303-776-2057

THIS DRAWING IN ALL PARTICULARS IS OUR PROPERTY. ALL RIGHTS OF DESIGN, INVENTION OR USE ARE RESERVED.

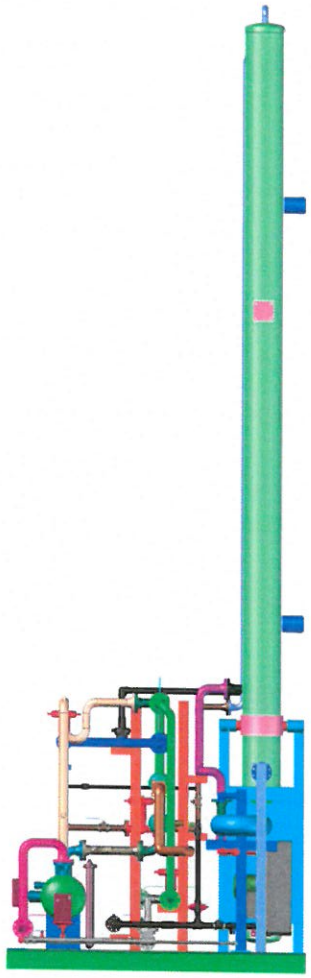

Left End View

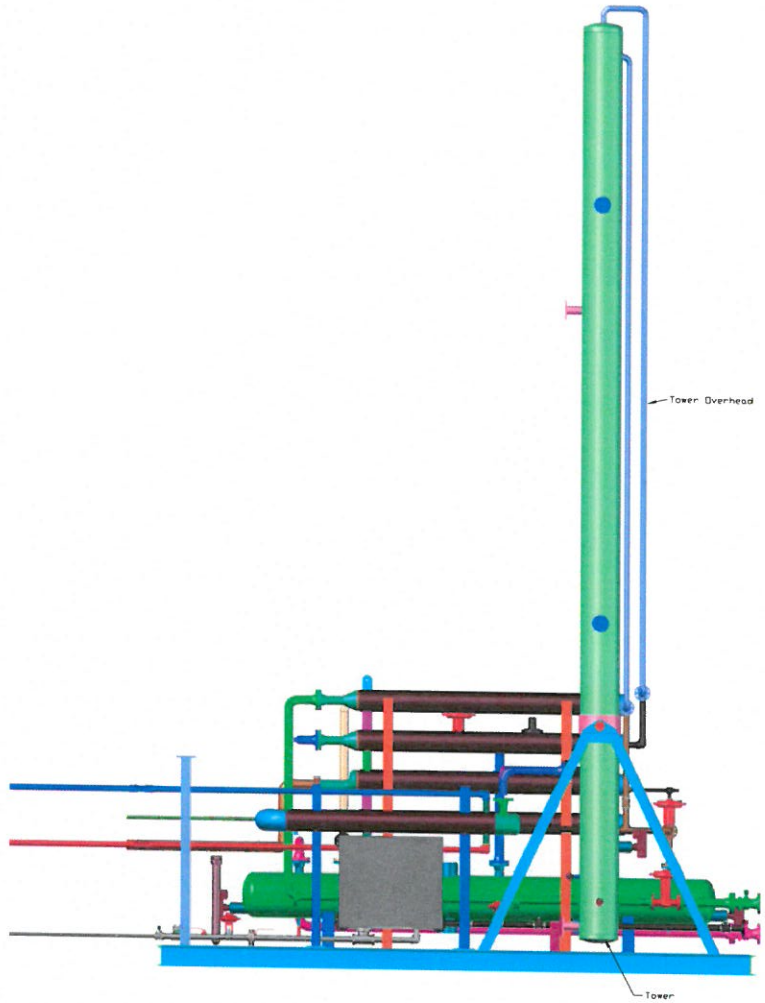

Front View

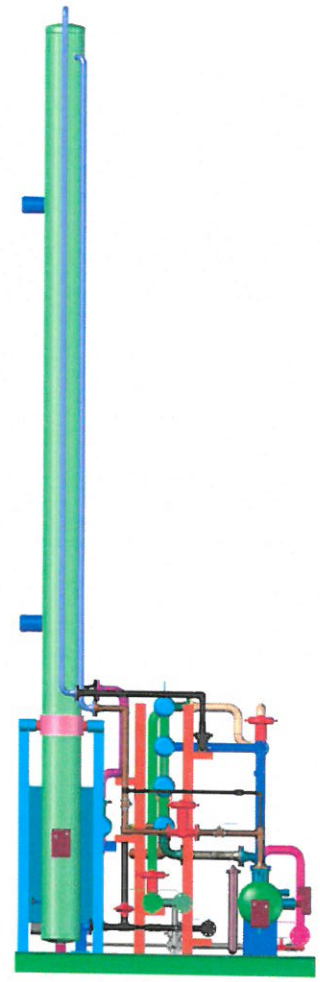

Right End View

Notes:
1. Drawing layout for review only.
2. All dimensions approximate.
3. Equipment based on best information available. Subject to change.
4. Skid layout and orientation subject to change.

REV.	DESCRIPTION	DATE
0	For Approval	12/15/14

Glycol Specialist
Recapture Solutions, LLC
1-3 MCFD Gas / Liquids Plant

GSI Job #2054
CMWS Job #1419

DR. BY: TC CH'D BY: JH

TITLE: Process Plant Skid General Layout

DATE: 12/15/14 SCALE: 1/4"=1' SHEET: 2 of

DWG. NO. 1419-30-GA-11 REV. 0

CREATIVE MECHANICAL & WELDING SERVICES, INC.
7603 MILLER DR. FREDERICK, CO 80504
303-776-9741 FAX 303-776-2057

THIS DRAWING IN ALL PARTICULARS IS OUR PROPERTY. ALL RIGHTS OF DESIGN, INVENTION OR USE ARE RESERVED.

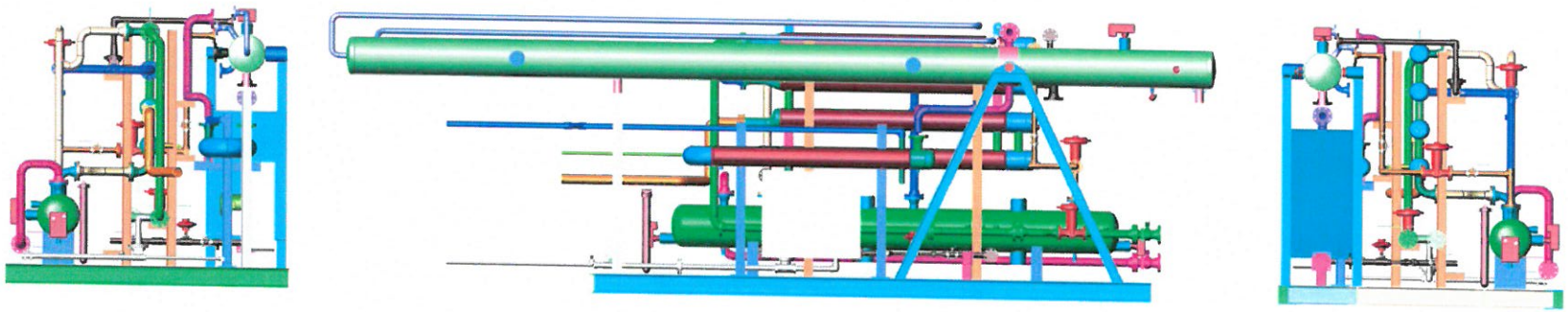

Elevation w/ Tower
in Shipping Position

Notes:
1. Drawing layout for review only.
2. All dimensions approximate.
3. Equipment based on best information available. Subject to change.
4. Skid layout and orientation subject to change.

REV.	DESCRIPTION	DATE
0	For Approval	12/15/14

Glycol Specialist
Recapture Solutions, LLC
1-3 MCFD Gas / Liquids Plant

GSI Job #2054
CMWS Job #1419

DR. BY: TC CH'D BY: JH

TITLE: Process Plant Skid General Layout

DATE: 12/15/14 SCALE: 1/4"=1' SHEET: 3 of 4

DWG. NO. 1419-30-GA-11 REV. 0

CREATIVE MECHANICAL & WELDING SERVICES, INC.
7603 MILLER DR. FREDERICK, CO 80504
303-776-9741 FAX 303-776-2057

THIS DRAWING IN ALL PARTICULARS IS OUR PROPERTY. ALL RIGHTS OF DESIGN, INVENTION OR USE ARE RESERVED.

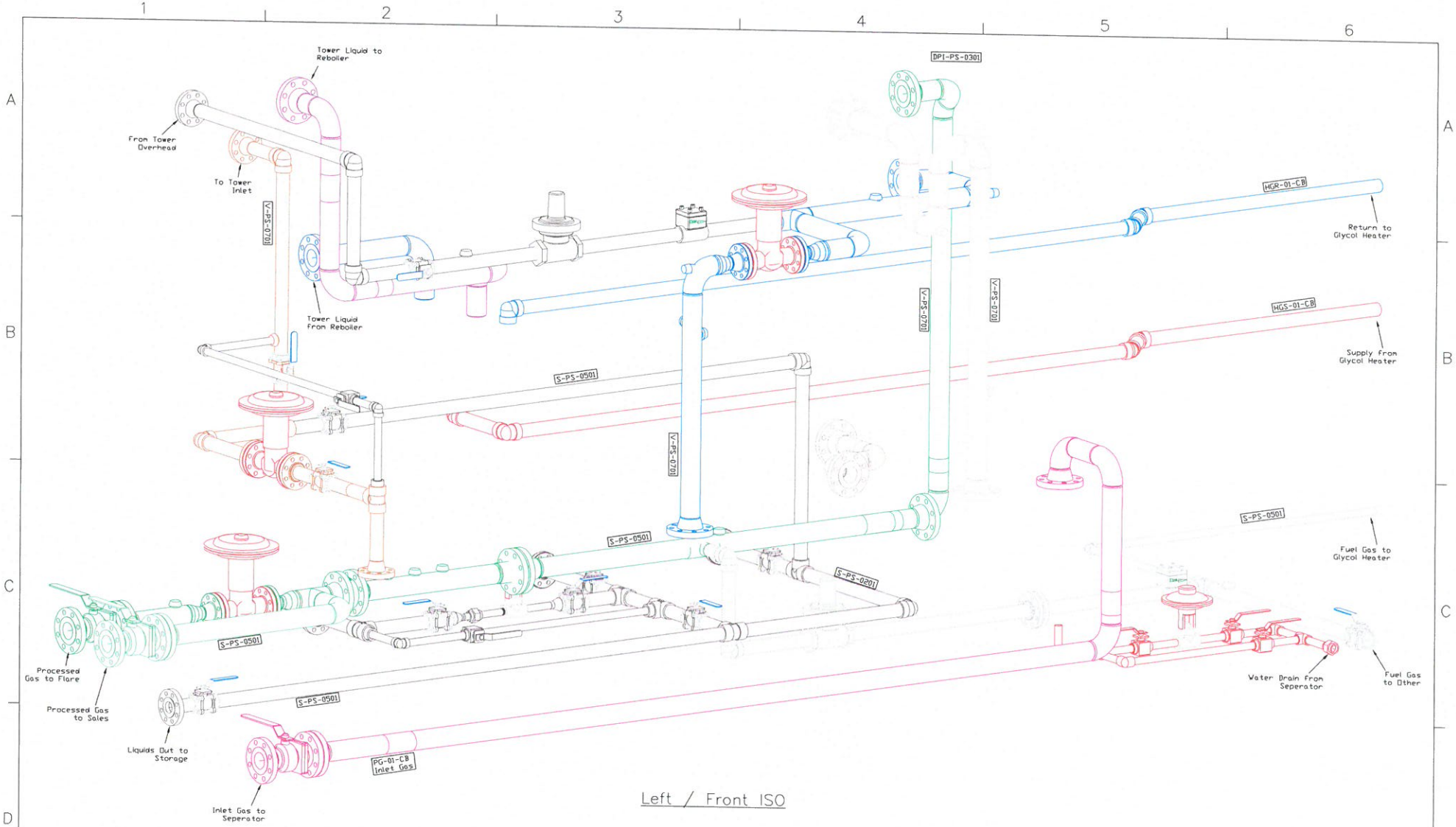

Left / Front ISO

REV.	DESCRIPTION	DATE
1	For Construction	12/31/14
0	For Review	12/27/14

Glycol Specialist
Recapture Solutions, LLC
1-3 MCFD Gas / Liquids Plant
GSI Job #2054
CMWS Job #1419

DR. BY: TC CH'D BY: JH

TITLE: General Piping Layout

DATE: 12/31/14 SCALE: None SHEET: 1 of

DWG. NO. 1419-41-SD-50 REV. 1

CREATIVE MECHANICAL & WELDING SERVICES, INC.
7603 MILLER DR. FREDERICK, CO 80504
303-776-9741 FAX 303-776-2057

THIS DRAWING IN ALL PARTICULARS IS OUR PROPERTY. ALL RIGHTS OF DESIGN, INVENTION OR USE ARE RESERVED.

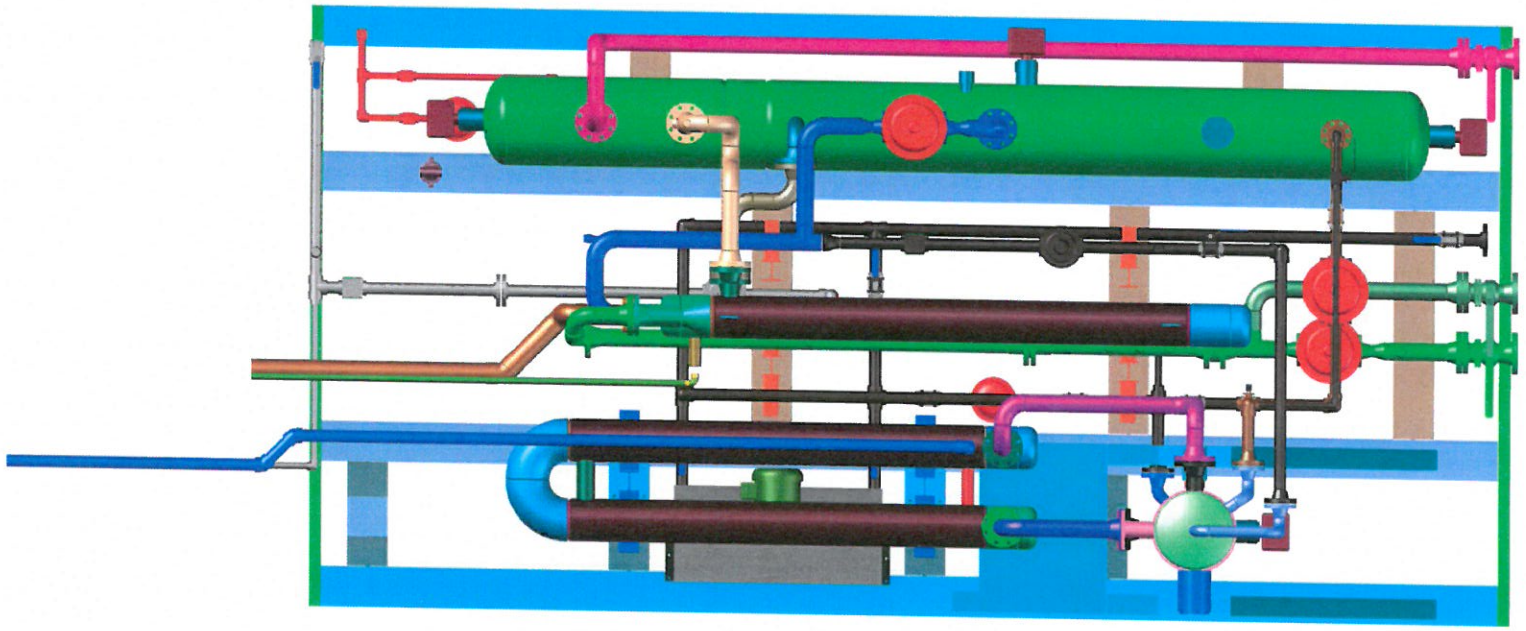

Plan

Notes:
1. Schematic layout for review only.
2. All dimensions approximate.
3. Equipment based on best information available. Subject to change.
4. Skid layout and orientation subject to change.

REV.	DESCRIPTION	DATE
0	For Approval	12/15/14

Glycol Specialist
Recapture Solutions, LLC
1-3 MCFD Gas / Liquids Plant

GSI Job #2054
CMWS Job #1419

DR. BY: TC
CH'D BY: JH

TITLE: Process Plant Skid General Layout

DATE: 12/15/14
SCALE: 1/4"=1'
SHEET: 4 of 4

CREATIVE MECHANICAL & WELDING SERVICES, INC.
7603 MILLER DR. FREDERICK, CO 80504
303-776-9741 FAX 303-776-2057

DWG. NO. 1419-30-GA-11
REV. 0

THIS DRAWING IN ALL PARTICULARS IS OUR PROPERTY. ALL RIGHTS OF DESIGN, INVENTION OR USE ARE RESERVED.

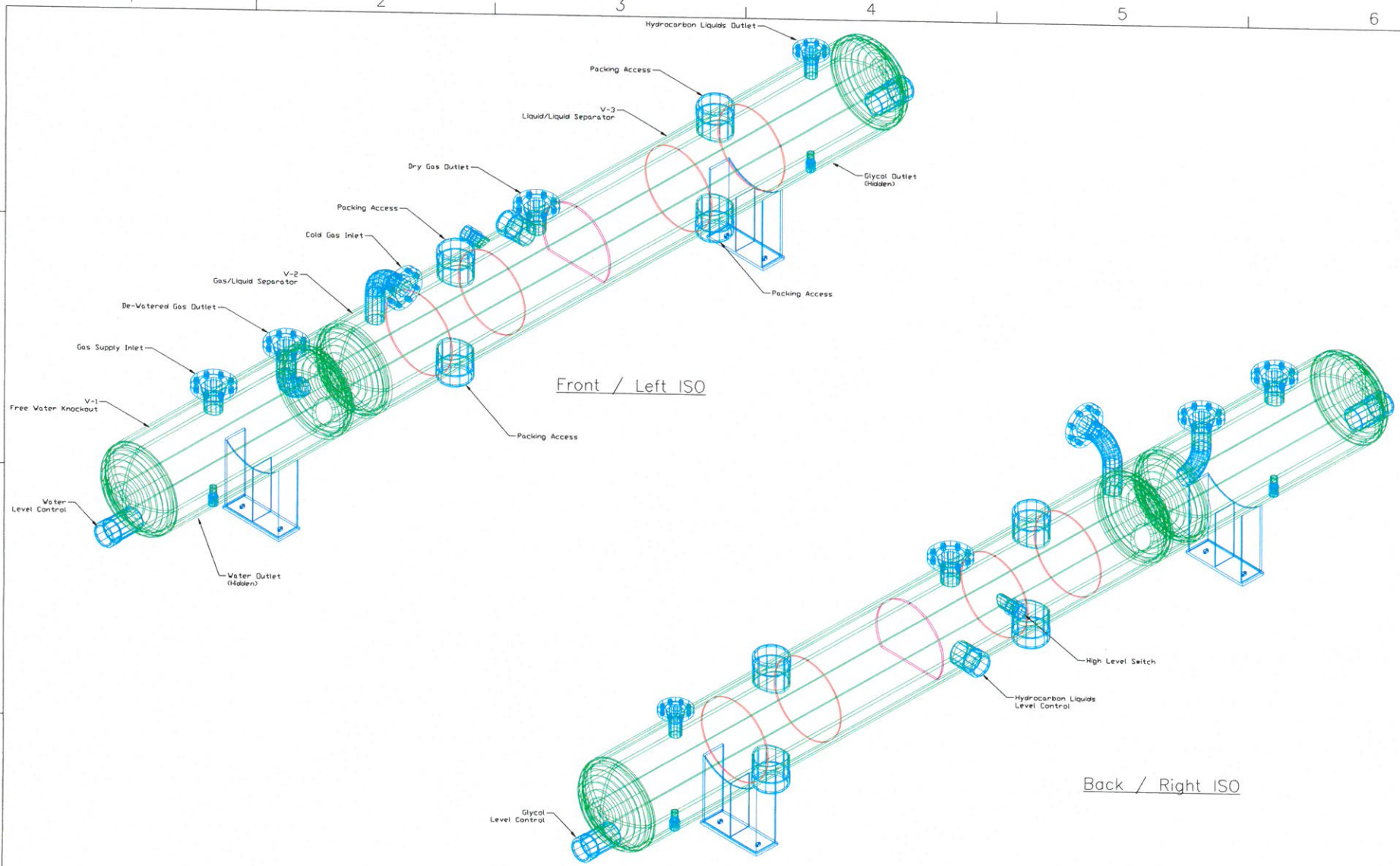

C:\Users\Public\Documents\CMWS Project Files\GSI- 1419- 1-3MM Plant\Drawings\1419_V_1-2-3_Rev 1.dwg, 1419-34-GA-11, 12/2/2014 5:39:54 PM

REV.	DESCRIPTION	DATE
1	Add code stamp info, remove glycol coil	12/01/14
0	For Review	10/13/14

Glycol Specialists, Inc.
Recapture Solutions, LLC
1-3 mcfd MRU/Stabilizer Skid
GSI Job #2054
CMWS Job #1419

DR. BY: TC CH'D BY: JH

TITLE: V-1,2,3 Free Water Knockout, Gas/Liquid Separator, Liquid/Liquid Separator Overall Layout

DATE: 12/01/14 SCALE: NA SHEET: 1 of 1

CREATIVE MECHANICAL & WELDING SERVICES, INC.
7803 MILLER DR. FREDERICK, CO 80504
303-776-9741 FAX 303-776-2057

DWG. NO. 1419-34-GA-11 REV. 1

THIS DRAWING IN ALL PARTICULARS IS OUR PROPERTY. ALL RIGHTS OF DESIGN, INVENTION OR USE ARE RESERVED.

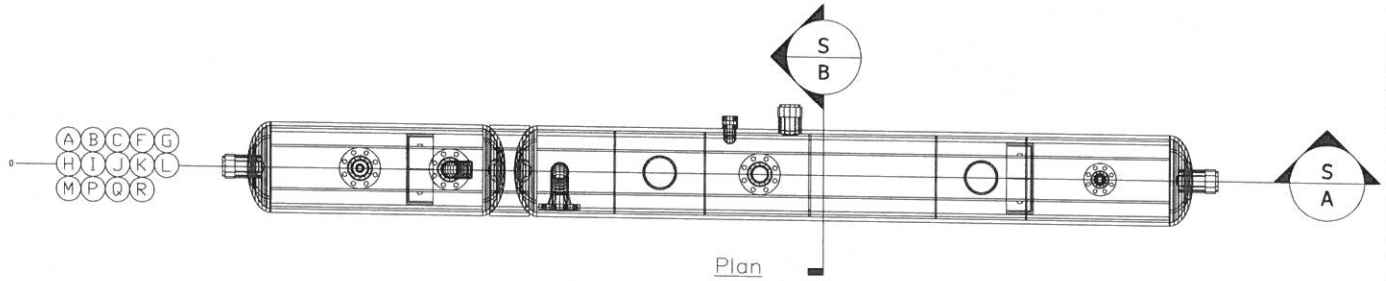

Plan

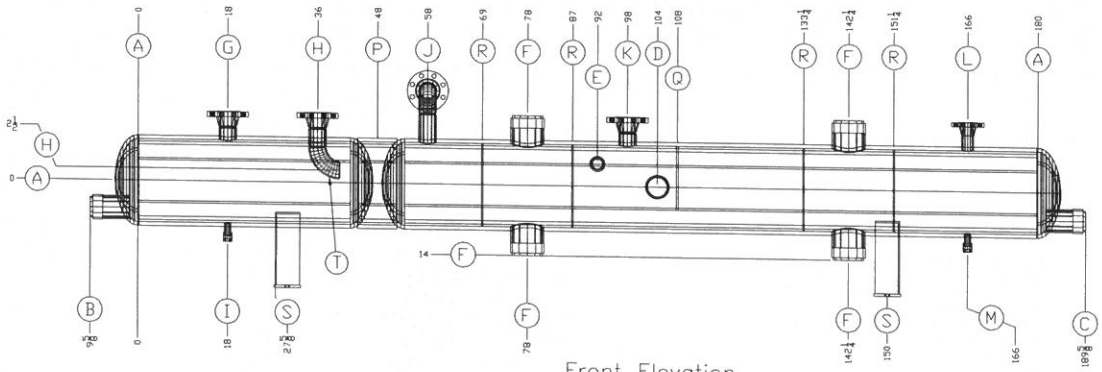

Front Elevation

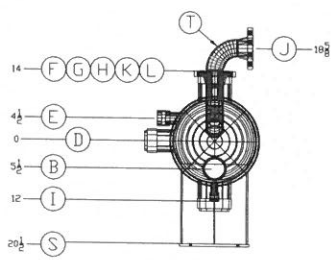

Left Elevation

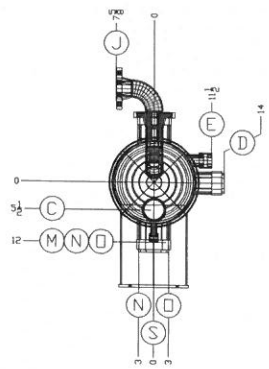

Right Elevation

Component Schedule

Item	Desc.	Size	Type
A	V-1,2,3 Shell	18"	--, CS
B	Water Level Control	4"	WellMark Fitting
C	Glycol Level Control	4"	WellMark Fitting
D	Hydrocarbon Liquid Level Control	4"	WellMark Fitting
E	High Level Switch	2"	3000# Thd Cplg
F	Packing Access	6"	WellMark Fitting
G	Gas Supply Inlet	3"	300# RFWN
H	De-Watered Gas Outlet	3"	300# RFWN
I	Water Outlet	1"	3000# Thd Cplg
J	Cold Gas Inlet	3"	300# RFWN
K	Dry Gas Outlet	3"	300# RFWN
L	Hydrocarbon Liquids Outlet	2"	300#, RFWN
M	Glycol Outlet	1"	3000# Thd Cplg
N	Not Used		
O	Not Used		
P	V1-V2 Divider	--	--
Q	V2-V3 Divider	--	--
R	Packing Support	--	Expanded Metal
S	Legs	--	CS
T	Elbow, 90° LRBW	3"	CS

DESIGN DATA

DESIGN CODE: ASME SECT. VIII DIV. 1 2013 EDITION		MATERIAL SPEC:	
MAWP: 750 PSI @ 150 °F		MDMT: -40 °F @ 150 PSI	
INTERNAL DESIGN: — PSI @ — °F		NORMAL OPERATING: — PSI @ — °F	
EXTERNAL DESIGN: — PSI @ — °F			
IMPACT TEST EXEMPTION: UCS-66(b)		PWHT: —	HOURS @ — °F
SHOP HYDROTEST PRESSURE: 945 PSI		FIELD HYDROTEST PRESSURE:	PSI
SHELL CA: 0.0"	NOZZLES CA: 0.0"	HEADS CA: 0.0	INTERNALS CA:
LONG X-RAY: —	JE: 70	GIRTH X-RAY: —	JE: 70
HDD: —			

1. NOZZLE BOLT HOLES SHALL STRADDLE NORMAL VESSEL CLS.
2. DRILL 1/4" TELLTALE HOLE IN EACH REINFORCING PAD SEGMENT
3. NOZZLE PROJECTION ARE MEASURED FROM CL OF VESSEL TO FACE OF FLANGE.

NO	REVISIONS	BY	CHK BY
	FOR APPROVAL		

APPROVED FOR CONSTRUCTION:

A.I.: _____ DATE: ___

ENG: _____ DATE: ___

REV.	DESCRIPTION	DATE
1	Add code stamp info, remove glycol coil	12/01/14
0	For Review	10/13/14

Glycol Specialists, Inc.
Recapture Solutions, LLC
1-3 mcfd MRU/Stabilizer Skid
GSI Job #2054
CMWS Job #1419

DR. BY: TC CH'D BY: JH

TITLE: V-1,2,3 Free Water Knockout, Gas/Liquid Separator, Liquid/Liquid Separator Overall Layout

DATE: 12/01/14 SCALE: 1/2"=1" SHEET: 1 of 2

CREATIVE MECHANICAL & WELDING SERVICES, INC.
7603 MILLER DR. FREDERICK, CO 80504
303-776-9741 FAX 303-776-2057

DWG. NO. 1419-44-SD-31 REV. 1

THIS DRAWING IN ALL PARTICULARS IS OUR PROPERTY. ALL RIGHTS OF DESIGN, INVENTION OR USE ARE RESERVED.

C:\Users\Public\Documents\CMWS Project Files\GSI- 1419- 1-3MM Plant\Drawings\1419_V_1-2-3_Rev 1.dwg, 1419-44-SD-31 (1), 12/3/2014 5:59:37 PM

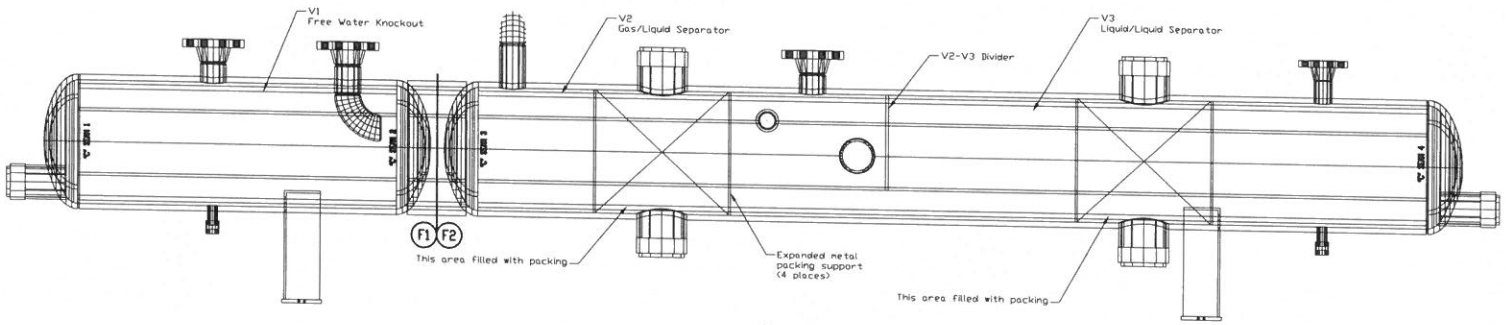

Section A

LONG/ROUND SEAM WELD

C1 C2 C3 C4

TYPICAL CPLG/ WELLMARK WELD DETAIL

B C D E F I L M N O

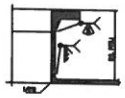

WELDNECK NOZZLE WELD DETAIL

G H J K

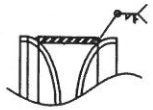

FILLET DETAIL

F1 F2

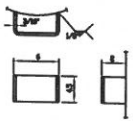

NAMEPLATE BRACKET

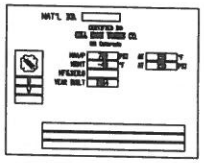

NAMEPLATE

NTS

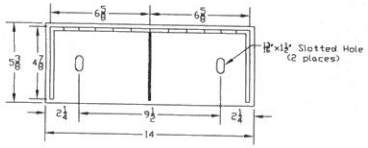

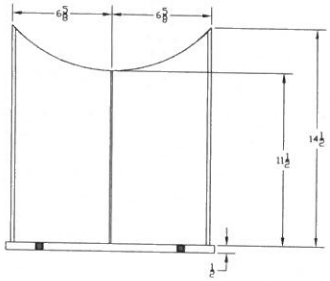

Leg Detail

(Scale: $1\frac{1}{2}$"=1')

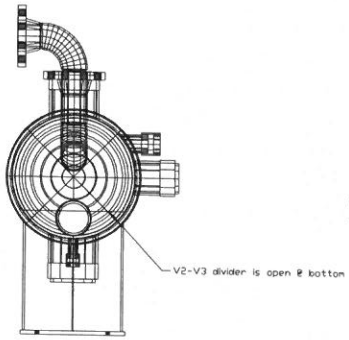

Section B

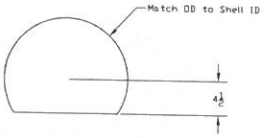

V2-V3 Divider

DESIGN DATA

DESIGN CODE: ASME SECT. VIII DIV. 1 2013 EDITION		NATIONAL BOARD NO:	
MAWP: 700 PSI @ 150 °F		MDMT: -40 °F @ 150 PSI	
INTERNAL DESIGN: — PSI @ — °F		NORMAL OPERATING: — PSI @ — °F	
EXTERNAL DESIGN: — PSI @ — °F			
IMPACT TEST EXEMPTION: UCS-66(b)		PWHT: —	HOURS @ — °F
SHOP HYDROTEST PRESSURE: 945 PSI		FIELD HYDROTEST PRESSURE:	PSI
SHELL CA: 0.07"	NOZZLES CA: 0.0"	HEADS CA: 0.00	INTERNALS CA:
LONG X-RAY: —	JC: 70	GIRTH X-RAY: —	JC: 70
NDE: —			

1. NOZZLE BOLT HOLES SHALL STRADDLE NORMAL VESSEL C.L.S.
2. DRILL 1/4" TELLTALE HOLE IN EACH REINFORCING PAD SEGMENT
3. NOZZLE PROJECTION ARE MEASURED FROM OD OF VESSEL TO FACE OF FLANGE.

NO	REVISIONS	BY	CHK BY
	FOR APPROVAL		

APPROVED FOR CONSTRUCTION:

A.I.: _____ DATE: ___

ENG: _____ DATE: ___

REV.	DESCRIPTION	DATE
1	Add code stamp info, remove glycol coil	12/01/14
0	For Review	10/13/14

Glycol Specialists, Inc.
Recapture Solutions, LLC
1-3 mcfd MRU/Stabilizer Skid
GSI Job #2054
CMWS Job #1419

DR. BY: TC CH'D BY: JH

TITLE: V-1,2,3 Free Water Knockout, Gas/Liquid Separator, Liquid/Liquid Separator Overall Layout

DATE: 12/01/14 SCALE: 3/4"=1' SHEET: 2 of 2

DWG. NO. 1419-44-SD-31 REV. 1

CREATIVE MECHANICAL & WELDING SERVICES, INC.
7603 MILLER DR. FREDERICK, CO 80504
303-776-9741 FAX 303-776-2057

THIS DRAWING IN ALL PARTICULARS IS OUR PROPERTY. ALL RIGHTS OF DESIGN, INVENTION OR USE ARE RESERVED.

C:\Users\Public\Documents\CMWS Project Files\GSI- 1419- 1-3MM Plant\Drawings\1419_V_1-2-3_Rev 1.dwg, 1419-44-SD-31 (2), 12/3/2014 6:00:17 PM

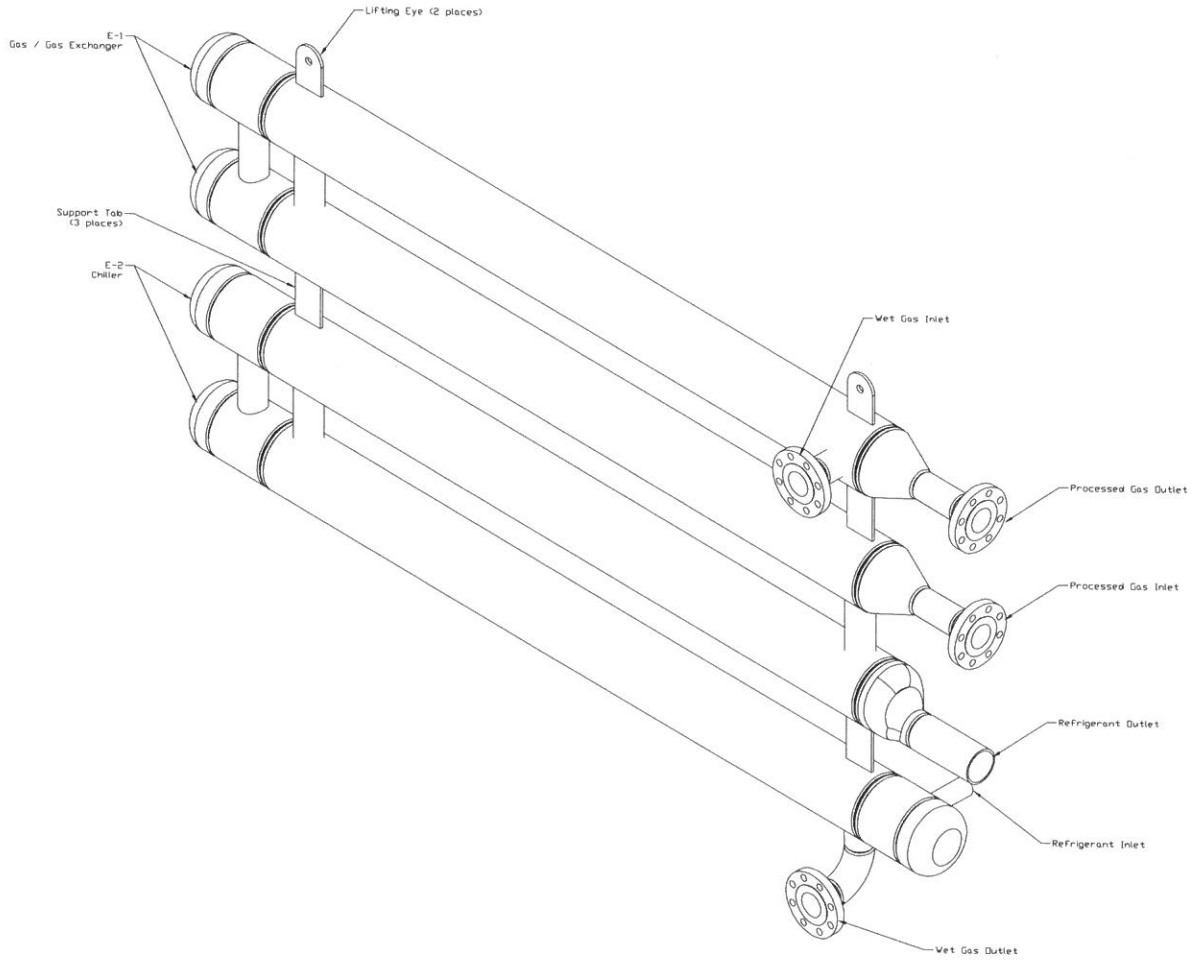

Back / Right ISO

REV.	DESCRIPTION	DATE
2	Approved for Fabrication	12/01/14
1	Revised For Review	10/13/14
0	For Review	10/09/14

Glycol Specialists, Inc.
Recapture Solutions, LLC
1-3 MMcfd MRU/Stabilizer Skid

GSI Job #2054
CMWS Job #1419

DR. BY: TC CH'D BY: JH

TITLE:
E-1,2 Gas/Gas Heat Exchanger
Chiller
General Arrangement

DATE: 12/01/14 SCALE: NA SHEET: 1 of 1

CREATIVE MECHANICAL & WELDING SERVICES, INC.
7603 MILLER DR. FREDERICK, CO 80504
303-776-9741 FAX 303-776-2057

DWG. NO. 1419-36-GA-11 REV. 2

THIS DRAWING IN ALL PARTICULARS IS OUR PROPERTY. ALL RIGHTS OF DESIGN, INVENTION OR USE ARE RESERVED.

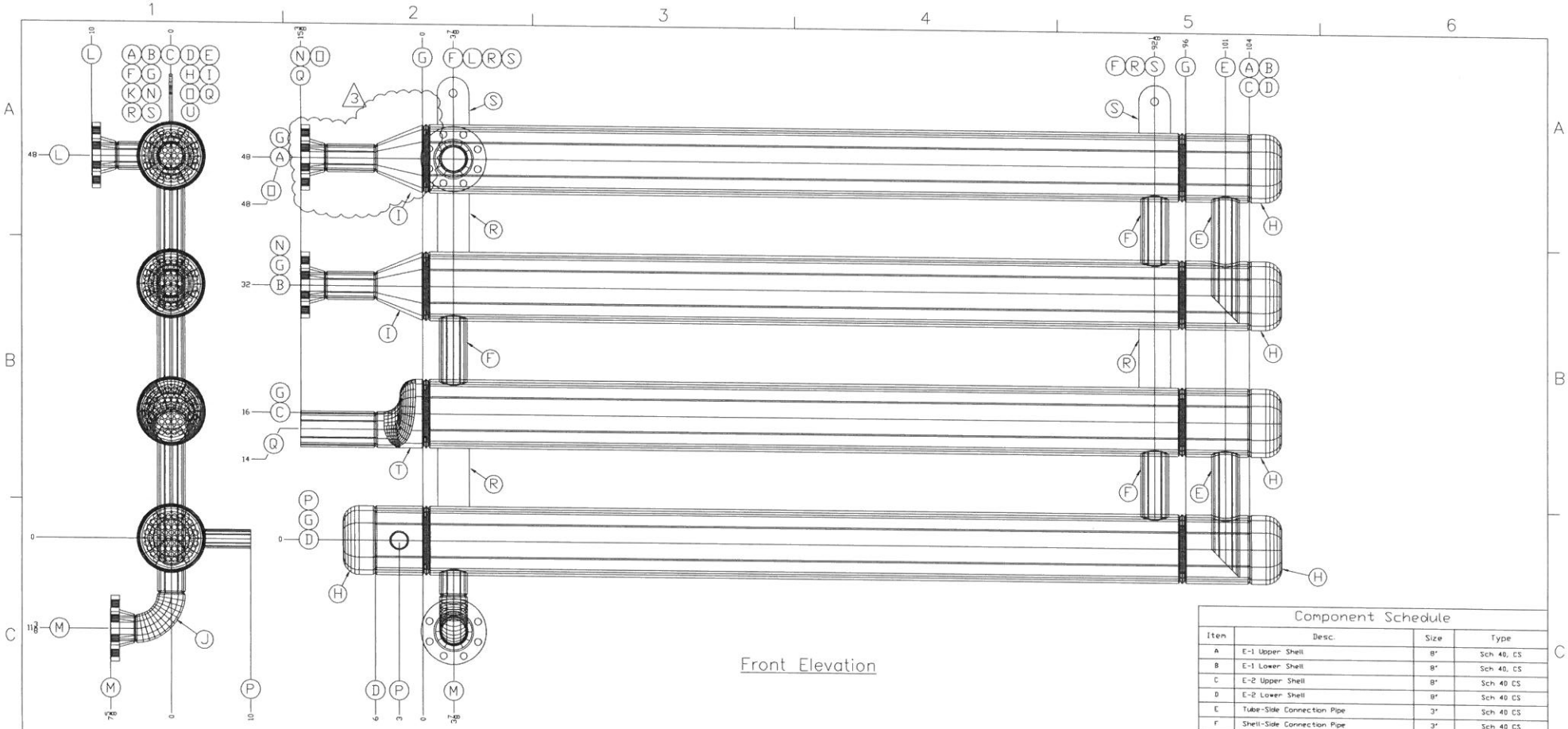

Component Schedule

Item	Desc.	Size	Type
A	E-1 Upper Shell	8"	Sch 40, CS
B	E-1 Lower Shell	8"	Sch 40, CS
C	E-2 Upper Shell	8"	Sch 40 CS
D	E-2 Lower Shell	8"	Sch 40 CS
E	Tube-Side Connection Pipe	3"	Sch 40 CS
F	Shell-Side Connection Pipe	3"	Sch 40 CS
G	Tube Sheet	8.625"	3/8" Thick, CS
H	Shell Cap, BW	8"	Sch 40 CS
I	Concentric Reducer, BW	8x3"	Sch 40 CS
J	90° Elbow, LRBW	3"	Sch 40 CS
K	Eccentric Reducer, BW	8x3"	Sch 40 CS
L	Wet Gas Inlet	3"	300#, RFWN
M	Wet Gas Outlet	3"	300# RFWN
N	Processed Gas Inlet	3"	300# RFWN
O	Processed Gas Outlet	3"	300# RFWN
P	Refrigerant Inlet	2"	Sch 40 CS
Q	Refrigerant Outlet	4"	Sch 40 CS
R	Support Clips	4"x3/8"	Flat Strap, CS
S	Lifting Eyes	4"x3/8"	Flat Strap, CS
T	Eccentric Reducer, BW	8x4"	Sch 40 CS

REV	DESCRIPTION	DATE
3	Change Reducer to Concentric, For Fabrication	12/05/14
2	Approved for Fabrication	12/01/14
1	Revised For Review	10/13/14
0	For Review	10/09/14

Glycol Specialists, Inc.
Recapture Solutions, LLC
1-3 MMcfd MRU/Stabilizer Skid

GSI Job #2054
CMWS Job #1419

DR. BY: TC CH'D BY: JH

TITLE: E-1,2 Gas/Gas Heat Exchanger Chiller General Arrangement

DATE: 12/01/14 SCALE: 1"=1' SHEET: 1 of 2

CREATIVE MECHANICAL & WELDING SERVICES, INC.
7803 MILLER DR. FREDERICK, CO 80504
303-776-9741 FAX 303-776-2057

DWG. NO. 1419-46-SD-31 REV. 3

THIS DRAWING IN ALL PARTICULARS IS OUR PROPERTY. ALL RIGHTS OF DESIGN, INVENTION OR USE ARE RESERVED.

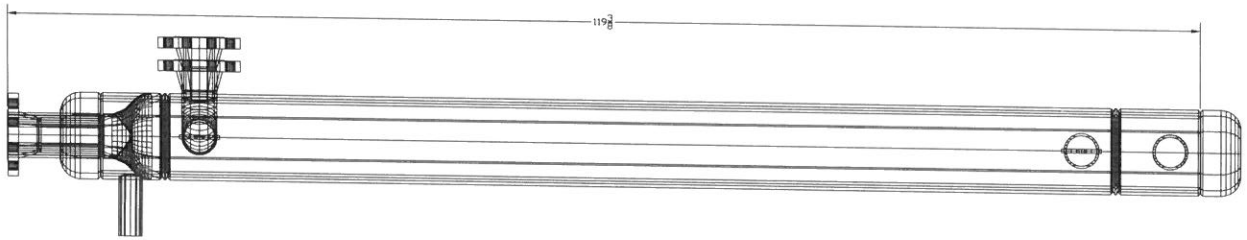

Plan

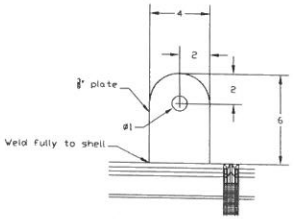

Lifting Eye Detail
2 Places

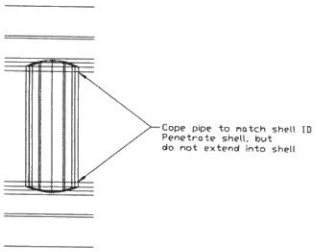

Shell-Side Connection
Pipe Detail
3 Places

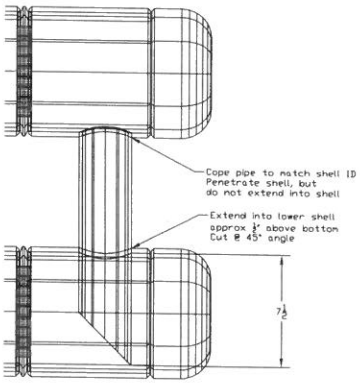

Tube-Side Connection Pipe Detail
2 Places

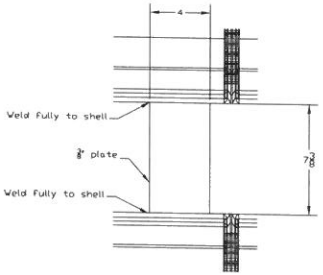

Support Clip Detail
3 Places

APPROVED FOR CONSTRUCTION:

A.I.: _____ DATE: ___
ENG: _____ DATE: ___

DESIGN DATA

DESIGN CODE: ASME SECT. VIII DIV. 1 2013 EDITION				NATIONAL BOARD NO:			
MAWP: 700	PSI @ 150	°F	MDMT: -40	°F @ 150	PSI		
INTERNAL DESIGN ---	PSI @ ---	°F	NORMAL OPERATING: ---	PSI @ ---	°F		
EXTERNAL DESIGN ---	PSI @ ---	°F					
IMPACT TEST EXEMPTION:	UCS-66(b)		PWHT: ---	HOURS @ ---	°F		
SHOP HYDROTEST PRESSURE: 945	PSI		FIELD HYDROTEST PRESSURE:		PSI		
SHELL CA: 0.00"	NOZZLES CA: 0.0"		HEADS CA: 0.00	INTERNALS CA:			
LONG X-RAY: ---	JE 70		GIRTH X-RAY: ---	JE 70			
NOZ: ---							

1. NOZZLE BOLT HOLES SHALL STRADDLE NORMAL VESSEL CLS
2. DRILL 1/4" TELLTALE HOLE IN EACH REINFORCING PAD SEGMENT
3. NOZZLE PROJECTION ARE MEASURED FROM CS OF VESSEL TO FACE OF FLANGE.

NO	REVISIONS	BY	CHK BY
	FOR APPROVAL		

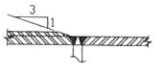

ALL "C" SEAM WELD DETAILS

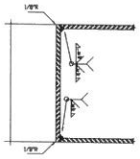

CONNECTION PIPE WELD DETAIL
(F)(E)

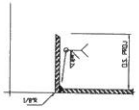

PIPE END NOZZLE WELD DETAIL
(Q)(P)(M)

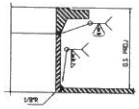

WELDNECK NOZZLE WELD DETAIL
(L)

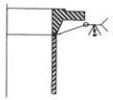

WELDNECK NOZZLE WELD DETAIL
(N)(O)

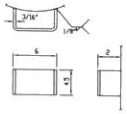

NAMEPLATE BRACKET

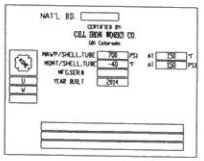

NAMEPLATE
NTS

REV.	DESCRIPTION	DATE
2	Approved for Fabrication	12/01/14
1	Revised For Review	10/13/14
0	For Review	10/09/14

Glycol Specialists, Inc.
Recapture Solutions, LLC
1-3 MMcfd MRU/Stabilizer Skid
GSI Job #2054
CMWS Job #1419

DR. BY: TC CH'D BY: JH

TITLE:
E-1,2 Gas/Gas Heat Exchanger
Chiller
Shell Fabrication Details

DATE: 12/01/14 SCALE: Varies SHEET: 2 of 2

CREATIVE MECHANICAL & WELDING SERVICES, INC.
7603 MILLER DR. FREDERICK, CO 80504
303-776-9741 FAX 303-776-2057

DWG. NO. 1419-46-SD-31 REV. 2

THIS DRAWING IN ALL PARTICULARS IS OUR PROPERTY. ALL RIGHTS OF DESIGN, INVENTION OR USE ARE RESERVED.

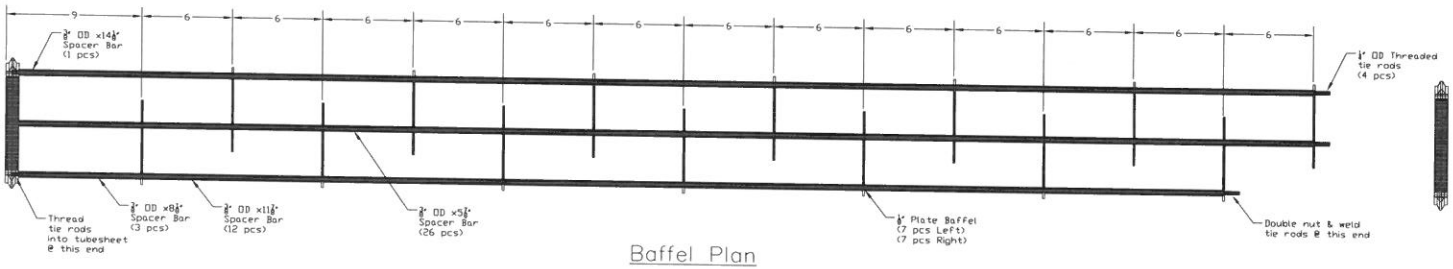

Baffel Plan

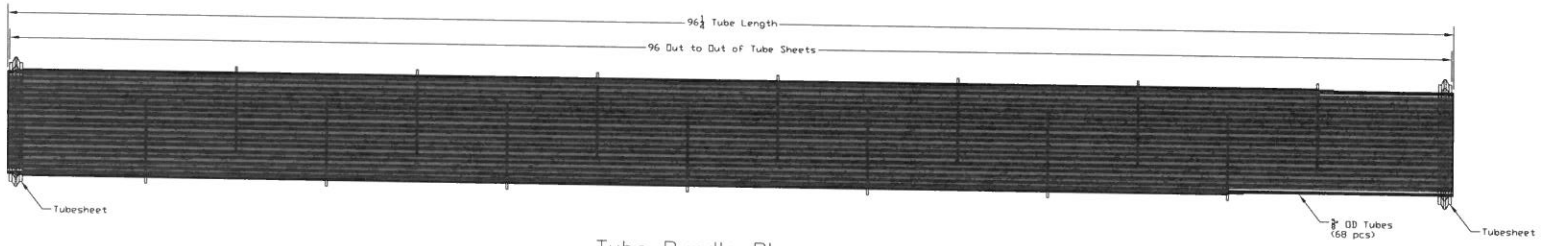

Tube Bundle Plan

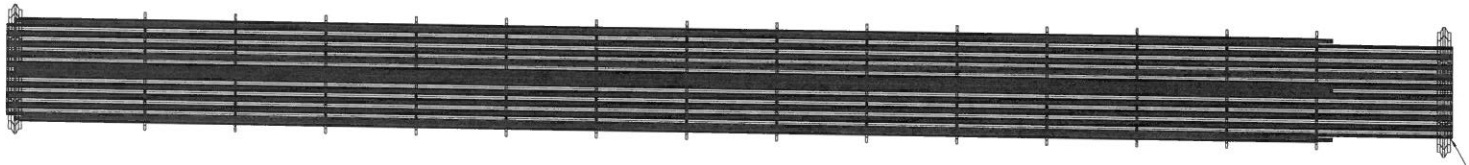

Tube Bundle Elevation

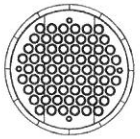

Right Elevation

Tubes extend 1/8" from tubesheet roll or fully weld tubes to tubesheet after inserted into shell

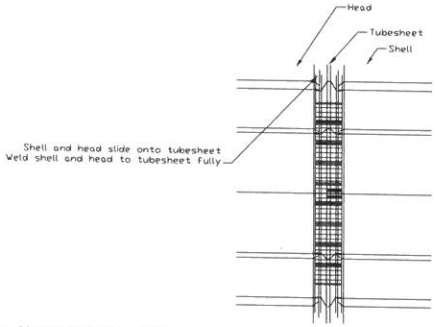

Tubesheet Assembly Detail
Section View, Tubes not shown

Notes:
1. Four Total Tube Bundles Needed for E-1,2

REV.	DESCRIPTION	DATE
2	Approved for Fabrication	12/01/14
1	Revised For Review	10/13/14
0	For Review	10/09/14

Glycol Specialists, Inc.
Recapture Solutions, LLC
1-3 MMcfd MRU/Stabilizer Skid
GSI Job #2054
CMWS Job #1419

DR. BY: TC CH'D BY: JH

TITLE: E-1,2 Gas/Gas Heat Exchanger Chiller
Tube Bundle Assembly Details

DATE: 12/01/14 SCALE: 1.5"=1' SHEET: 1 of 1

CREATIVE MECHANICAL & WELDING SERVICES, INC.
7603 MILLER DR. FREDERICK, CO 80504
303-776-9741 FAX 303-776-2057

DWG. NO. 1419-46-SD-32 REV. 2

THIS DRAWING IN ALL PARTICULARS IS OUR PROPERTY. ALL RIGHTS OF DESIGN, INVENTION OR USE ARE RESERVED.

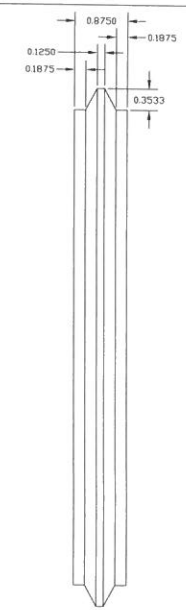

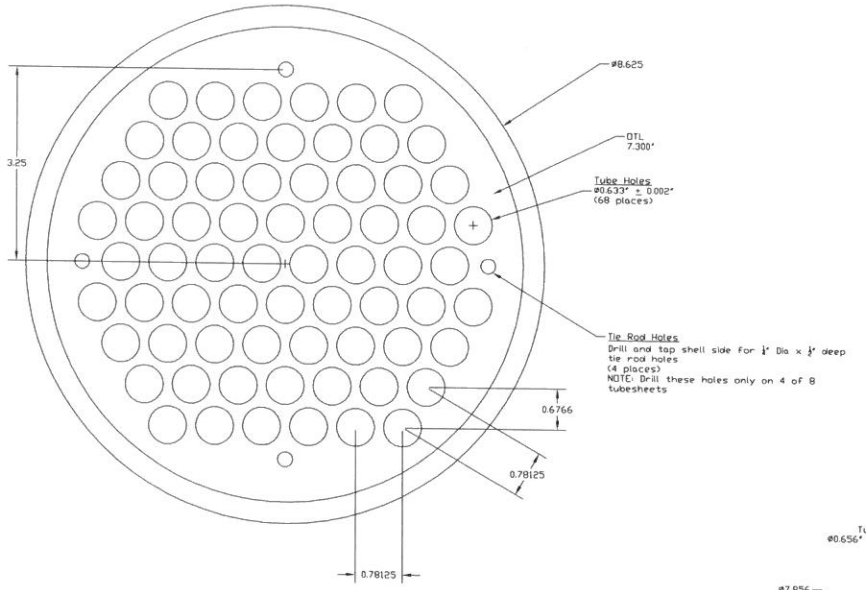

Tubesheet
8 total pcs needed

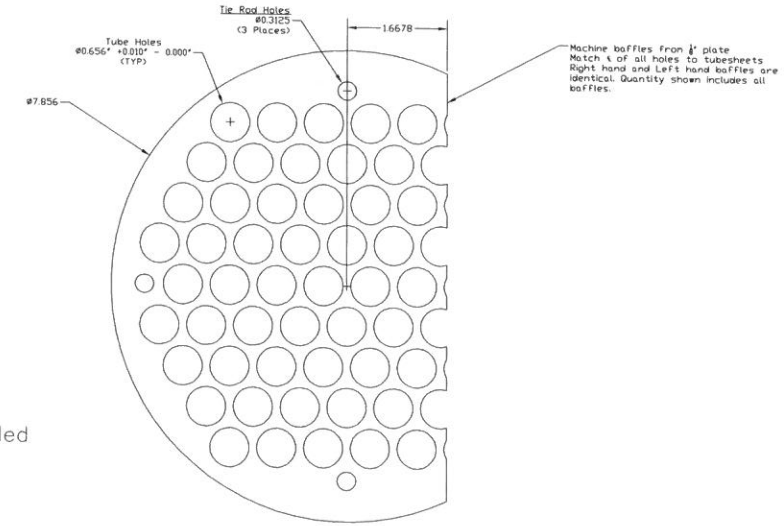

Baffle
56 total pcs needed

Notes:
1. Qtys shown are all parts needed for E-1,2

REV.	DESCRIPTION	DATE
1	Revised For Review	10/13/14
0	For Review	10/09/14

Glycol Specialists, Inc.
Recapture Solutions, LLC
1-3 MMcfd MRU/Stabilizer Skid
GSI Job #2054
CMWS Job #1419

DR. BY: TC CH'D BY: JH

TITLE:
E-1,2
Gas / Gas Heat Exchanger
Chiller
Tubesheet & Baffle Details

DATE: 10/13/14 SCALE: 6"=1' SHEET: 1 of 1

CREATIVE MECHANICAL & WELDING SERVICES, INC.
7603 MILLER DR. FREDERICK, CO 80504
303-776-9741 FAX 303-776-2057

DWG. NO. 1419-46-SD-33 REV. 1

THIS DRAWING IN ALL PARTICULARS IS OUR PROPERTY. ALL RIGHTS OF DESIGN, INVENTION OR USE ARE RESERVED.

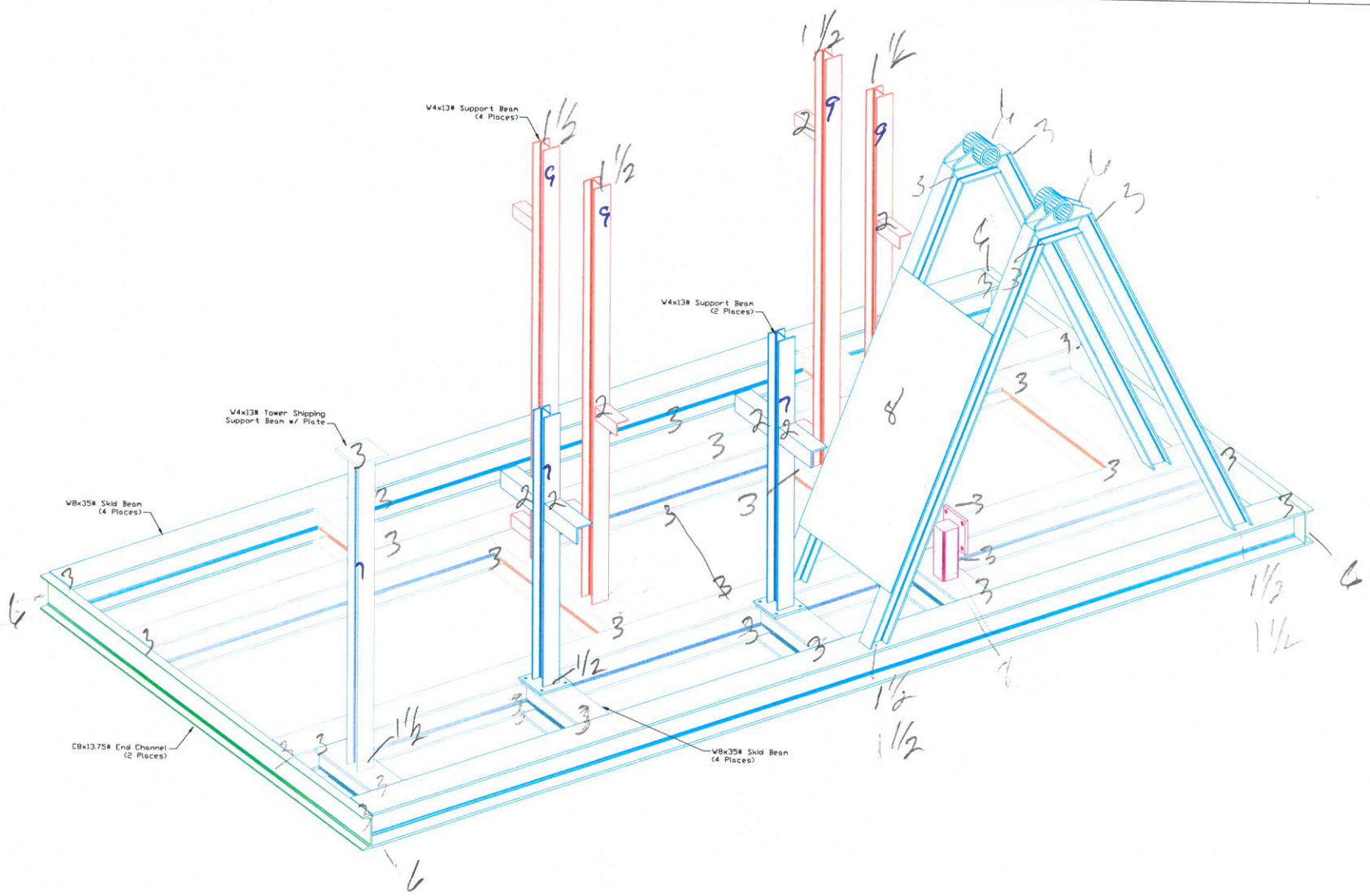

Notes:
1. Schematic layout for review only.
2. All dimensions approximate.
3. Equipment based on best information available. Subject to change.
4. Skid layout and orientation subject to change.

REV.	DESCRIPTION	DATE
1	For Construction	12/31/14
0	For Review	12/27/14

Glycol Specialist
Recapture Solutions, LLC
1-3 MCFD Gas / Liquids Plant
GSI Job #2054
CMWS Job #1419

DR. BY: TC CH'D BY: JH

TITLE: Skid Base Layout

DATE: 12/31/14 SCALE: None SHEET: 1 of

DWG. NO. 1419-41-SD-31 REV. 1

CREATIVE MECHANICAL & WELDING SERVICES, INC.
7603 MILLER DR. FREDERICK, CO 80504
303-776-9741 FAX 303-776-2057

THIS DRAWING IN ALL PARTICULARS IS OUR PROPERTY. ALL RIGHTS OF DESIGN, INVENTION OR USE ARE RESERVED.

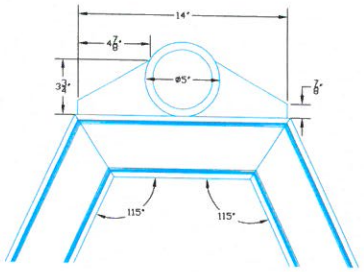

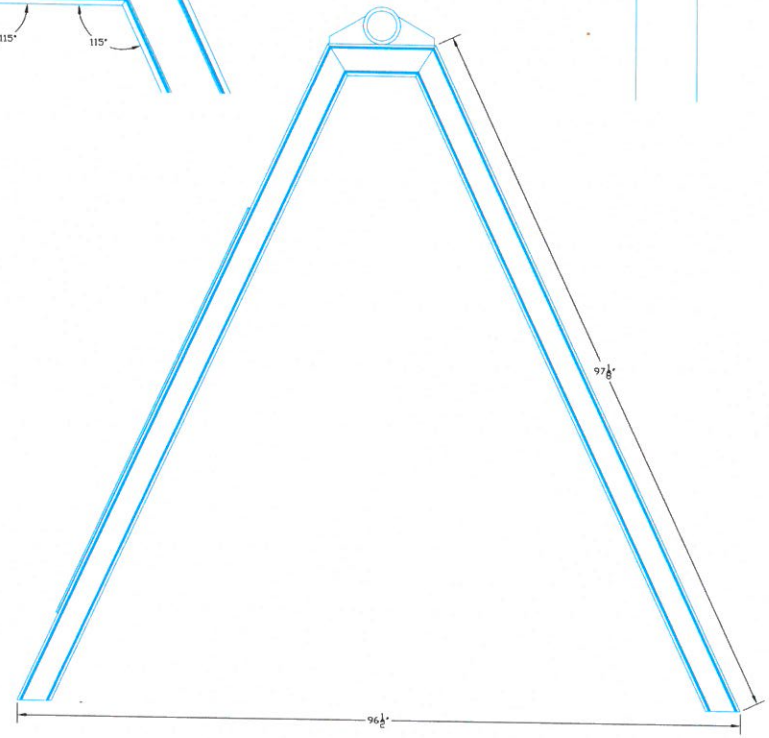

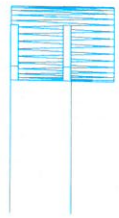

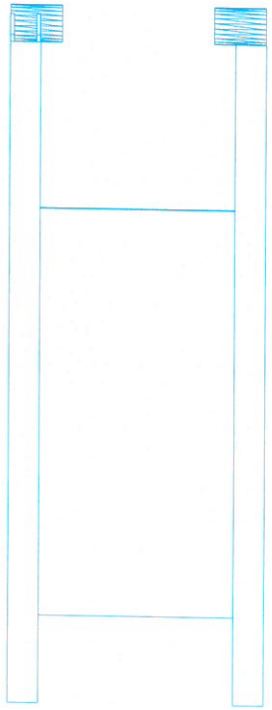

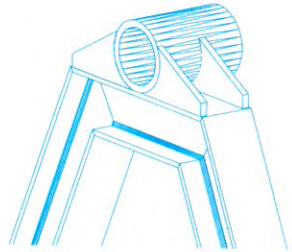

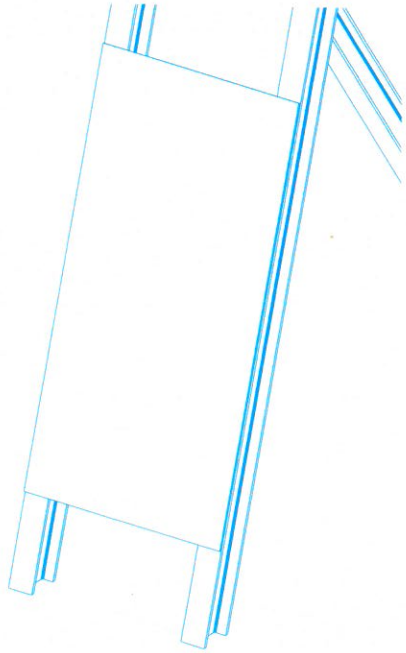

Plan View

Notes:
1. Field Verify All Dimensions!

REV.	DESCRIPTION	DATE
1	For Construction	12/31/14
0	For Review	12/27/14

Glycol Specialist
Recapture Solutions, LLC
1-3 MCFD Gas / Liquids Plant

GSI Job #2054
CMWS Job #1419

DR. BY: TC CH'D BY: JH

TITLE: Skid Base Fabrication Details

DATE: 12/31/14 SCALE: 1/2"=1' SHEET: 3 of

DWG. NO. 1419-41-SD-31 REV. 1

CREATIVE MECHANICAL & WELDING SERVICES, INC.
7603 MILLER DR. FREDERICK, CO 80504
303-776-9741 FAX 303-776-2057

THIS DRAWING IN ALL PARTICULARS IS OUR PROPERTY. ALL RIGHTS OF DESIGN, INVENTION OR USE ARE RESERVED.

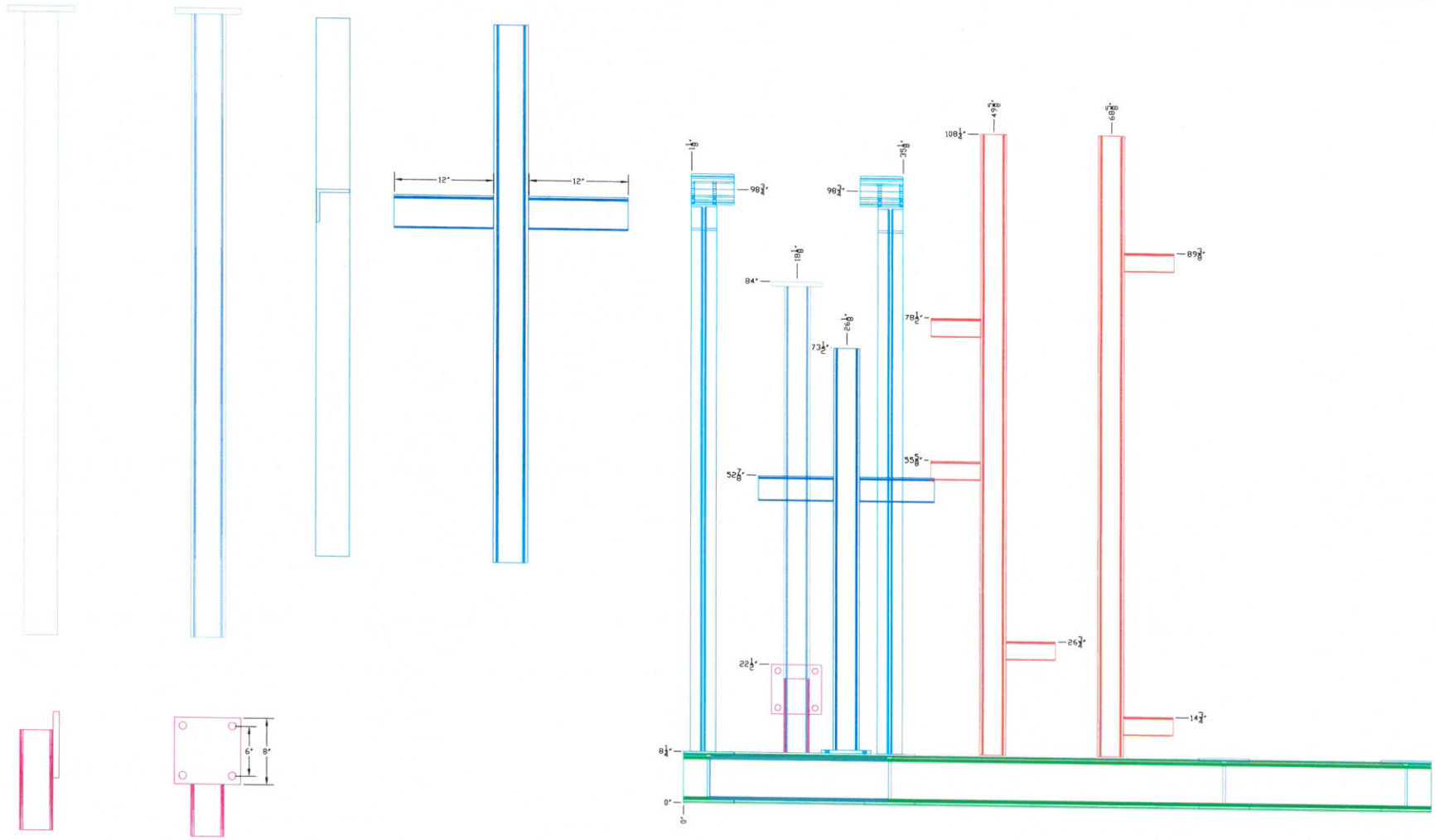

Plan View

Notes:
1. Field Verify All Dimensions!

REV.	DESCRIPTION	DATE
1	For Construction	12/31/14
0	For Review	12/27/14

Glycol Specialist
Recopture Solutions, LLC
1-3 MCFD Gas / Liquids Plant
GSI Job #2054
CMWS Job #1419

DR. BY: TC CH'D BY: JH

TITLE: Skid Base Fabrication Details

DATE: 12/31/14 SCALE: 1/2"=1' SHEET: 3 of

DWG. NO. 1419-41-SD-31 REV. 1

CREATIVE MECHANICAL & WELDING SERVICES, INC.
7603 MILLER DR. FREDERICK, CO 80504
303-776-9741 FAX 303-776-2057

THIS DRAWING IN ALL PARTICULARS IS OUR PROPERTY. ALL RIGHTS OF DESIGN, INVENTION OR USE ARE RESERVED.

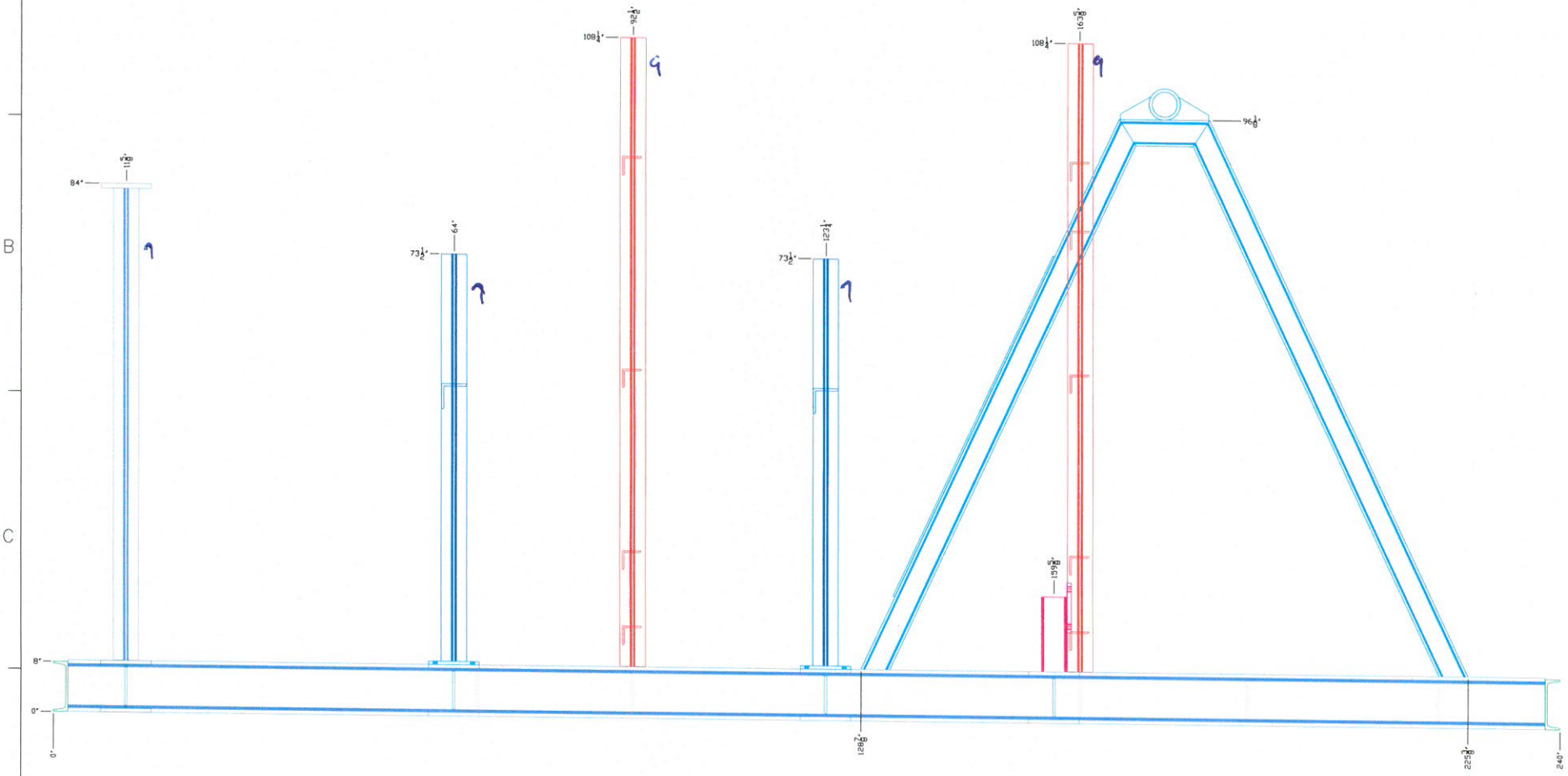

Plan View

Notes:
1. Field Verify All Dimensions!

REV.	DESCRIPTION	DATE
1	For Construction	12/31/14
0	For Review	12/27/14

Glycol Specialist
Recapture Solutions, LLC
1-3 MCFD Gas / Liquids Plant

GSI Job #2054
CMWS Job #1419

DR. BY: TC CH'D BY: JH

TITLE: Skid Base Fabrication Details

DATE: 12/31/14 SCALE: 1/2"=1' SHEET: 3 of

DWG. NO. 1419-41-SD-31 REV. 1

CREATIVE MECHANICAL & WELDING SERVICES, INC.
7603 MILLER DR. FREDERICK, CO 80504
303-776-9741 FAX 303-776-2057

THIS DRAWING IN ALL PARTICULARS IS OUR PROPERTY. ALL RIGHTS OF DESIGN, INVENTION OR USE ARE RESERVED.

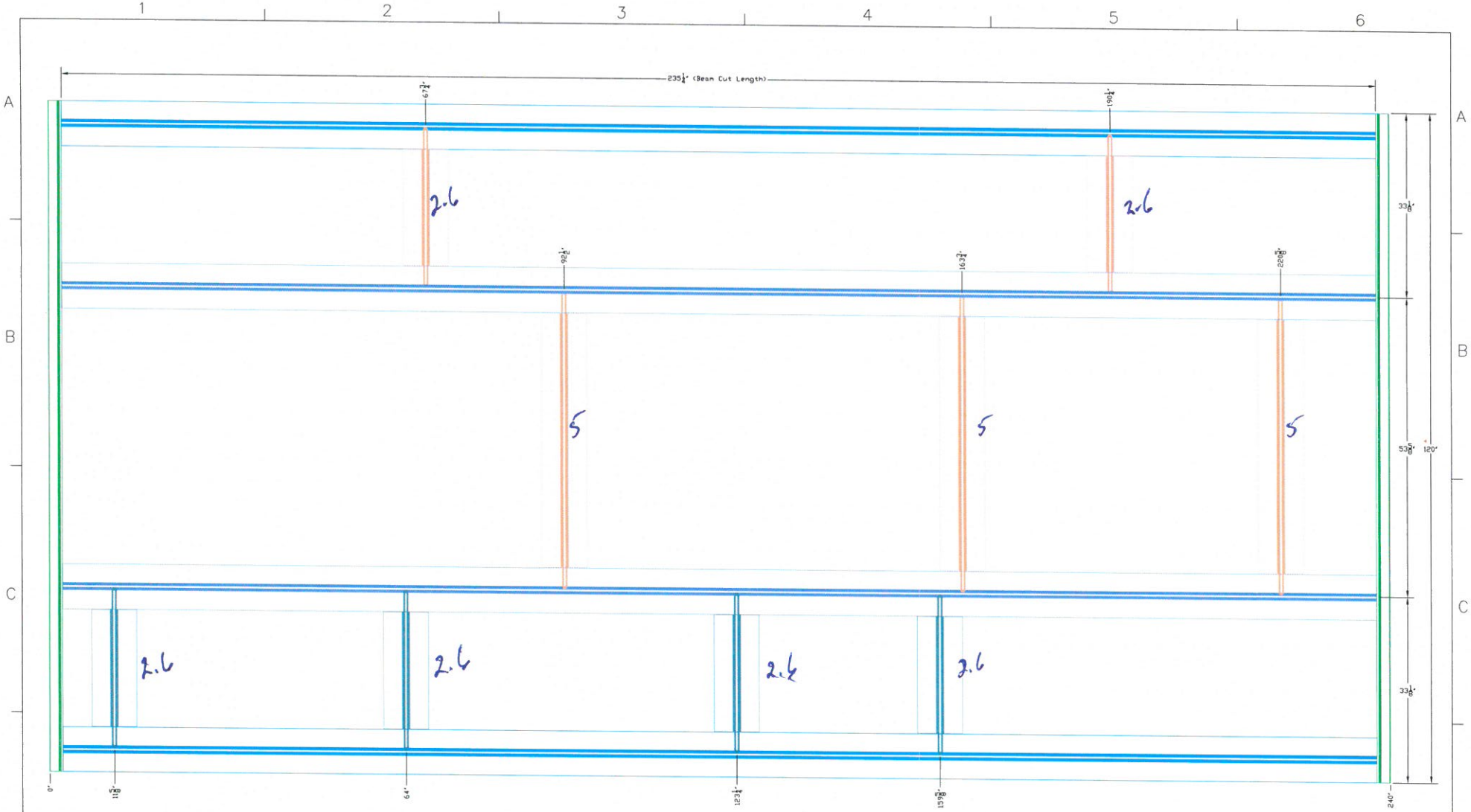

Plan View

Notes:
1. Field Verify All Dimensions!

REV.	DESCRIPTION	DATE
1	For Construction	12/31/14
0	For Review	12/27/14

Glycol Specialist
Recapture Solutions, LLC
1-3 MCFD Gas / Liquids Plant

CSI Job #2054
CMWS Job #1419

DR. BY: TC CK'D BY: JH

TITLE: Skid Base Fabrication Details

DATE: 12/31/14 SCALE: 1/2"=1' SHEET: 2 of

DWG. NO. 1419-41-SD-31 REV. 1

CREATIVE MECHANICAL & WELDING SERVICES, INC.
7603 MILLER DR. FREDERICK, CO 80504
303-776-9741 FAX 303-776-2057

THIS DRAWING IN ALL PARTICULARS IS OUR PROPERTY. ALL RIGHTS OF DESIGN, INVENTION OR USE ARE RESERVED.

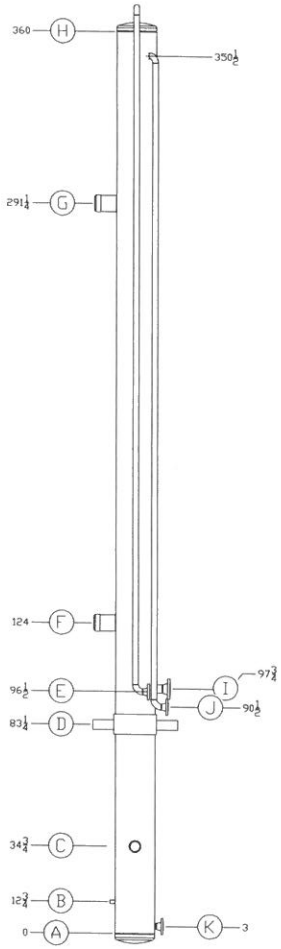

Left Elevation

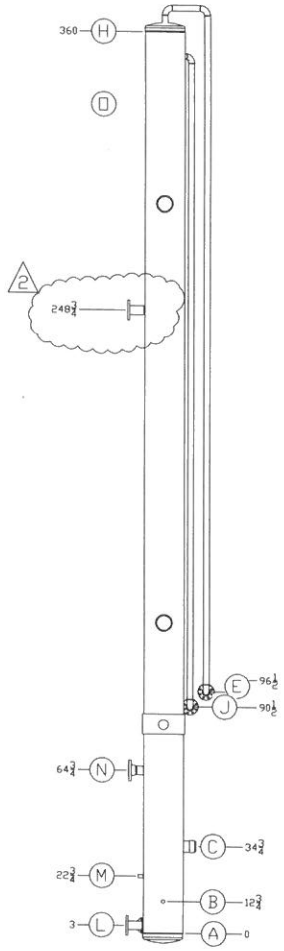

Front Elevation

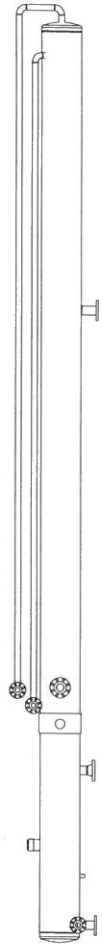

Rear Elevation

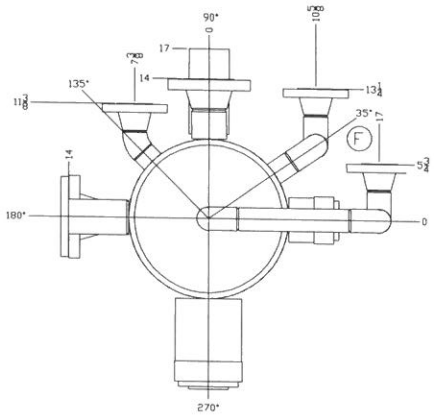

Component Schedule

Item	Desc.	Size	Type
A	Tower Shell	16"	-- CS
B	Temperature Indicator	¾"	3000# Thd Coupling
C	Level Controller	4"	WellMark Fitting
D	Pivot Trunnion	4"	¾" Well Tube
E	Gas Outlet	2"	300# RFWN
F	Packing Access	6"	WellMark Fitting
G	Packing Access	6"	Wellmark Fitting
H	Tower Shell	16"	-- CS
I	Liquid Out to Reboiler	3"	300# RFWN
J	Liquid Inlet to Tower	2"	300# RFWN
K	Liquid Outlet	2"	300# RFWN
L	Lower Tower Support Foot	3"	Plate
M	Temperature Transmitter	1"	3000# Thd Coupling
N	Return From Reboiler	3"	300# RFWN
O	Upper Tower Support Foot	3"	Plate
P	--	--	--
Q	--	--	--
R	Packing Support	--	Expanded Metal
S	--	--	--
T	Elbow, 90° LRBW	3"	CS

DESIGN DATA

DESIGN CODE: ASME SECT. VIII DIV. I 2013 EDITION		NATIONAL BOARD NO:	
MAWP: 750 PSI @ 150 °F		MDMT: -40 °F @ 150 PSI	
INTERNAL DESIGN — PSI @ — °F		NORMAL OPERATING — PSI @ — °F	
EXTERNAL DESIGN — PSI @ — °F			
DIRECT TEST EXEMPTION UCS-660(a)		PWHT: — HOURS @ — °F	
SHOP HYDROTEST PRESSURE: 945 PSI		FIELD HYDROTEST PRESSURE PSI	
SHELL CA: 0.0"	NOZZLES CA: 0.0"	HEADS CA: 0.0	INTERNALS CA:
LONG X-RAY: — JC 79		GIRTH X-RAY: — JC 79	
HRD —			

1. NOZZLE BOLT HOLES SHALL STRADDLE NORMAL VESSEL C.L.S.
2. DRILL 1/4" TELLTALE HOLE IN EACH REINFORCING PAD SEGMENT
3. NOZZLE PROJECTION ARE MEASURED FROM CR OF VESSEL TO FACE OF FLANGE.

NO	REVISIONS	BY	CHK BY
	FOR APPROVAL		

APPROVED FOR CONSTRUCTION:

A.I.: _____ DATE: ___

ENG: _____ DATE: ___

REV.	DESCRIPTION	DATE
2	Revise Nozzel Locations, For Fabrication	12/10/14
1	For Fabrication, Add code stamp info	12/01/14
0	For Quotes	10/20/14

Recapture Solutions, Inc.
1-3 MMCFD Gas / Liquids Plant

GSI Job #2054
CMWS Job #1419

DR. BY: TC CH'D BY: JH

TITLE: Tower Fabrication Details

DATE: 12/10/14 SCALE: NONE SHEET: 1 of 2

DWG NO. 1419-43-SD-31 REV. 2

GLYCOL SPECIALIST INC.
14 Lakeside Lane Denver, CO 80212
Ph 303-477-6999 Fax 303-458-7050

THIS DRAWING IN ALL PARTICULARS IS OUR PROPERTY. ALL RIGHTS OF DESIGN, INVENTION OR USE ARE RESERVED.

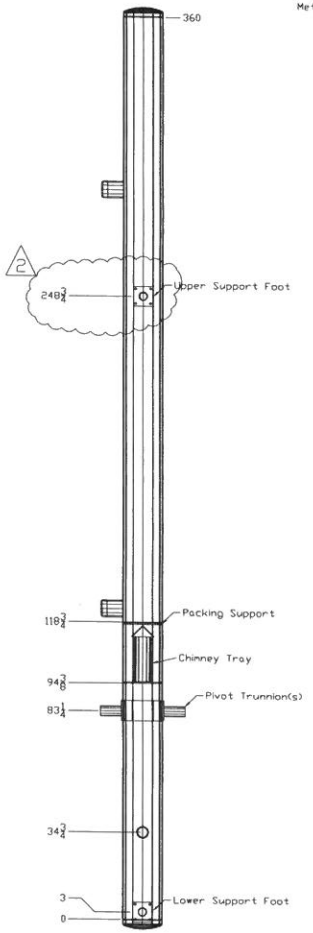

Left Elevation

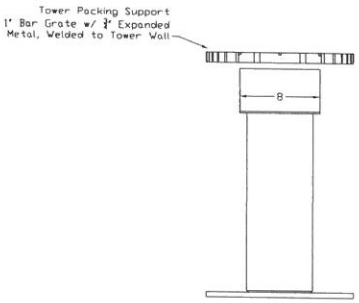

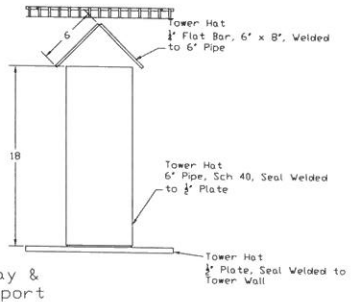

Chimney Tray & Packing Support Details

Upper & Lower Support Details

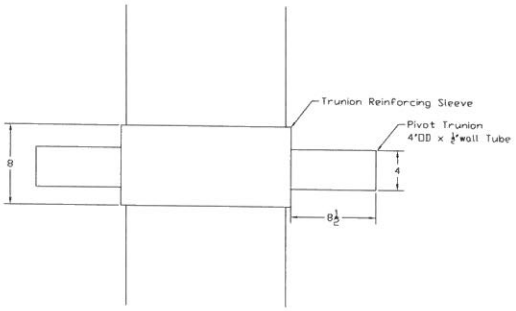

Pivot Trunnion Details

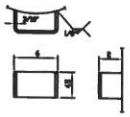

NAMEPLATE BRACKET

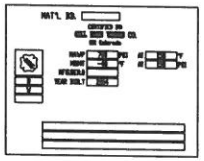

NAMEPLATE

NTS

DESIGN DATA

DESIGN CODE: ASME SECT. VIII DIV. 1 2013 EDITION							MATERIAL SPECS MD:		
MAWP: 750	PSI @	150	°F	MAWT:	-40	°F @	150	PSI	
INTERNAL DESIGN: —	PSI @	—	°F	NORMAL OPERATING:	—	PSI @	—	°F	
EXTERNAL DESIGN: —	PSI @	—	°F						
IMPACT TEST EXEMPTION: UCS-66(b)				PWHT: —		HOURS @	—	°F	
SHOP HYDROTEST PRESSURE: 945		PSI		FIELD HYDROTEST PRESSURE:				PSI	
SHELL CA: 0.00"	NOZZLES CA: 0.0"			HEADS CA: 0.00		INTERNALS CA:			
LONG X-RAY: —		JE. 70		GIRTH X-RAY:	—			JE. 70	
MDD: —									

1. NOZZLE BOLT HOLES SHALL STRADDLE NORMAL VESSEL C.L.
2. DRILL 1/4" TELLTALE HOLE IN EACH REINFORCING PAD SEGMENT
3. NOZZLE PROJECTION ARE MEASURED FROM OS OF VESSEL TO FACE OF FLANGE.

NO	REVISIONS	BY	CHK BY
	FOR APPROVAL		

LONG/ROUND SEAM WELD

C1 C2 C3

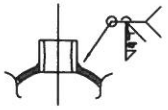

TYPICAL CPLG/ WELLMARK WELD DETAIL

B C F G M

PIPE END NOZZLE WELD DETAIL

E J

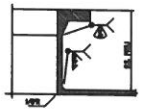

WELDNECK NOZZLE WELD DETAIL

I K N

APPROVED FOR CONSTRUCTION:

A.I.: _____ DATE: ___

ENG: _____ DATE: ___

General Notes:
1. Material is carbon steel.
2.

REV.	DESCRIPTION	DATE
2	Revise Nozzel Locations, For Fabrication	12/10/14
1	For Fabrication, Add code stamp info	12/01/14
0	For Quotes	10/20/14

Recapture Solutions, Inc.
1-3 MMCFD Gas / Liquids Plant

GSI Job #2054
CMWS Job #1419

DR. BY: TC CH'D BY: JH

TITLE: Tower Fabrication Details

DATE: 12/10/14 SCALE: NONE SHEET: 2 of 2 DWG. NO: 1419-43-SD-31 REV: 2

GLYCOL SPECIALIST INC.
14 Lakeside Lane Denver, CO 80212
Ph 303-477-6999 Fax 303-458-7050

THIS DRAWING IN ALL PARTICULARS IS OUR PROPERTY. ALL RIGHTS OF DESIGN, INVENTION OR USE ARE RESERVED.

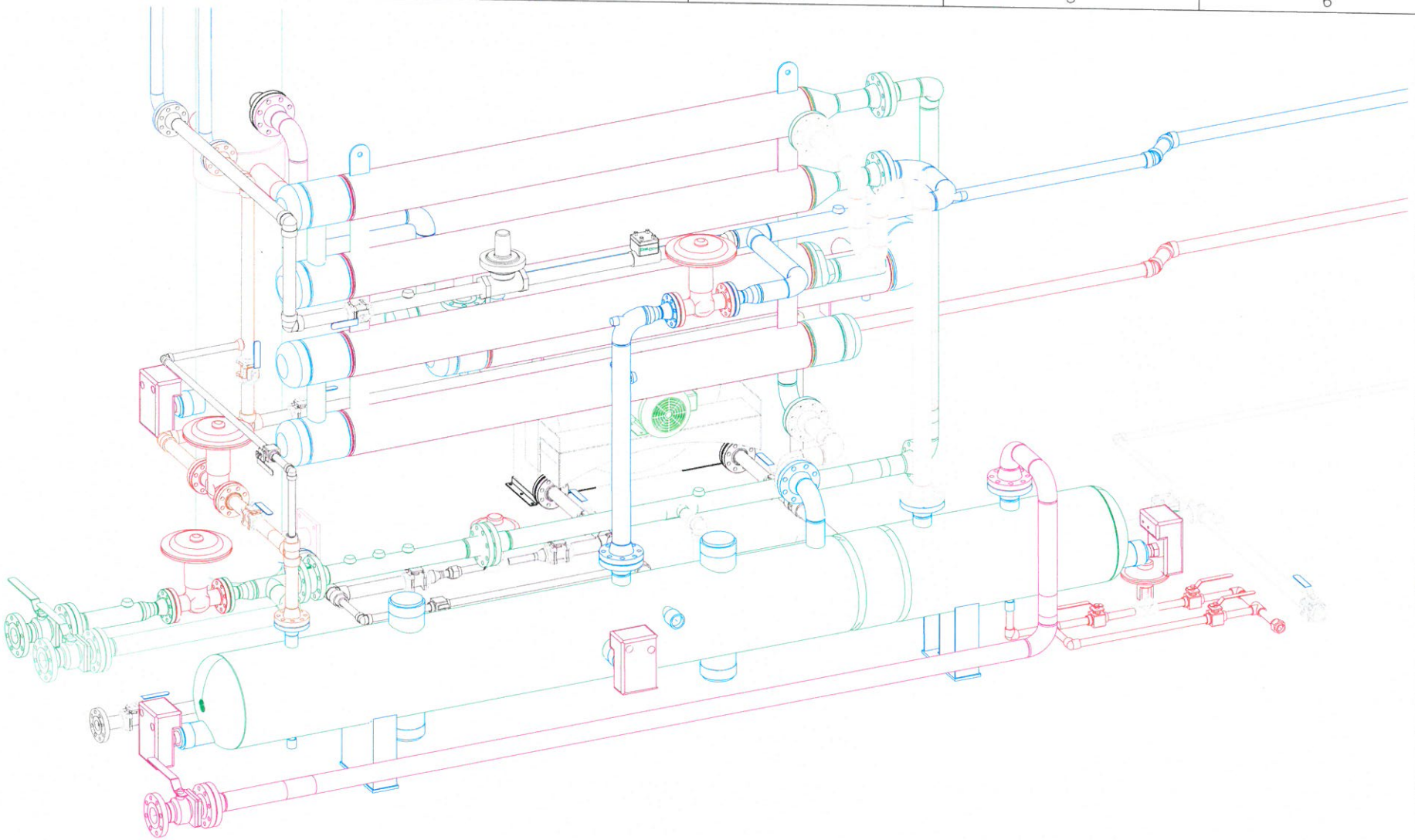

REV.	DESCRIPTION	DATE
1	For Construction	
0	For Review	12/27/14

Glycol Specialist
Recapture Solutions, LLC
1-3 MCFD Gas / Liquids Plant

GSI Job #2054
CMWS Job #1419

DR. BY: TC
CH'D BY: JH

TITLE:

DATE: 12/27/14
SCALE: 1/2"=1'
SHEET: 2 of

CREATIVE MECHANICAL & WELDING SERVICES, INC.
7603 MILLER DR. FREDERICK, CO 80504
303-776-9741 FAX 303-776-2057

DWG. NO. 1419-41-SD-50
REV. 1

THIS DRAWING IN ALL PARTICULARS IS OUR PROPERTY. ALL RIGHTS OF DESIGN, INVENTION OR USE ARE RESERVED.

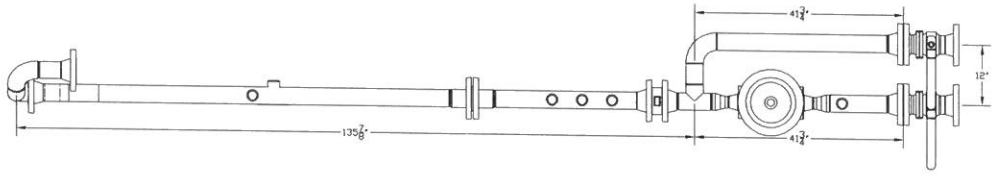

Plan

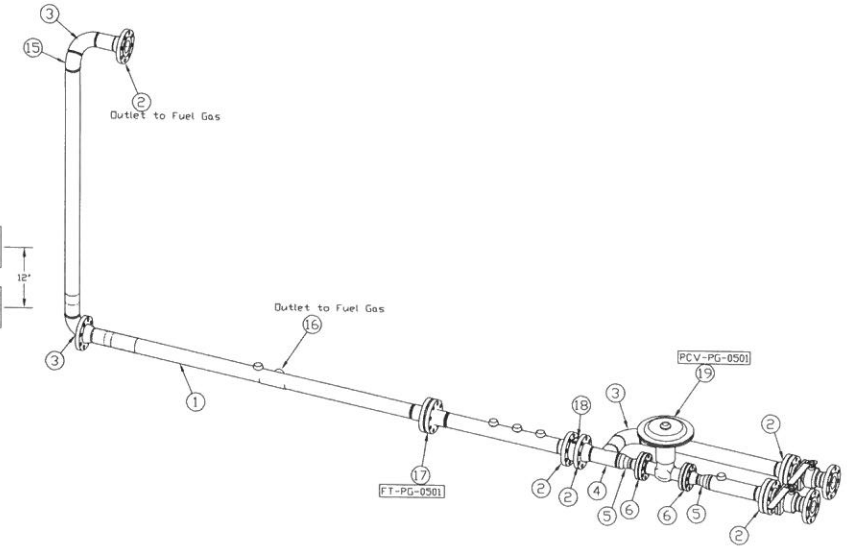

Right / Front ISO

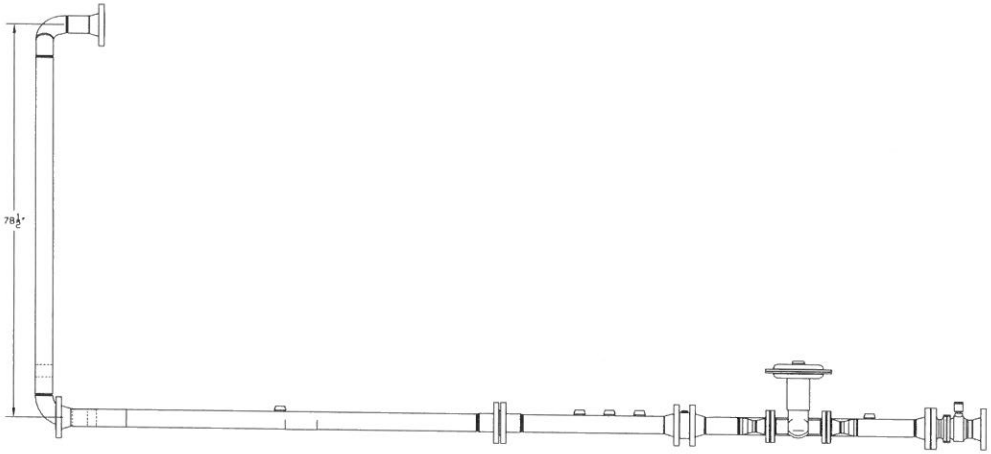

Front Elevation

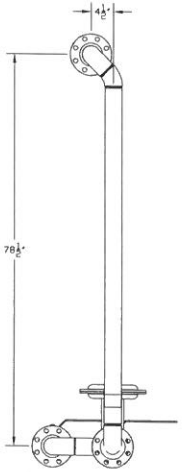

Right Elevation

Bill Of Materials

Item	Desc.	Part #	Quan
1	3" Sch 40 A53 Gr B Pipe		
2	3" 300# RFWN Flange, Sch 40 Bore		
3	3" Sch 40 90° Ell, LR, BW		
4	3" Sch 40 Tee, BW		
5	3"x2" Sch 40 Conc Reducer, BW		
6	2" 300# RFWN Flange		
7	2" 300# Garlock Gasket, 1/8" Thk		
8	2" 300# RFSOC Flange		
9	2" 3000# 90° Ell, Soc		
10	2" 3000# Tee, Soc		
11	2" x 1" 3000# Ins x Soc Reducer		
12	3"x1" 3000# Soc-O-Let		
13	3"x1/2" 3000# Thread-O-Let		
14	3"x 1/2" 3000# Elbowlet		
15	3" Sch 40 45° Ell, BW		
16	3"x2" Sch 40 Reducing Tee, BW		
17	Flow Meter		
18	3" Wafer Check Valve		
19	2" Kimray Control Valve		
20			

Notes:
1.

REV.	DESCRIPTION	DATE
1	For Construction	12/31/14
0	For Review	12/27/14

Glycol Specialist
Recapture Solutions, LLC
1-3 MCFD Gas / Liquids Plant
GSI Job #2054
CMWS Job #1419

DR. BY: TC CH'D BY: JH

TITLE: PG-05 Processed Gas Outlet Piping Fab Details

DATE: 12/31/14 SCALE: 1/2"=1' SHEET: 1 of

DWG. NO. 1419-41-SD-55 REV. 1

CREATIVE MECHANICAL & WELDING SERVICES, INC.
7603 MILLER DR. FREDERICK, CO 80504
303-776-9741 FAX 303-776-2057

THIS DRAWING IN ALL PARTICULARS IS OUR PROPERTY. ALL RIGHTS OF DESIGN, INVENTION OR USE ARE RESERVED.

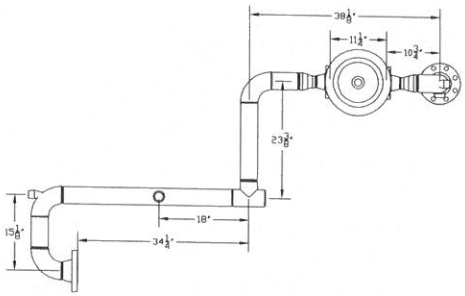

Plan

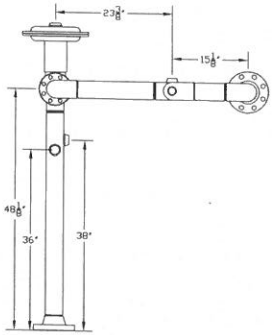

Left Elevation

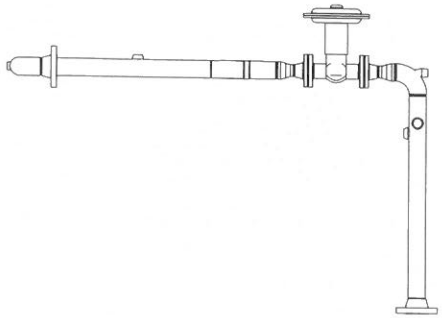

Front Elevation

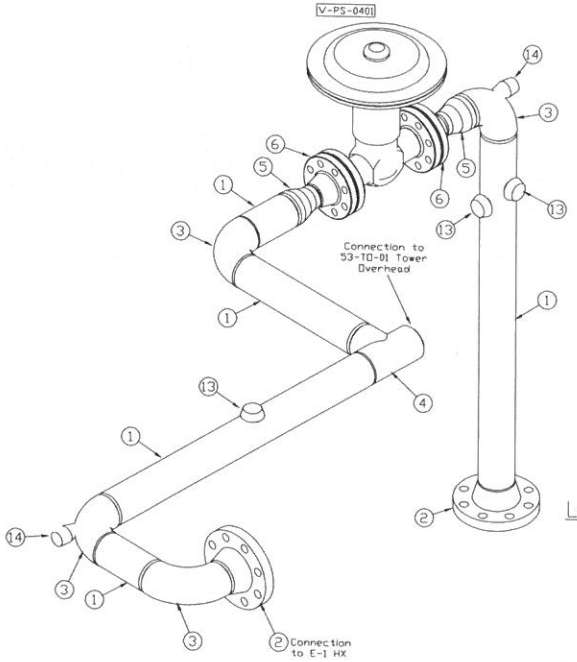

Left / Front ISO

Bill Of Materials

Item	Desc.	Part #	Quan
1	3" Sch 40 A53 Gr B Pipe		10
2	3" 300# RFWN Flange, Sch 40 Bore		2
3	3" Sch 40 90° Ell, LR, BW		4
4	3" Sch 40 Tee, BW		1
5	3"x2" Sch 40 Conc Reducer, BW		2
6	2" 300# RFWN Flange		2
7	2" 300# Garlock Gasket, 1/8" Thk		2
8	3"x1/2" 3000# Thread-O-Let		3
9	3"x 3/4" 3000# Elbowlet		2
10			
11			
12			

Notes:
1.

REV.	DESCRIPTION	DATE
1	For Construction	12/31/14
0	For Review	12/27/14

Glycol Specialist
Recapture Solutions, LLC
1-3 MCFD Gas / Liquids Plant
GSI Job #2054
CMWS Job #1419

DR. BY: TC CH'D BY: JH

TITLE: PG-04 V2 to E-1 Hx Piping Fab Details

DATE: 12/31/14 SCALE: 1/2"=1' SHEET: 1 of

CREATIVE MECHANICAL & WELDING SERVICES, INC.
7603 MILLER DR. FREDERICK, CO 80504
303-776-9741 FAX 303-776-2057

DWG. NO. 1419-41-SD-54 REV. 1

THIS DRAWING IN ALL PARTICULARS IS OUR PROPERTY. ALL RIGHTS OF DESIGN, INVENTION OR USE ARE RESERVED.

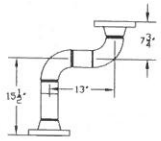

Plan

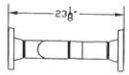

Right Elevation

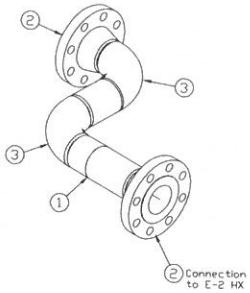

Left / Front ISO

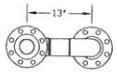

Front Elevation

Bill Of Materials

Item	Desc.	Part #	Quan
1	3" Sch 40 A53 Gr B Pipe		2
2	3" 300# RFWN Flange, Sch 40 Bore		2
3	3" Sch 40 90° Ell, LR, BW		2
4	3"x 3/4" 3000# Elbowlet		
5	3"x1/2" 3000# Thread-O-Let		
6			
7			
8			
9			
10			

Notes:
1.

REV.	DESCRIPTION	DATE
1	For Construction	12/31/14
0	For Review	12/27/14

Glycol Specialist
Recapture Solutions, LLC
1-3 MCFD Gas / Liquids Plant
GSI Job #2054
CMWS Job #1419
DR. BY: TC CH'D BY: JH

TITLE: PG-03 Chilled Gas to V-2 Piping Fab Details

DATE: 12/31/14 SCALE: 1/2"=1' SHEET: 1 of

DWG. NO. 1419-41-SD-53 REV. 1

CREATIVE MECHANICAL & WELDING SERVICES, INC.
7603 MILLER DR. FREDERICK, CO 80504
303-776-9741 FAX 303-776-2057

THIS DRAWING IN ALL PARTICULARS IS OUR PROPERTY. ALL RIGHTS OF DESIGN, INVENTION OR USE ARE RESERVED.

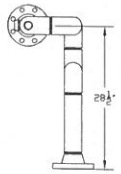

Plan

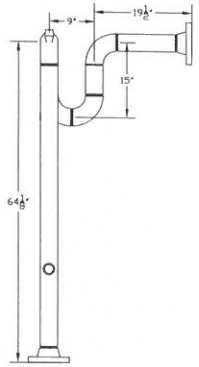

Right Elevation

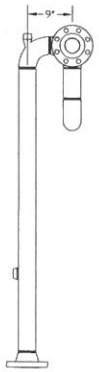

Front Elevation

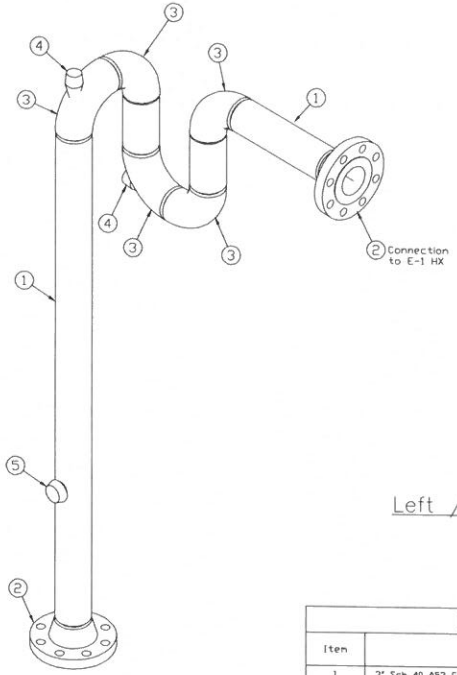

Left / Front ISO

Bill Of Materials

Item	Desc.	Part #	Quan
1	3" Sch 40 A53 Gr B Pipe		10
2	3" 300# RFWN Flange, Sch 40 Bore		2
3	3" Sch 40 90° Ell, LR, BW		5
4	3"x 1/2" 3000# Elbowlet		2
5	3"x1/2" 3000# Thread-O-Let		1
6			
7			
8			
9			
10			

Notes:
1.

REV.	DESCRIPTION	DATE
1	For Construction	12/31/14
0	For Review	12/27/14

Glycol Specialist
Recapture Solutions, LLC
1-3 MCFD Gas / Liquids Plant

GSI Job #2054
CMWS Job #1419

DR. BY: TC CH'D BY: JH

TITLE: PG-02 V-1 to HX Inlet Piping Fab Details

DATE: 12/31/14 SCALE: 1/2"=1' SHEET: 1 of

DWG. NO. 1419-41-SD-52 REV. 1

CREATIVE MECHANICAL & WELDING SERVICES, INC.
7603 MILLER DR. FREDERICK, CO 80504
303-776-9741 FAX 303-776-2057

THIS DRAWING IN ALL PARTICULARS IS OUR PROPERTY. ALL RIGHTS OF DESIGN, INVENTION OR USE ARE RESERVED.

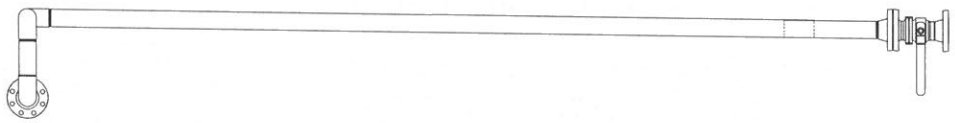

Plan

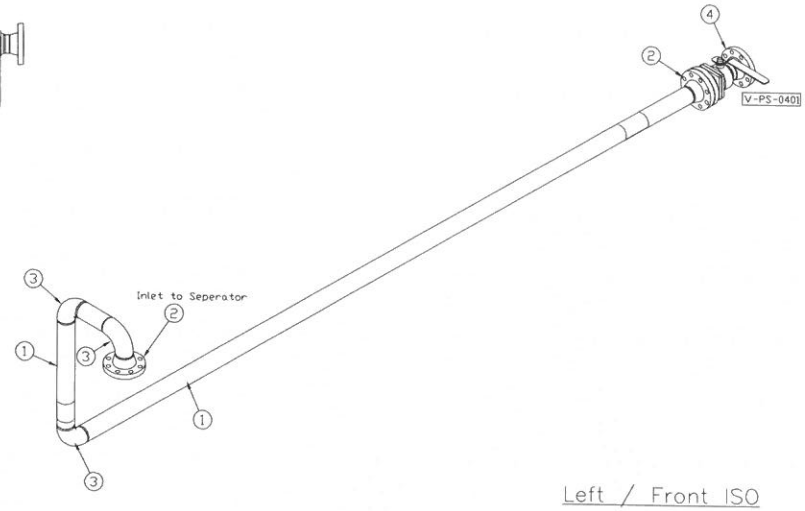

Left / Front ISO

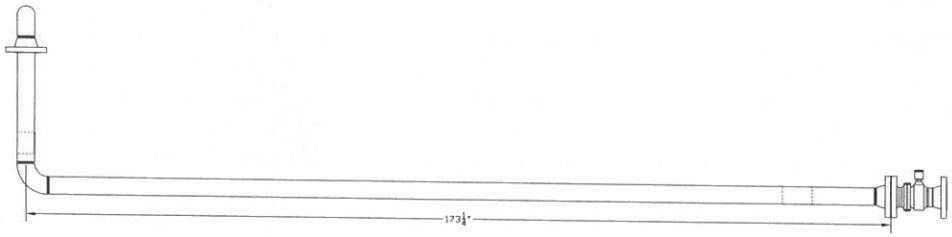

Front Elevation

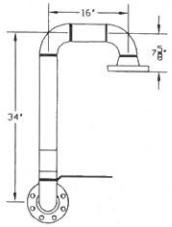

Right Elevation

Bill Of Materials

Item	Desc.	Part #	Quan
1	3" Sch 40 A53 Gr B Pipe		15
2	3" 300# RFWN Flange, Sch 40 Bore		2
3	3" Sch 40 90° Ell, LR, BW		3
4	3" Flanged Ball Valve		1
5			
6			
7			
8			
9			
10			

Notes:
1.

REV.	DESCRIPTION	DATE
1	For Construction	12/31/14
0	For Review	12/27/14

Glycol Specialist
Recapture Solutions, LLC
1-3 MCFD Gas / Liquids Plant
GSI Job #2054
CMWS Job #1419

DR. BY: TC CH'D BY: JH

TITLE: PG-01 Inlet Gas Piping Fabrication Details

DATE: 12/31/14 SCALE: 1/2"=1' SHEET: 1 of

DWG. NO. 1419-41-SD-51 REV. 1

CREATIVE MECHANICAL & WELDING SERVICES, INC.
7603 MILLER DR. FREDERICK, CO 80504
303-776-9741 FAX 303-776-2057

THIS DRAWING IN ALL PARTICULARS IS OUR PROPERTY. ALL RIGHTS OF DESIGN, INVENTION OR USE ARE RESERVED.

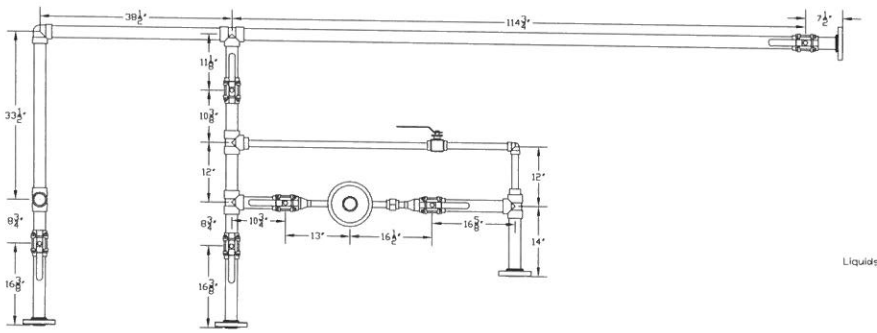

Plan

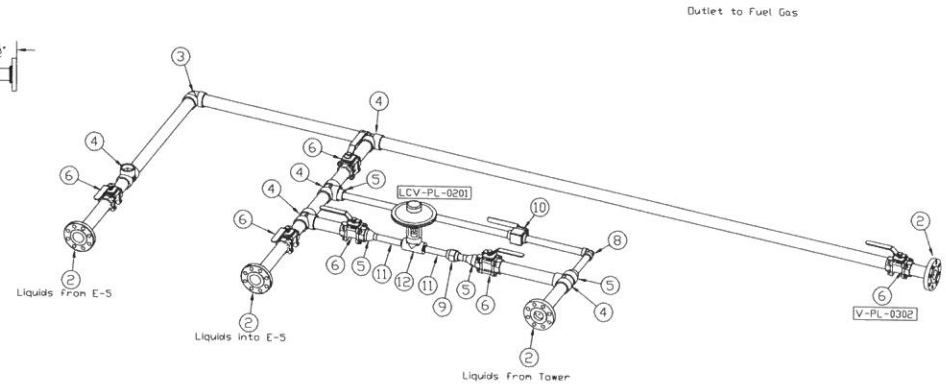

Right / Front ISO

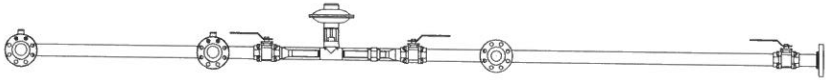

Front Elevation

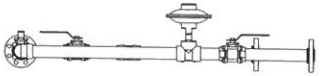

Right Elevation

Bill Of Materials

Item	Desc.	Part #	Quan
1	2" Sch 80 ASTM Gr B Pipe		
2	2" 300# RFSOC Flange, Sch 80 Bore		
3	2" 3000# 90° Ell, Soc		
4	2" 3000# Tee, Soc		
5	2"x1" 3000# Reducer, Insert x Soc		
6	2" 1000# 3pc. Ball Valve, Soc x Soc		
7	2" 300# Garlock Gasket, 1/8" Thk		
8	1" 3000# 90° Ell, Soc		
9	1" 3000# Union, Soc		
10	1" 1000# 3pc. Ball Valve, Soc x Soc		
11	1" x 8" Sch 80 Nipple, TOE		
12	1" Kimray Control Valve, Threaded		
13			
14			
15			

Notes:
1.

REV.	DESCRIPTION	DATE
1	For Construction	12/31/14
0	For Review	12/27/14

Glycol Specialist
Recapture Solutions, LLC
1-3 MCFD Gas / Liquids Plant
GSI Job #2054
CMWS Job #1419
DR. BY: TC CH'D BY: JH

TITLE: PL-02 Tower Liquids to E-5 Piping Fab Details

DATE: 12/31/14 SCALE: 1/2"=1' SHEET: 1 of

DWG. NO. 1419-41-SD-56 REV. 1

CREATIVE MECHANICAL & WELDING SERVICES, INC.
7603 MILLER DR. FREDERICK, CO 80504
303-776-9741 FAX 303-776-2057

THIS DRAWING IN ALL PARTICULARS IS OUR PROPERTY. ALL RIGHTS OF DESIGN, INVENTION OR USE ARE RESERVED.

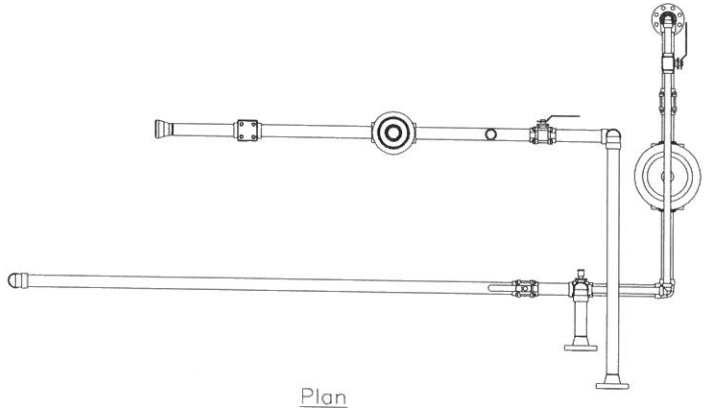

Plan

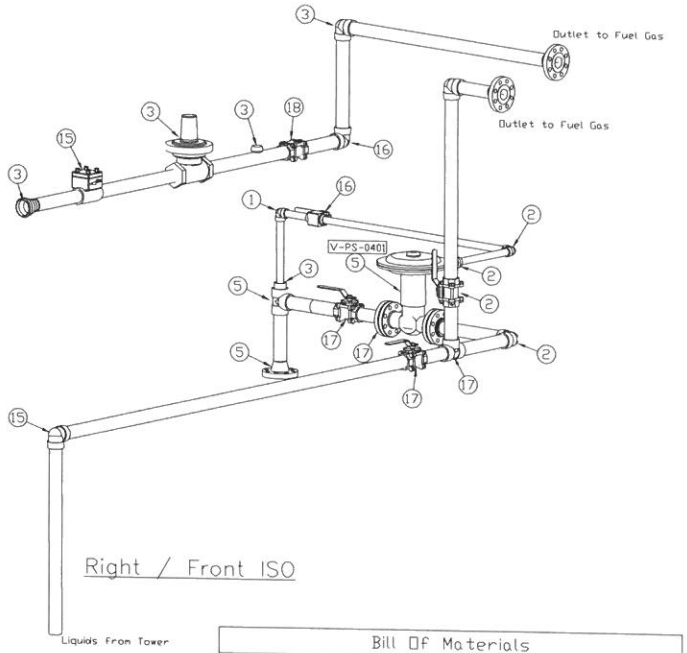

Right / Front ISO

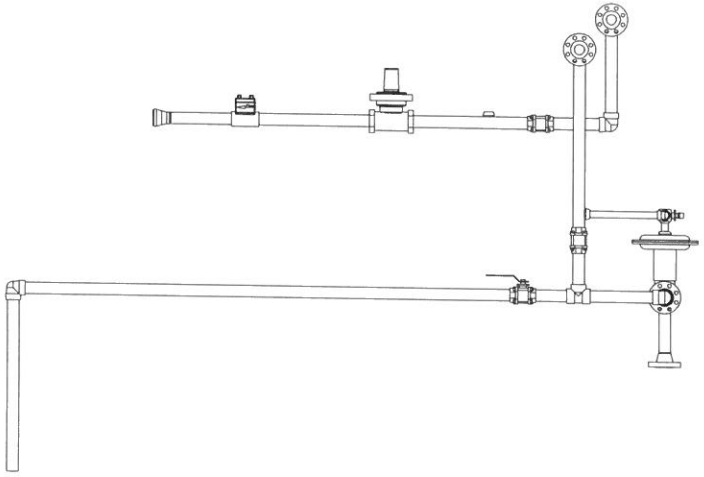

Front Elevation

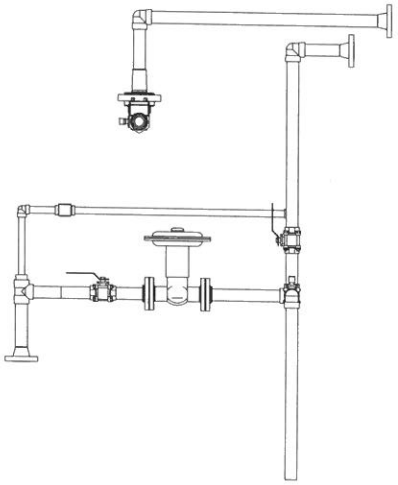

Right Elevation

Bill Of Materials

Item	Desc.	Part #	Quan
1	3" Sch 40 A53 Gr B Pipe		
2	3" 300# RFWN Flange, Sch 40 Bore		
3	3" Sch 40 90° Ell, LR, BW		
4	3" Sch 40 Tee, BW		
5	3"x2" Sch 40 Conc Reducer, BW		
6	2" 300# RFWN Flange		
7	2" 300# Garlock Gasket, 1/8" Thk		
8	2" 300# RFSOC Flange		
9	2" 3000# 90° Ell, Soc		
10	2" 3000# Tee, Soc		
11	2" x 1" 3000# Ins x Soc Reducer		
12	3"x1" 3000# Soc-O-Let		
13	3"x1/2" 3000# Thread-O-Let		
14	3"x 1/2" 3000# Elbowlet		
15	3" Sch 40 45° Ell, BW		
16	3"x2" Sch 40 Reducing Tee, BW		
17	Flow Meter		
18	3" Wafer Check Valve		
19			
20			

Notes:
1.

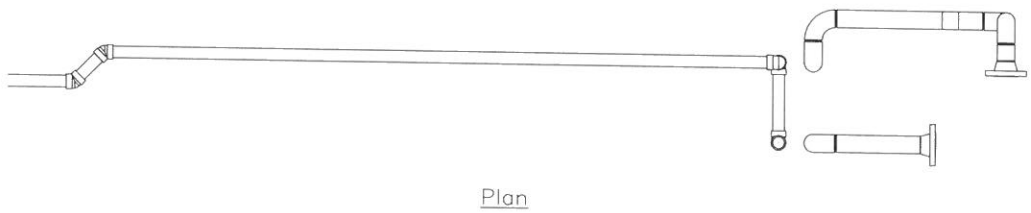

Plan

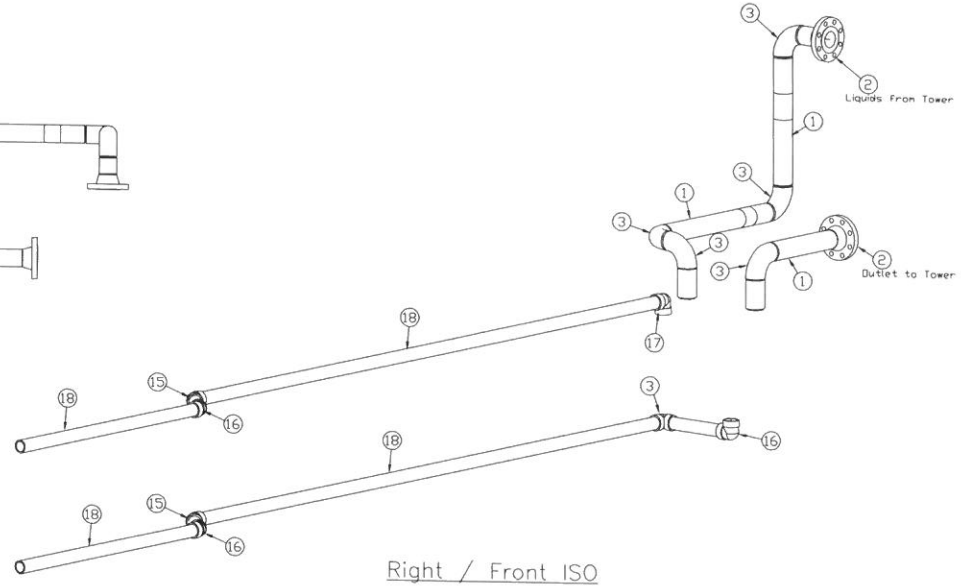

Right / Front ISO

Front Elevation

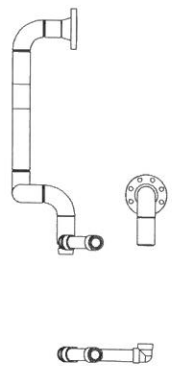

Right Elevation

Bill Of Materials

Item	Desc.	Part #	Quan
1	3" Sch 40 A53 Gr B Pipe		
2	3" 300# RFWN Flange, Sch 40 Bore		
3	3" Sch 40 90° Ell, LR, BW		
4	3" Sch 40 Tee, BW		
5	3"x2" Sch 40 Conc Reducer, BW		
6	2" 300# RFWN Flange		
7	2" 300# Garlock Gasket, 1/8" Thk		
8	2" 300# RFSOC Flange		
9	2" 3000# 90° Ell, Soc		
10	2" 3000# Tee, Soc		
11	2" x 1" 3000# Ins x Soc Reducer		
12	3"x1" 3000# Soc-O-Let		
13	3"x1/2" 3000# Thread-O-Let		
14	3"x 1/2" 3000# Elbowlet		
15	3" Sch 40 45° Ell, BW		
16	3"x2" Sch 40 Reducing Tee, BW		
17	Flow Meter		
18	3" Wafer Check Valve		
19			
20			

Notes:
1.

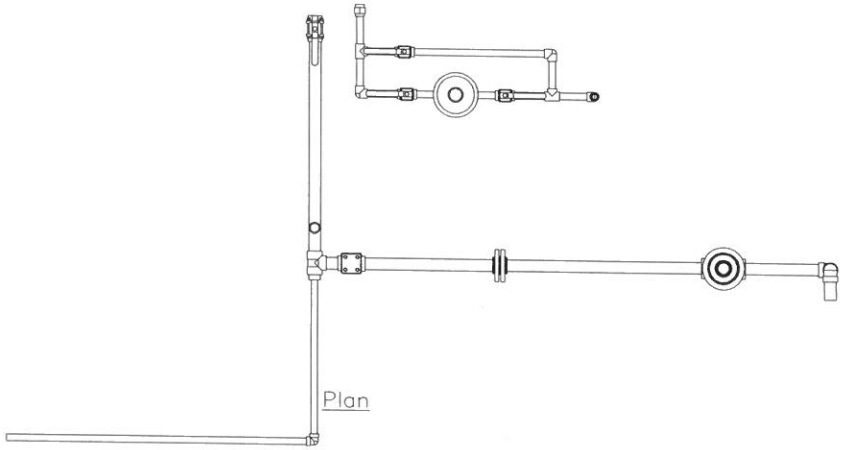

Plan

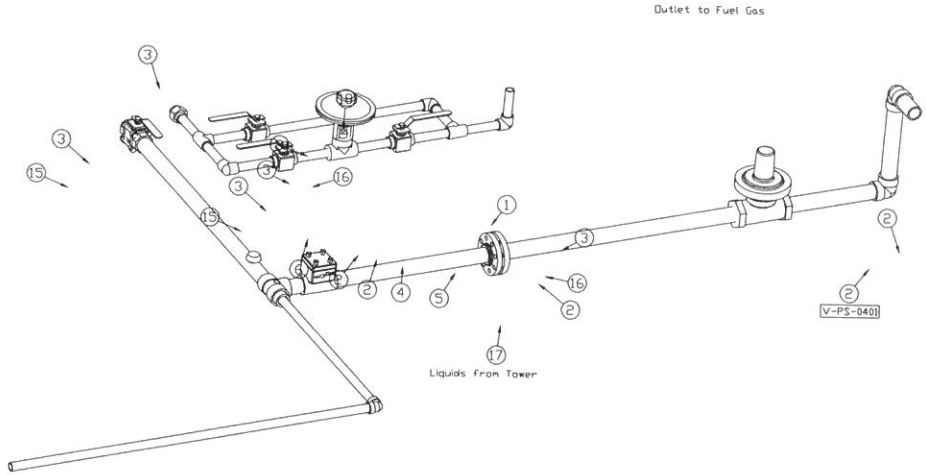

Right / Front ISO

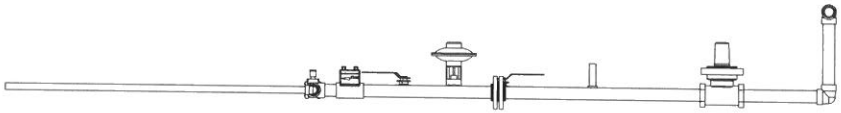

Front Elevation

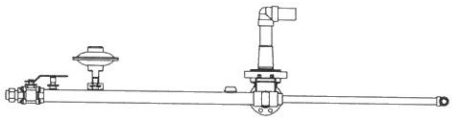

Right Elevation

Bill Of Materials

Item	Desc.	Part #	Quan
1	3" Sch 40 A53 Gr B Pipe		
2	3" 300# RFWN Flange, Sch 40 Bore		
3	3" Sch 40 90° Ell, LR, BW		
4	3" Sch 40 Tee, BW		
5	3"x2" Sch 40 Conc Reducer, BW		
6	2" 300# RFWN Flange		
7	2" 300# Gorlock Gasket, 1/8" Thk		
8	2" 300# RFSOC Flange		
9	2" 3000# 90° Ell, Soc		
10	2" 3000# Tee, Soc		
11	2" x 1" 3000# Ins x Soc Reducer		
12	3"x1" 3000# Soc-O-Let		
13	3"x1/2" 3000# Thread-O-Let		
14	3"x 3/4" 3000# Elbowlet		
15	3" Sch 40 45° Ell, BW		
16	3"x2" Sch 40 Reducing Tee, BW		
17	Flow Meter		
18	3" Wafer Check Valve		
19			
20			

Notes:
1.

VALVES

- Relief Valve
- Backpressure Valve
- Pressure Reducing Regulator with External Pressure Tap
- Regulator Valve
- Globe Valve
- Butterfly Valve
- Ball Valve
- Characterized Ball Valve
- Gate Valve
- Check Valve
- Needle Valve
- Safety Valve – Cable Actuated
- Gas Safety Valve
- Solenoid Valve
- Actuated Ball Valve
- Float Valve
- Ball Valve – Socket Weld
- Ball Valve – Thd x Soc
- Ball Valve – Threaded
- Ball Valve – Compression x Thd
- Ball Valve – Compression Tube
- 3-Way Ball Valve
- 4-Way Valve
- Actuated 3-Way Ball Valve
- 4-Function Valve (Lift Chemical Pump)
- Control Valve
- Control Valve–Motorized
- Cable Actuated Safety Valve

FLOW SYMBOLS

- Orifice Plate
- Strainer
- Totalizing Meter
- Flow Meter
- Pressure Switch
- Flange
- Union
- Concentric Reducer
- Eccentric Reducer
- Plug
- Spec A | Spec B — Specification Change
- Flexible Hose
- Flow Meter

LINE TYPES

- Piping
- Tubing
- Instrument Air Supply Line (Air — Air)
- Instrument Air Control Line (Air — Air — Air — Air)
- Electrical
- Future
- Insulated Line (Cold)
- Insulated Line (Hot)
- Site Limits

BUBBLES

- XX — MAIN PANEL SOFTWARE FUNCTION
- XX XXX — LOCAL PANEL SOFTWARE FUNCTION
- XX XXX — MAIN PANEL SOFTWARE FUNCTION OPERATOR VISIBLE
- XX XXX — LOCALLY MOUNTED INSTRUMENT
- XX XXX — FRONT PANEL MOUNTED INSTRUMENT
- XX XXX — BACK / INSIDE PANEL MOUNTED INSTRUMENT
- XX XXX — LOCAL FRONT PANEL MOUNTED INSTRUMENT
- XX XXX — LOCAL BACK PANEL MOUNTED INSTRUMENT
- HEAT TRACED INSTRUMENT
- XX XXX / XX XXX — COMBINATION INSTRUMENT
- PC — COMPUTER
- ESD — EMERGENCY SHUTDOWN
- S — PC KEYBOARD FUNCTION
- I — LOGIC ELECTRICAL INTERLOCK
- R — MANUAL RESET
- RTU — REMOTE TERMINAL UNIT
- XX # — TIE IN TO EXISTING PIPING OR PIPING BY OTHERS
- SPECIALITY ITEM
- PLC — PLC INPUT/OUTPUT
- FM # — ELECTRONIC FLOW MEASUREMENT

PIPE LINE NUMBERING STANDARD

L-###-##-##/##

- LINE SIZE
- SERVICE DESIGNATION
- LINE NUMBER
- HEAT TRACING TYPE
- INSULATION THICKNESS & TYPE
- PIPE SPECIFICATION SCHEDULE, MATERIAL

Service		Schedule		Material		Insulation Type		Trace Type	
AA	Ambient Air	A	Pipe: Sch 10	A	Alloy 20	C	Cold	ST	Steam
CM	Compressor Motor	B	Pipe: Sch 20	B	Carbon Steel	H	Hot	ET	Electric
CO	Compressor Oil	C	Pipe: Sch 40	C	Hastalloy	P	Personnel	MT	Media Trace i.e., Glycol, Hot Oil, Hot Water
MS	Methanol Supply	D	Pipe: Sch 80	D	PVC	S	Sweat		
PG	Pipeline Gas	E	Pipe: Sch 160	E	CPVC				
PL	Produced Liquid	F	Tubing: .035 Wall	F	Polypropylene				
RR	Refrigerant Return	G	Tubing: .049 Wall	G	Polyethylene				
RS	Refrigerant Supply	H	Tubing: .062 Wall	H	304 Stainless Steel				
		K	Copper: Class K	I	316 Stainless Steel				
		L	Copper: Class L	J	Copper				
		M	Copper: Class M	K	ACR Copper				

VALVE / INSTRUMENTATION / EQUIPMENT NUMBERING STANDARD

###-###-####

- ITEM DESCRIPTION
- SERVICE
- ITEM #
- LOCATION (Line #, Vessel or Equip #)

Item Description		Service	Piping Location
BPV	Back Pressure Valve	*Same as Piping Service*	Line Number or Vessel Number
CD	Condenser		
E	Economizer		
F	Filter		
FI	Flow Indicator		
FM	Flow Meter		
HPS	High Pressure Switch		
LC	Level Controller		
LI	Level Indicator		
LLS	Low Level Switch		
LPS	Low Pressure Switch		
LR	Liquid Receiver		
LT	Level Transmitter		
OP	Orifice Plate		
OS	Oil Seperator		
P	Pump		
PC	Pressure Controller		
PI	Pressure Indicator		
PLC	Programmable Logic Controller		
PRV	Pressure Regulating Valve		
PSV	Pressure Safety Valve		
PT	Pressure Transmitter		
S	Strainer		
SA	Suction Accumulator		
SHC	Super Heat Controller		
SSV	Safety Shutoff Valve		
SV	Solenoid Valve		
TT	Temperature Transmitter		
TC	Temperature Controller		
TCV	Temperature Control Valve		
V	Valve		

REV.	DESCRIPTION	DATE
0	For Approval	09/19/14

Recapture Solutions, Inc.
1-3 MMCFD Gas / Liquids Plant

GSI Job #2053
CMWS Job #1419

DR. BY: TC CHK'D BY: JH

TITLE: Flow Diagram Symbols Legend

DATE: 09/19/14 SCALE: NONE SHEET: 1 of 1

DWG. NO.: 1419-20-PID-11 REV.: 0

GLYCOL SPECIALIST INC.
14 Lakeside Lane Denver, CO 80212
Ph 303-477-6999 Fax 303-458-7050

THIS DRAWING IN ALL PARTICULARS IS OUR PROPERTY. ALL RIGHTS OF DESIGN, INVENTION OR USE ARE RESERVED.