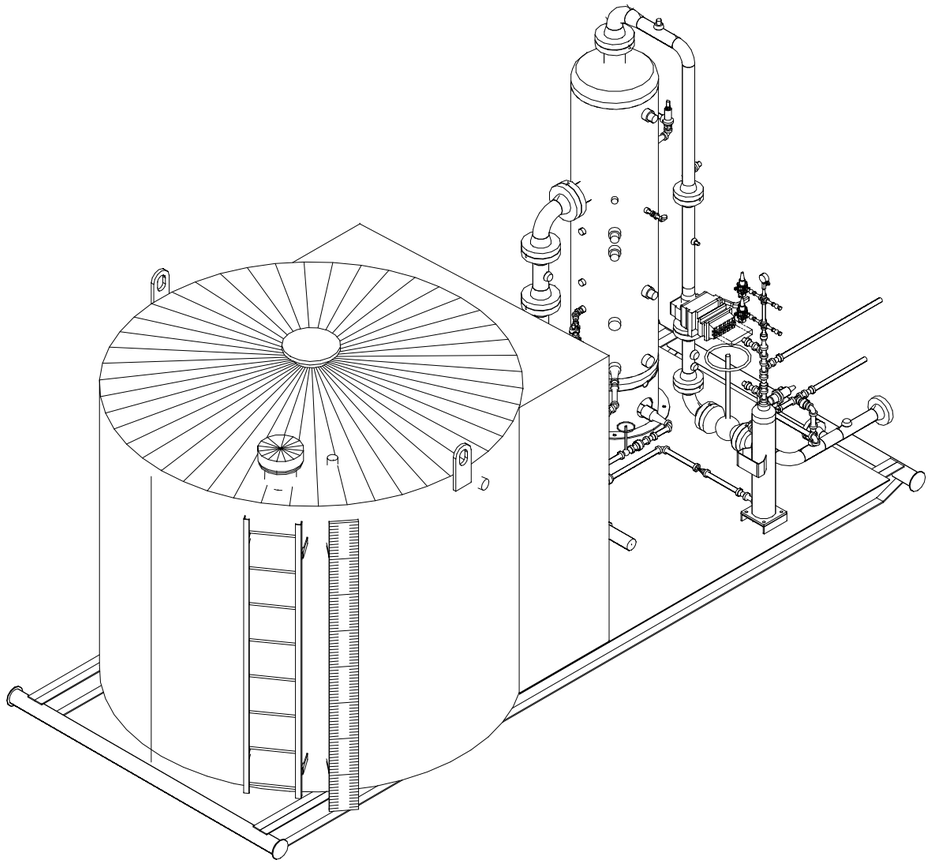

SW ISO VIEW
SCALE 1:40

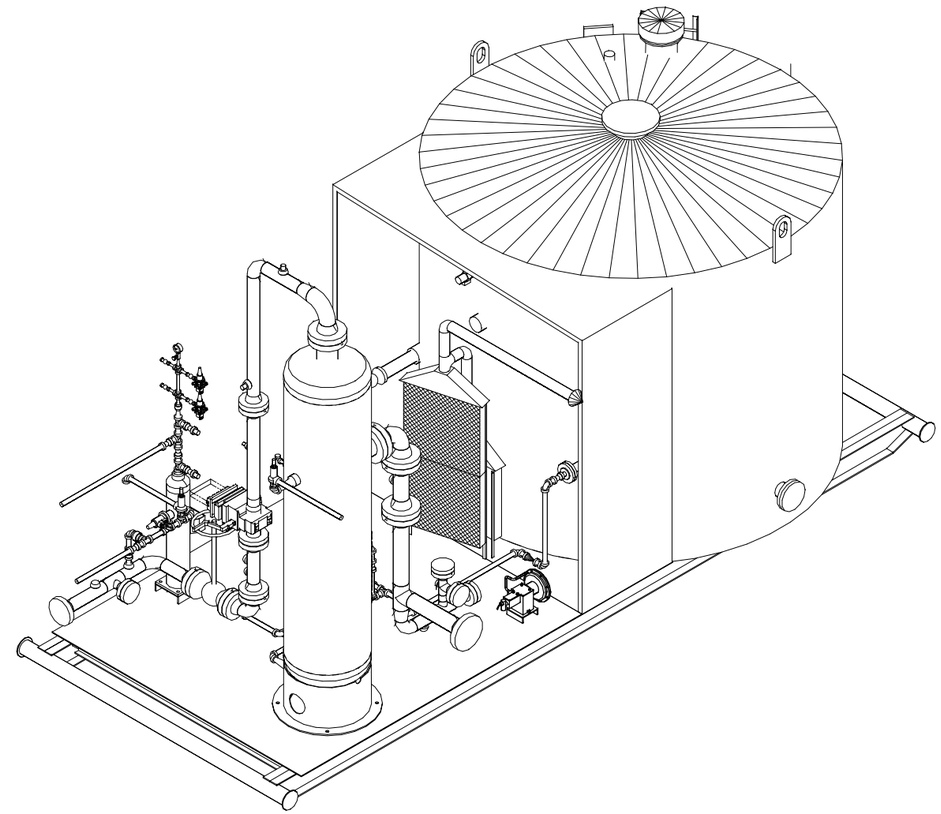

NE ISO VIEW
SCALE 1:40

DATE	REV	DESCRIPTION	DWN	CHKD	APPVD
19-09-27	0	AS BUILT	WST	AV	AV

CLIENT
VAN HAWK

LSD.

3 PHASE SEPARATOR (24" x 7'-6")
DRESSED 3 PHASE

GENERAL ARRANGEMENT

DATE:	2019-09-27	VAN HAWK PROJECT#	A523189 (4-1153)
SCALE:	SEE DWG		
DRAWN BY:	WST	DRAWING NO.	A523189-B-01 REV. 0
CHECKED BY:	AV		
APPROVED BY:	AV	SHEET	3 OF 3