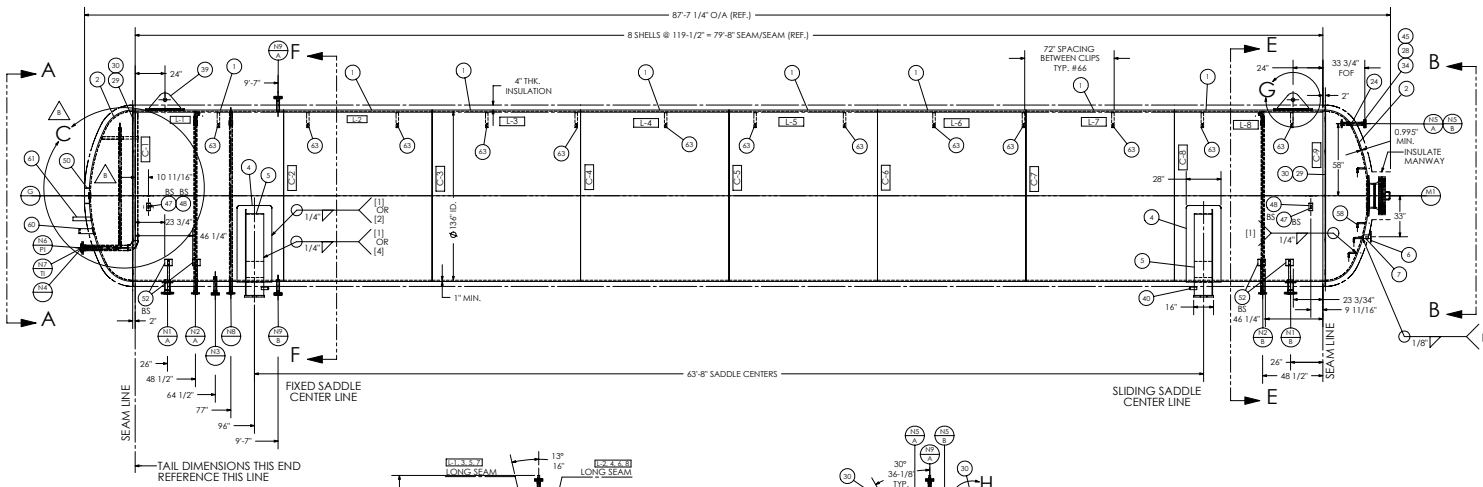

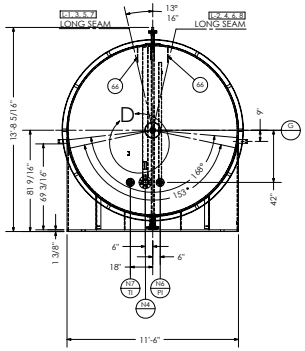

SECTION A-A
SCALE 1 : 50

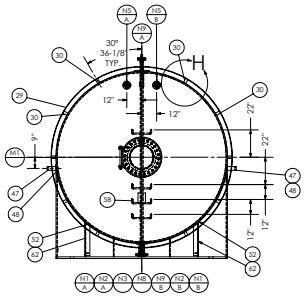

SECTION B-B
SCALE 1 : 50

ITEM	LOCATION	PART NO	QTY	U/M	DESCRIPTION	COMMENT
1	SHELL	69624	8	EA	PL 1.00" X 120" X 432.5" SA516-70N IMP -40F	119-1/2" LG
2	HEAD FRONT	69641	2	EA	HD 2:1 SE 136 ID X .995 MIN 25F SA516-70N IMP, -40 F	-
3	HEAD MANWAY			EA	HD 2:1 SE 136 ID X .995 MIN 25F SA516-70N IMP, -40 F	-
4	SADDLE PAD	61289	78.5	F2	PL .500" SA516-70N IMPACT -50F	2 PCS 16'-9 5/8" X 28"
5	SADDLE	67850	1	PR	SADDLE DETAIL FOR 136"ID TANK, CONT. ANG. 155DEG	DWG P070042
6	DATA PLATE	69002	1	EA	PL DATA UNITS MET/ IMP EXT. VERSION W/MAXEWP LINE	DWG 2005-0613A
7	DATA PLATE	65229	1	EA	BRKT DATA PL (EXTENDED VERSION) EXTRA LONG	DWG 9905-09A
8	M1	39115	1	EA	FLG 20 CL300 RFWN SCH60 SA350 LF2 CL1	-
9	M1 BLIND	56121	1	EA	FLG BLIND 20 CL300 RF SA350-LF2 CL1 (DRILL & TAP 1" NPT HOLE)	-
10	M1	56118	1	EA	GASKET FLEXITALIC 20" RF CL300 304-SS	-
11	M1	62499	24	EA	STUD 1-1/4NC X 8-1/4LG B7P1 SA193B7M	-
12	M1	62864	48	EA	NUT HEX 1-1/4" SA194-2HM	-
13	M1	39437	6.0	IN	PIPE 20" SMLS SCH 60 SA333-GR6 (BOE)	1 PCS 6" LG
14	M1 REPAD	39410	4.5	F2	PL 1" SA516-70N -50F IMP	1 PCS 20-1/8" X 32" OD
15	N1A/B, N4	58043	3	EA	FLG 4 CL300 RFWN XH BORE SA350 LF2 CL1	-
16	N1A/B	58058	1.4	FT	PIPE 4" XH SMLS SA333-GR6	2 PCS 8" LG
17	N1A/B, N4 REPAD	39410	0.9	F2	PL 1" SA516-70N -50F IMP	3 PCS 4-5/8" X 9" OD
18	M1 HINGE	56123	1	F2	HINGE MANWAY 20" CL300 RF	P070050C
19	N2A/B,N3,N6, N7,N8,N9A/B	66968	8	EA	FLG 2 CL300 RFWN XH SA350-LF2 CL1	-
20	N9A/B	63391	1.5	FT	PIPE 2" XH SMLS SA333-GR6 (BOE/POE)	2 PCS 8-1/8" LGG
21	N2A/B, N6	63392	3	EA	ELBOW WELD 90 LR 2 XH SA420 WPL6	-
22	N2A/B, N8	51554	1.0	FT	PIPE 2-1/2" STD SMLS SA 106B (PBE)	3 PCS 4" LG
23	N2A/B, N8	51411	3.7	FT	BAR FLAT 1/4" C 2" 44W	3 PCS 14-1/2" LG
24	N5A/B	56112	2.8	FT	PIPE 2" SCH160 SMLS SA333-GR6 (BOE/POE)	2 PCS 14" LG
25	N4	51411	2.5	FT	BAR FLAT 1/4" X 2" 44W	1 PCS 30" LG
26	N6	51411	1.3	FT	BAR FLAT 1/4" X 2" 44W	1 PCS 15" LG
27	G	68688	1	EA	FTG ADAPT 8 BOLT FLOAT GAUGE SA516-70 IMP-50	DWG 2004-1009A
28	N5A/B	64496	2	EA	FLG 2 CL300 RFSO SA350-LF2 CL1	-
29	INSULATION	65963	76.5	FT	BAR RND 3/8" 44W (ROLL TO 146" OD)	2 PCS 38'-1 1/2" LG
30	INSULATION	51411	7.3	FT	BAR FLAT 1/4" X 2" 44W	24 PCS 3-5/8" LG
31	N4	58058	2.9	FT	PIPE 4" XH SMLS SA333-GR6 (BBE)	1 PCS 34" LG
32	N4	55889	1	EA	ELBOW WELD 90 LR 4 XH SA234 WPB	-
33	N4	58058	7.3	FT	PIPE 4" XH SMLS SA333-GR6 (BOE/POE)	1 PCS 102-5/8" LG
34	N5A/B	56103	2	EA	FLG 2 CL300 RFWN SCH160 SA350-LF2 CL1	-
35	N6	64244	1	EA	THREDCLET 1/2 3000# X 3/4-8 RUN SA350-LF2	-
36	N7	63391	1.5	FT	PIPE 2" XH SMLS SA333-GR6 (BOE/POE)	1 PCS 18" LG
37	N7	70231	1	EA	CAP WELD 2" XH SA420-WPL6	-
38	N8	63391	12.0	FT	PIPE 2" XH SMLS SA333-GR6 (BOE/POE)	1 PCS 11'-11 1/2" LG
39	LFT LUG	69830	2	EA	LIFT LUG & PAD F/63,000 USWG 136" ID CO2 STOR TANK	P070003A
40	GROUND LUG	63343	2	EA	GROUND LUG DETAIL	P070002A
41						-
42	N3,N6,N7,N5,9A/B	58648	112	EA	NUT HEX 5/8" NC SA194-2HM	-
43	N3,N6,N7,N5,9A/B	64497	56	EA	STUD 5/8NC X 3-1/2 LG SA193-B7M	-
44	N3,N6,N7,N5,9A/B	54687	7	EA	GASKET FLEXITALIC 2" RF CL300 304-SS	-
45	N3,N6,N7,N5,9A/B	58776	7	EA	FLG BLIND 2 CL300 RF SA350-LF2 CL1	-
46						-
47	PIPE CLIP	51422	2.4	FT	BAR FLAT 3/8" X 3" 44W	4 PCS 6-7/8" LG
48	PIPE CLIP PAD	59206	0.6	F2	PL .375" SA516-70N	4 PCS 3" X 6"
49	N6	63391	2.1	FT	PIPE 2" XH SMLS SA333-GR6 (BBE)	1 PCS 25" LG
50	INSULATION	59204	4.0	IN	PIPE 12" STD SMLS SA333-GR6	1 PCS 4" LG
51	N2A/B	63391	23.0	FT	PIPE 2" XH SMLS SA333-GR6 (BBE)	2 PCS 11'-7" LG
52	PIPE CLIP PADS	59206	2.7	F2	PL .375" SA516-70N	8 PCS 8" X 6"
53	N1A/B,N3,N7	INTO JOB	4	EA	NAME PLATE LAMACOID "LIQUID PHASE"	-
54	N2A/B,N4,N8	INTO JOB	4	EA	NAME PLATE LAMACOID "GAS PHASE"	-
55	N6	INTO JOB	1	EA	NAME PLATE LAMACOID "FULL TRICOCK 95%"	-
56	N3	63391	1.0	FT	PIPE 2" XH SMLS SA333-GR6 (BOE/POE)	1 PCS 11-1/8" LG
57	N6	63391	8.0	FT	PIPE 2" XH SMLS SA333-GR6 (BOE/POE)	1 PCS 93-5/8" LG
58	M1	59132	4	EA	INTERNAL RUNG	P070001A
59	PRV MAN. PAD	59206	0.2	F2	PL .375" SA516-70N	1 PCS 3" X 6"
60	PRV MAN. CLIP	51427	1.1	FT	BAR FLAT 3/8" X 4" 44W	1 PCS 11-3/4" LG
61	PRV MAN. CLIP	51473	1.3	FT	CHANNEL 3" 4.1 #/FT 44W	1 PCS 14-3/4" LG
62	PIPE CLIP	51475	18.0	FT	CHANNEL 4" X 5.4 #/FT 44W	8 PCS 27" LG
63	N5A/B COIL CLIP	51411	26.0	FT	BAR FLAT 1/4" X 2" 44W	26 PCS 12" LG

SHOP NOTES:

1) BOLT HOLES SHALL STRADDLE NATURAL CENTRE LINE, EXCEPT AS NOTED.
2) FLANGE GASKET SURFACES SHALL BE PROTECTED FROM WELD SPATTER.
3) ALL INSIDE CONNECTIONS SHALL BE ROUNDED TO 1/8" RADIUS MIN.
4) NOZZLE REPADS SHALL HAVE A 1/4" NPT DIA. WEEP HOLE, 3/4" FROM EDGE AT LOWEST POINT OF PAD. ON PWHT VESSELS, ALL PADS, INCLUDING STRUCTURAL ATTACHMENT PADS, SHALL HAVE WEEP HOLES.
5) SERVICE BOLTS & GASKETS SHALL NOT BE USED FOR HYDROTEST.
6) AFTER FINAL HYDROTEST, VESSEL SHALL BE COMPLETELY DRAINED & DRIED PRIOR TO COVERING AND PROTECTING ALL OPENINGS.
7) VESSEL SHALL BE SHIPPED WITH SERVICE BLINDS, GASKETS & BOLTING IN PLACE.
8) NO EXPOSED OPENINGS ARE ALLOWED WHILE IN SERVICE OR TRANSIT. ALL FLANGE FACES SHALL BE PROTECTED. PIT STEEL PLUGS IN THREADED CONNECTIONS AS REQUIRED.
9) ALL INTERNAL NOZZLE PROJECTIONS SHALL BE MEASURED ALONG SHORTEST SIDE UNLESS OTHERWISE SPECIFIED.
10) CONTOUR PADS SHALL HAVE 1" RADIUS ON CORNERS.
11) CONTOUR PADS SHALL BE WELDED TO TANK PRIOR TO WELDING OF SADDLE, (FOR EASE OF MANUFACTURING).
12) FOR TACK WELDING USE PROCEDURE WPS 609.2-S-170.
13) AT ROLLING, MARK REFERENCE LINE ON 2 END CANS 2" FROM EDGE.

INSPECTION NOTES:

1) PRODUCTION IMPACT TEST REQ'D AT -40°F.
2) AIR TEST REQUIRED FOR ALL NOZZLE REPADS @ 25 PSI.

NOZZLE MK #	SERVICE	No REQD	SIZE	RATING	TYPE	BORE	EXTERNAL PROJ.	MINIMUM INTERNAL PROJ. (REF)	REINFORCING PAD THICKNESS	REINFORCING PAD OD.	WELD DETAILS	WELD SIZES A	B	C	D	E	F	G	REMARKS
N1A/B	LIQUID INLET / LIQUID OUTLET	2	4"	CL300	RFWN	XH	10"	0"	1.00	9.00	IV, VI	3/8"	.	FULL	9/16"	FULL	.	.	ITEMS #15, 16, 17, 53
N2A/B	VAPOR - CO2 C/W RISER	2	2"	CL300	RFWN	XH	10"	SEE VIEW	-	-	I, VI	1/4"	1/4"	FULL	.	.	.	.	ITEMS #19, 21, 22, 23, 46, 51, 54
N3	LIQUID PHASE TO INSTRUMENT W/BLIND	1	2"	CL300	RFWN	XH	10"	3"	-	-	I, VI	1/4"	1/4"	FULL	.	.	.	.	ITEMS #19, 42-45, 53, 56
N4	RELIEF (REGO)	1	4"	CL300	RFWN	XH	SEE VIEW	SEE VIEW	1.00	9.00	III, VI	3/8"	1/4"	FULL	5/8"	FULL	.	.	ITEMS #15, 17, 25, 31, 32, 33, 47, 48, 54
N5A/B	REFRIDGERATION COIL W/ BLIND	2	2"	CL300	RFWN	SCH160	SEE VIEW	1"	-	-	I, VI	3/8"	1/4"	FULL	.	.	.	.	ITEMS #24, 28, 34, 42-45
N6	FULL TRICOCK 95% W/BLIND	1	2"	CL300	RFWN	XH	SEE VIEW	SEE VIEW	-	-	I, VI	1/4"	1/4"	FULL	.	.	.	.	ITEMS #19, 21, 26, 35, 42-45, 49, 55, 57
N7	THERMOWELL W/BLIND	1	2"	CL300	RFWN	XH	SEE VIEW	1-1/2"	-	-	I, VI	1/4"	1/4"	FULL	.	.	.	.	ITEMS #19, 36, 37, 42-45, 53
N8	VAPOR PHASE TO INSTRUMENT	1	2"	CL300	RFWN	XH	10"	SEE VIEW	-	-	I, VI	1/4"	1/4"	FULL	.	.	.	.	ITEMS #19, 22, 23, 38
N9A/B	VAPOR / LIQUID PHASE W/BLIND	2	2"	CL300	RFWN	XH	10"	0"	-	-	II, VI	1/4"	.	FULL	.	.	.	.	ITEMS #19, 20
M1	MANWAY W/ BLIND/ROTO GA	1	20"	CL300	RFWN	SCH60	10-5/8"	0"	1.00	32.00	IV, VI	3/8"	.	FULL	9/16"	FULL	.	.	ITEMS #8, 9, 10, 11, 12, 13, 14, 18
G	FLOAT GAUGE ADAPTOR	1	2-1/2"	DWG 2004-1009A			3/4"	0"	-	-	II	3/8"	.	FULL	.	.	.	.	ITEMS #27
.		.	.	.	.	.	.	.	.	.	.	.	.	.	.	.	.	.	.

DESIGN DATA - ENGLISH (METRIC) UNITS

ASME SEC. VIII DIV 1, 2007 EDITION, NO ADDENDA		SYMBOL UW12 (a)	
DESIGN INT: 285 Psi (1965 kPa) EXT: . Psi (kPa)		DIAMETER:	136" ID (3454.4 mm)
MAWP INT: 285 Psi (1965 kPa) EXT: . Psi (kPa)		LENGTH O/A:	87' 7-5/16" (26,703 mm)
DESIGN TEMP: - INT & EXT: 150°F (66°C)		CAPACITY:	8448 FT^3 (239.2 M^3)
MDMT: -40°F @ 285 Psi (-40°C @ 1965 kPa)		SURFACE AREA:	3128 FT^2 (290.6 M^2)
XRAY SHELL LONG: FULL CIRC: UW-11(a)(5)(b)		HEAD TYPE:	2:1 SE
XRAY HEAD LONG: SMLS CIRC: UW-11(a)(5)(b)		HEAD MATERIAL:	SA516-70N
JOINT EFF. - SHELL LONG: 1.0 CIRC: 0.7		HEAD THICKNESS:	0.995" MIN (25.3 mm)
JOINT EFF. - HEAD LONG: 1.0 CIRC: 0.7		HEAD CORROSION ALLOWANCE:	NIL" (NIL mm)
STRESS RELIEVED: NO		SHELL MATERIAL:	SA516-70N
HYDRO TEST NEW & COLD: 371 Psi (2558 kPa)		SHELL THICKNESS:	1.0" (25.4 mm)
LIMITED BY: SE HEAD		SHELL CORROSION ALLOWANCE:	NIL" (NIL mm)
EST. SHIPPING WEIGHT: 138,605 LBS (62,870 KG)		STUDS:	SA193-B7M
EST. HYDRO TEST WEIGHT: 665,605 LBS (301,913 KG)		NUTS:	SA194-2HM
SANDBLAST: SSPC-SP6		MW GASKETS:	GASKET FLEXITALIC RF CL300 304-SS
PRIMER: PRIMER DEVOE CATHA COAT 302		FLANGES:	SA350-LF2 PIPE: SA333 GR6
PAINT: UNINSULATED NOZZLES CLOVERDALE POLYURETHANE DTM		SUPPORT MTL:	SA516-70
INSULATION: 4" URETH BRD INSUL - 0.020" CLAD'G.		REINFORCING MTL:	SA516-70N IMP-40 DEG F
CRN: U0249.231		REG DRAWING:	V06001D, REV.A

CERTIFIED BY MaXfield Inc.
CROSSFIELD, CANADA

MAWP	DIS	PSIG AT	150	°F
	1965	kPa@ AT	66	°C
MAEWP	N/A	PSIG AT	N/A	°F
	N/A	kPa@ AT	N/A	°C
MDMT	-40	°F AT	285	PSIG
	-40	°C AT	1965	kPa

SER. NO.: BUILT 2005
C.R.N.: U0249.231
VESSEL: 63,000 USWG CO2 STORAGE VESSEL

I.D.	136	IN	3454.4	mm
LG.	87	FT 7 1/16 IN	26,703	mm
SHL.	1.00	IN.(25.4	mm)SA 516-70N	
HDS.	0.995	IN.(25.3	mm)SA 516-70N	
C.A.	NIL	IN.(	NIL	mm)
VOL.	8448	CU.FT.(	239.2	CU.m)

DETAIL VIII

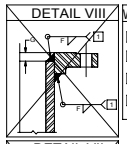

DETAIL VII

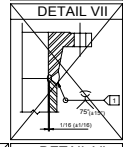

WELD PROCEDURES	
1	WP 609.2-S-170 (S.M.A.W.)
2	WP 609.2-S-170 (S.A.W.)
3	WP 609.2-S-159 (G.M.A.W., S.M.A.W.)
4	WP 609.2-S-169 (F.C.A.W.)

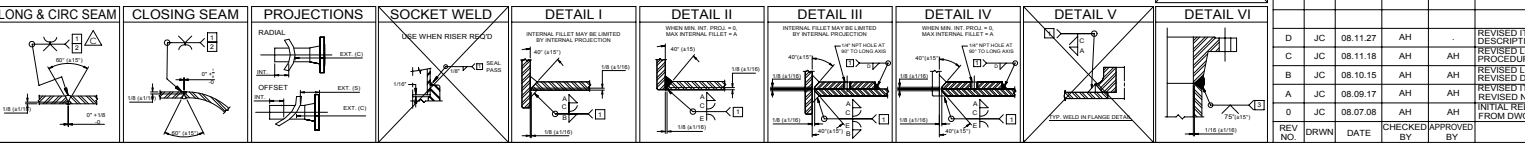

REV NO.	DRWN	DATE	CHECKED BY	APPROVED BY	DESCRIPTION
D	JC	08.11.27	AH		REVISED ITEM #1, 2, 3, 15 & 16. DESCRIPTIONS FOR HEADS & PLATE.
C	JC	08.11.18	AH	AH	REVISED LONG & CIRC SEAM WELD PROCEDURE.
B	JC	08.10.15	AH	AH	REVISED LENGTH ITEMS #57, N6 RISER. REVISED DETAIL "C".
A	JC	08.09.17	AH	AH	REVISED ITEMS #24, 27, 34, 47, 48 & 62. REVISED N5A/B NOZZLE BORE.
0	JC	08.07.08	AH	AH	INITIAL RELEASE FOR REVIEW, ORIGINATED FROM DWG V06001D-RB.

MaXfield Inc.

THIS DRAWING IS CONFIDENTIAL IN NATURE AND IS THE EXCLUSIVE PROPERTY OF MAXFIELD INC., CROSSFIELD ALBERTA. IT MAY NOT BE REPRODUCED IN ANY WAY WITHOUT THE WRITTEN PERMISSION OF MAXFIELD INC.

63,000 USWG, 136" ID
79'-8" S/S CO2 STORAGE VESSEL

THIRD ANGLE PROJECTION
SCALE: 1:50
SEE DRAWING 2002-070TD FOR APPLICABLE TOLERANCES UNLESS OTHERWISE STATED
P/N - 70699
JOB: 31-2209, 31-2210
DRAWING No. V08142D
SHEET 1 OF 2
REV D