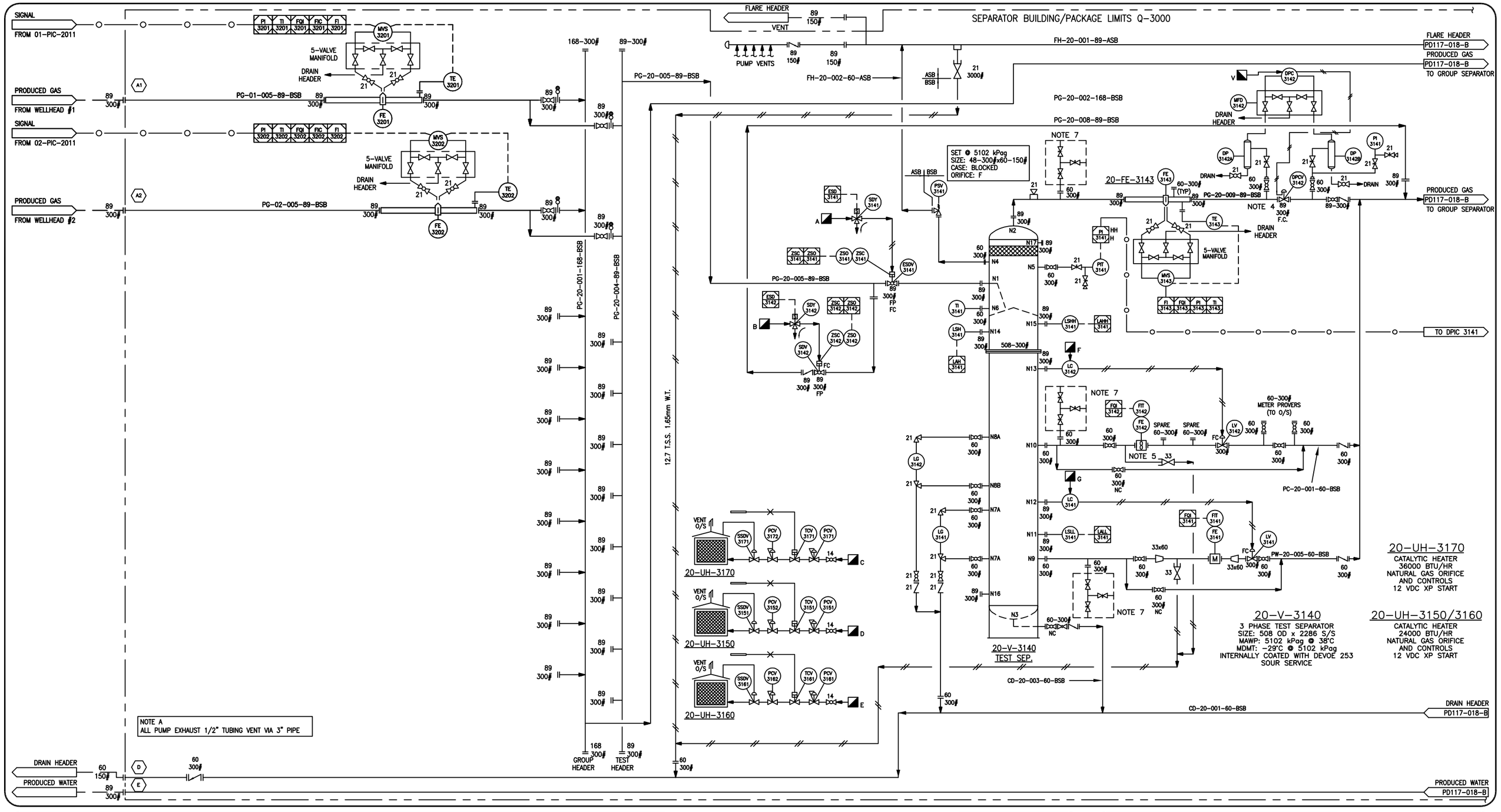

GENERAL NOTES:-

1. SEPARATORS TO BE FULLY INTERNALLY COATED.
2. CHEMICAL TANKS SUPPLIED BY ULTRAFAB.
3. PIPING SHALL BE PER EQUINOX SPEC. VENDOR TO SPECIFY MODEL NUMBERS FOR VALVES WITH SUITABLE CHLORIDE-RESISTANT MATERIAL.
4. ALL INSTRUMENT TAGS ON THIS DRAWING ARE PREFIXED '20'.
5. 20# UPSTREAM AND 5# DOWNSTREAM OF METER REQUIRED PER OGC FOR LIQUID & GAS METER.
6. FUEL GAS PURGE FOR DRAIN HEADER.
7. SAMPLE QUILL PROVIDED BY EQUINOX, INSTALLED BY ULTRAFAB.
8. ALL INSTRUMENTS TO BE VENTED OUTSIDE VIA A 1/2" TUBING HEADER, 1 METER ABOVE EAVE HEIGHT.
9. TUBE FITTING TO BE SWAGELOK.
10. TUBE FITTING TO BE 316SS SEAMLESS.
11. DISCHARGE TUBING TO THE WELLHEAD TO BE 1/2" 0.083" WT.
12. ALL OTHER 1/2" TUBING TO BE 0.049" WT.
13. ALL INSTRUMENT GAS & FUEL GAS TUBING TO BE 3/8" 0.035" WT.

REV.	DATE	DESCRIPTION	DRAWN	CHECK	DESIGN	APPR.
1	15-MAY-12	AS BUILT	DZ	MH	LM	
0	01-SEP-11	ISSUED FOR CONSTRUCTION	DZ		LM	

ULTRAFAB INDUSTRIES LTD.

CLIENT. MURPHY c/o EQUINOX ENGINEERING

TITLE. SEPARATOR PACKAGE SKID (20-PK-3000)
SHEET 1 OF 3 - P&ID

SCALE.	DRAWING No. & Computer File #	DATE	TIME
N.T.S.	PD117-018-A	05-25-11	14:21

FILE:- Projects 2011/117-000/117-018/Drawings/PD117-018-A

THIS DRAWING AND THE DESIGN IT COVERS ARE CONFIDENTIAL AND THE PROPERTY OF ULTRAFAB INDUSTRIES LTD., AND SHALL NOT BE DISCLOSED TO OTHERS OR REPRODUCED IN ANY MANNER OR USED FOR ANY PURPOSE WHATSOEVER EXCEPT BY WRITTEN CONSENT OF ULTRAFAB.

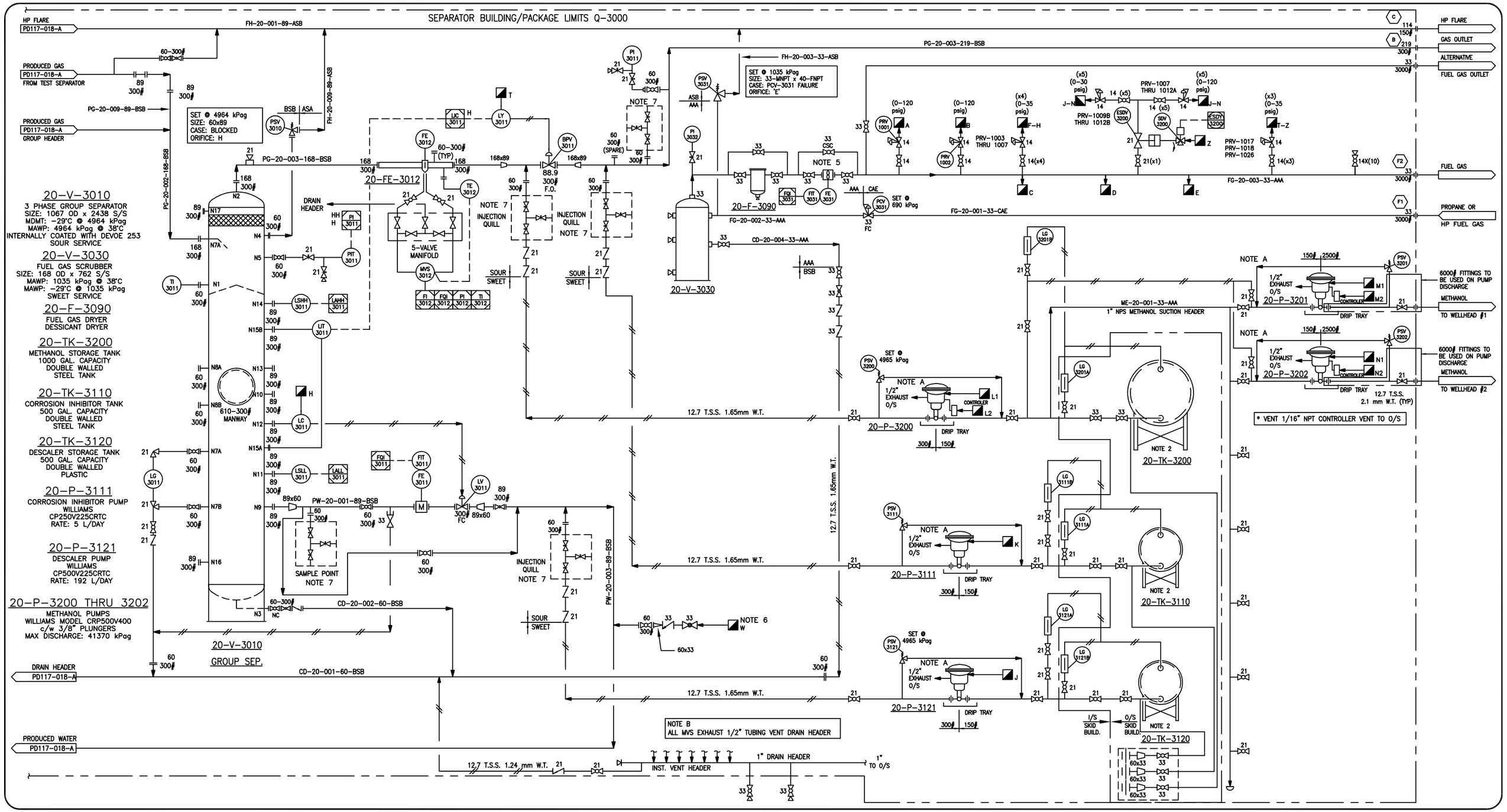

GENERAL NOTES:-

REV.	DATE	DESCRIPTION	DRAWN	CHECK	DESIGN	APPR.
1	15-MAY-12	AS BUILT	DZ	MH	LM	
0	01-SEP-11	ISSUED FOR CONSTRUCTION	DZ		LM	

ULTRAFAB INDUSTRIES LTD.

CLIENT. MURPHY OIL c/o EQUINOX ENGINEERING

TITLE. SEPARATOR PACKAGE SKID (20-PK-3000)
SHEET 2 OF 3 - P&ID

SCALE.	DRAWING No. & Computer File #	DATE	TIME
N.T.S.	PD117-018-B	05-25-11	14:21

FILE:- Projects 2011/117-000/117-018/Drawings/PD117-018-B

THIS DRAWING AND THE DESIGN IT COVERS ARE CONFIDENTIAL AND THE PROPERTY OF ULTRAFAB INDUSTRIES LTD., AND SHALL NOT BE DISCLOSED TO OTHERS OR REPRODUCED IN ANY MANNER OR USED FOR ANY PURPOSE WHATSOEVER EXCEPT BY WRITTEN CONSENT OF ULTRAFAB.

Tag #	Item	P&ID	Model #	P/N
MVS-3201	Multivariable Transmitter 0 - 250" W.C., 0 - 3600 psig	PD117-018-A	MVS205E (RSE2DH)	TR-1182
TE-3201	2"- 300# ANSI RTD c/w 2"- 300# RF Flanged Thermowell	PD117-018-A		
MVS-3202	Multivariable Transmitter 0 - 250" W.C., 0 - 3600 psig	PD117-018-A	MVS205E (RSE2DH)	TR-1182
TE-3202	2"- 300# ANSI RTD c/w 2"- 300# RF Flanged Thermowell	PD117-018-A		
FE-3201	3"- 300# ANSI Canalta Senior Meter Run	PD117-018-A		MR-1209
FE-3202	3"- 300# ANSI Canalta Senior Meter Run	PD117-018-A		MR-1209
SDV-3142	3"- 300# ANSI RF FC On/Off Valve	PD117-018-A	370D-4 37YRF37 ES0350.U2A04A.27K2	VA-1615
ZSC/ZSO-3142	Positioner Switch	PD117-018-A	DXP-L21GNEB	
SDY-3142	ASCO 24 Volt Solenoid	PD117-018-A	EF8314G301-24	
ESDV-3141	3"- 300# ANSI RF FP FC ESDV	PD117-018-A	370D-4 37YRF37 ES0350.U2A04A.27K2	VA-1615
ZSC/ZSO-3141	Postioner Switch	PD117-018-A	DXP-L21GNEB	
SDY-3141	ASCO 24 Volt Solenoid	PD117-018-A	EF8314G301-24	
PSV-3141	Farris 1 1/2"- 300# RF x 2"- 150# RF "F" Orifice PSV	PD117-018-A	26FA12-120/S7	VA-1609
PIT-3141	Rosemount Pressure Transmitter	PD117-018-A	2088G3S22A1B4M5C6	TR-1178
TI-3141	Wika Tempreature Gauge c/w Thermowell	PD117-018-A	TBA	GG-1242/GG-1243
LSH-3141	2"- SOR Electric Level Switch (Nace)	PD117-018-A	1510B-G2A-C-W9-ES-CSCV	CO-1138
LSHH-3141	2"- SOR Electric Level Switch (Nace)	PD117-018-A	1510B-G2A-C-W9-ES-CSCV	CO-1138
LC-3142	2"- Fisher L2 Level Controller	PD117-018-A	L2	CO-1090
FE-3142	2"- 300# ANSI Nuflo Turbine 7/8" Orifice	PD117-018-A	9A-100007810B	MR-1212
FIT-3142	MC-III Totalizer	PD117-018-A	9A-50179024	MR-1166
LV-3142	2"- 300# ANSI Fisher D4 Control Valve with 1/4" Trim	PD117-018-A	D4	VA-1611
LG-3142	Quest-tech Reflective	PD117-018-A	91RM	GG-1138/VA-1318
LG-3141	Quest-tech Transparent	PD117-018-A	91TH	GG-1155/VA-1318
LC-3141	2"- Fisher L2 Level Controller	PD117-018-A	L2	CO-1090
FE-3141	1"- 300# ANSI Rosemount 8705 Mag Meter	PD117-018-A	8705TSA010C3W0E5B3DT	TR-1176
FIT-3141	Rosemount Mag Meter 8732E Totalizer c/w Display	PD117-018-A	8732EST2A1E5C1	
LV-3141	2"- 300# ANSI Fisher D4 Control Valve 1/2" Trim	PD117-018-A	D4	VA-1612
FE-3143	3"- 300# ANSI Meter Run	PD117-018-A		MR-1226
MVS-3143	Multivariable Transmitter 0 - 250" W.C., 0 - 3600 psig	PD117-018-A	MVS205E (RSE2DH)	TR-1182
TE-3143	2"- 300# ANSI RTD c/w 2"- 300# RF Flanged Thermowell	PD117-018-A		
LSLL-3141	2"- SOR Electric Level Switch (Nace)	PD117-018-A	1510B-G2A-C-W9-ES-CSCV	CO-1138
PI-3141	Pressure Gauge	PD117-018-A	233.54	GG-1128
DPCV-3142	Local Differential Pressure Valve	PD117-018-A	Fisher ET 3", 2 5/16" Port	VA-1616
DPC-3142	Local Differential Pressure Controller	PD117-018-A	4194 HBR DP Controller	CO-1219
DP-3142A/B	Drip Pots - 12" LG, 2500 psig MAWP	PD117-018-A		MS-1140
MFD-3142	5-Way Manifold	PD117-018-A	WM55314	MR-1173

Qty #	Tag #	Item	P/N
5	BRB10A	3"-300# Ball Valve, RF, A216-WCB, TE or 3 PCE, 316 SS Trim, Floating, RP, Nace, LO	VA-1924
28	BRB10A	2"- 300# Ball Valve, RF, A216-WCB, TE or 3 PCE, 316 SS Trim, Floating, RP, Nace, LO	VA-1923
2	BRB10A	2"- 300# Ball Valve, RF, A216-WCB, TE or 3 PCE, 316 SS Trim, Floating, RP, Nace, LO	VA-1617
13	BRT15A	1"- Class 800, Ball Valve, FNPT, SA-105-N, Unibody, 316 SS Trim, RP, Nace	VA-1654
2	BFT15A	1"- Class 800, Ball Valve, FNPT, SA-105-N, Unibody, 316 SS Trim, FP, Nace	VA-2054
11	BFT15A	1/2"- Class 800 Ball Valve, FNPT, SA-105-N, Unibody or Threaded, 316 SS Trim, FP	VA-1151
2	BRT05A	1/2"- Class 800 Ball Valve, FNPT, SA-105-N, Unibody or Threaded, 316 SS Trim, RP	VA-1150
31	BRT05B	1/2"- Class 800, Ball Valve, FNPT, SA-105-N, TE or 3 pce, 316 SS Trim, RP, Nace	VA-1151
9	BRT05B	1/2"- Class 800, Ball Valve, FNPT, SA-105-N, TE or 3 pce, 316 SS Trim, RP, Nace	VA-1596
35	BRT05A	1/4"- Class 800, Ball Valve, FNPT, SA-105-N, Unibody or Threaded, 316 SS Trim, RP	VA-1103
2	CSB10A	3"- 300# Check Valve, RF, SA-216-WCB, Swing Type, BC, Nace	VA-1620
3	BRB10A	2"- 300# Check Valve RF, SA-216-WCB, Swing Type, RF, BC, Nace	VA-1619
2	CDB10A	2"- 300# Check Valve RF, SA-216-WCB, Swing Type, RF, Waffer, BC, Nace	VA-1833
1	CSA10A	3"- 150# Check Valve RF, SA-216-WCB, Swing Type, RF, BC, Nace	VA-1293
2	CHT15A	1"- Class 800 Check Valve, FNPT, SA-105-N, Horizontal Lift Piston Type, BC, Nace	VA-1437
1	CHT15A	1"- Class 800 Check Valve, FNPT, SA-105-N, Horizontal Lift Piston Type, BC, Nace	VA-1305
1	CHT15A	1/2"- Class 800 Check Valve, FNPT, SA-105-N, Horizontal Lift Piston Type, BC, Nace	VA-1862
6	CHT15A	1/2"- Class 800 Check Valve, FNPT, SA-105-N, Horizontal Lift Piston Type, BC, Nace	VA-1845
3	CHT15A	1/2"- Class 800 Check Valve, FNPT, SA-105-N, Horizontal Lift Piston Type, BC, Nace	VA-1906
2	GLB10A	2"- 300# Globe Valve RF, SA-216-WCB, T-Pattern, OS&Y, BB, Nace	VA-2007
1	GLB10A	2"- 300# Globe Valve RF, SA-216-WCB, T-Pattern, OS&Y, BB, Nace	VA-2023
1	GLB10A	3"- 300# Globe Valve RF, SA-216-WCB, T-Pattern, OS&Y, BB, Nace	VA-1802
1	GLT15A	1"- Class 800 Globe Valve, FNPT, SA-105-N, T-Pattern, OS&Y, BB, Nace	VA-1745
1	GLT15A	1"- Class 800 Globe Valve, FNPT, SA-105-N, T-Pattern, OS&Y, BB, Nace	VA-1308
1	GFT14A	1/2"- Class 800 Gate Valve, SW x NPT, SA-105-N, OS&Y, RP, BB, NACE	VA-2001
6	NEP17A	1/2"- 6000# Needle Valve, MNPT x FNPT, SA-479-316, Intergral Hard Seat, Nace	VA-1044
5	NEP17A	1/2"- 6000# Needle Valve, FNPT x FNPT, SA-479-316, Intergral Hard Seat, Nace	VA-1117
3	GRT14A	1"- Class 800 Gate Valve, SW x NPT, SA-105-N, OS&Y, RP, BB, NACE	VA-1679
6	-	3"- 300# Spec Blind SA-516-70N (5/16" Thk.)	PN-1937

Tag #	Item	P&ID	Model #	P/N
PSV-3010	Farris 2"- 300# RF x 3"- 150# RF H Orifice PSV	PD117-018-B	26HA12-120/S7	VA-1608
TI-3011	Wika Tempreature Gauge c/w Thermowell	PD117-018-B	TBA	GG-1242/1243
LG-3011	Quest-Tech Reflective	PD117-018-B	91RM	GG-1138/VA-1318
PIT-3011	Rosemount Pressure Transmitter	PD117-018-B	2088G3S22A1B4M5C6	TR-1178
LSHH-3011	2"- SOR Electric Level Switch (Nace)	PD117-018-B	1510B-G2A-C-W9-ES-CSCV	CO-1138
LSLL-3011	2"- SOR Electric Level Switch (Nace)	PD117-018-B	1510B-G2A-C-W9-ES-CSCV	CO-1138
LIT-3011	Rosemount Level Transmitter	PD117-018-B	3051CD2A22A1AS2M5B4C6	TR-1179
LC-3011	2"- Fisher L2 Level Controller	PD117-018-B	L2	CO-1090
LV-3011	2"- 300# ANSI Fisher D4 Control Valve 1" Trim	PD117-018-B	D4	VA-1613
FE-3011	2"- 300# ANSI Rosemount 8705 Mag Meter	PD117-018-B	8705TSA020C3W0E5B3DT	TR-1177
FIT-3011	Rosemount Mag Meter 8732E Totalizer c/w Display	PD117-018-B	8732EST2A1E5C1	
FE-3012	6"- 300# ANSI Canalta Senior Meter Run	PD117-018-B		MR-1210
MVS-3012	Multivariable Transmitter 0 - 250" W.C., 0 - 3600 psig	PD117-018-B	MVS205E (RSE2DH)	TR-1182
TE-3012	2"- 300# ANSI RTD c/w 2" 300# RF Flanged Thermowell	PD117-018-B		
BPV-3011	3"- 300# ANSI Fisher Back Pressure Control Valve 3 7/16" port	PD117-018-B	667-45 ET	VA-1607
LY-3011	Positioner Switch	PD117-018-B	DVC6010HC	
PI-3011	Wika Pressure Gauge	PD117-018-B	233.54	GG-1128
PI-3032	Wika Pressure Gauge	PD117-018-B	233.54	GG-1047
PSV-3031	Farris 1"- MNPT x 1 1/2"- FNPT E Orifice PSV	PD117-018-B	27EA34-M20	VA-1728
FE-3031	1" Turbine c/w Mag Pickup	PD117-018-B	9A-TM74000001B	MR-1213
FIT-3031	MC-III Totalizer	PD117-018-B	9A-50179024	MR-1166
PCV-3031	Fisher 627 Regulator 1/4" Trim	PD117-018-B	627	PR-1162
PSV-3200	1/4"- Relief Valve - RH4A, PSV (Parker) Set @ 720 psig	PD117-018-B	4M4FRH4AEPRTSS	VA-1236/VA-1202
PSV-3111	1/4"- Relief Valve - RH4A, PSV (Parker) Set @ 720 psig	PD117-018-B	4M4FRH4AEPRTSS	VA-1236/VA-1202
PSV-3121	1/4"- Relief Valve - RH4A, PSV (Parker) Set @ 720 psig	PD117-018-B	4M4FRH4AEPRTSS	VA-1236/VA-1202
PSV-3201	1/4"- Relief Valve - RH4A, PSV (Parker) Set @ 5000 psig	PD117-018-B	4M4FRH4AEPRTSS	VA-1236/VA-1203
PSV-3202	1/4"- Relief Valve - RH4A, PSV (Parker) Set @ 5000 psig	PD117-018-B	4M4FRH4AEPRTSS	VA-1236/VA-1203
PRV-1001	Fisher 67 CFR 0-120 psig c/w PI (0-160 psig)	PD117-018-B	67CFR-601SC	PR-1145/GG-1215
PRV-1002	Fisher 67 CFR 0-120 psig c/w PI (0-160 psig)	PD117-018-B	67CFR-601SC	PR-1145/GG-1215
PRV-1003	Fisher 67 CFR 0-35 psig c/w PI (0-60 psig)	PD117-018-B	67CFR-362SC	PR-1144/GG-1214
PRV-1004	Fisher 67 CFR 0-35 psig c/w PI (0-60 psig)	PD117-018-B	67CFR-362SC	PR-1144/GG-1214
PRV-1005	Fisher 67 CFR 0-35 psig c/w PI (0-60 psig)	PD117-018-B	67CFR-362SC	PR-1144/GG-1214
PRV-1006	Fisher 67CFR 0-35 psig c/w PI (0-60 psig)	PD117-018-B	67CFR-362SC	PR-1144/GG-1214
PRV-1007	Fisher 67 CFR 0-35 psig c/w PI (0-60 psig)	PD117-018-B	67CFR-362SC	PR-1144/GG-1214
PRV-1009A	Fisher 67 CFR 0-120 psig c/w PI (0-160 psig)	PD117-018-B	67CFR-601SC	PR-1145/GG-1215
PRV-1009B	Fisher 67 CFR 0-35 psig c/w PI (0-60 psig)	PD117-018-B	67CFR-362SC	PR-1144/GG-1214
PRV-1010A	Fisher 67 CFR 0-120 psig c/w PI (0-160 psig)	PD117-018-B	67CFR-601SC	PR-1145/GG-1215
PRV-1010B	Fisher 67 CFR 0-35 psig c/w PI (0-60 psig)	PD117-018-B	67CFR-362SC	PR-1144/GG-1214
PRV-1011A	Fisher 67 CFR 0-120 psig c/w PI (0-160 psig)	PD117-018-B	67CFR-601SC	PR-1145/GG-1215
PRV-1011B	Fisher 67 CFR 0-35 psig c/w PI (0-60 psig)	PD117-018-B	67CFR-362SC	PR-1144/GG-1214
PRV-1017	Fisher 67 CFR 0-120 psig c/w PI (0-60 psig)	PD117-018-B	67CFR-601SC	PR-1145/GG-1215
PRV-1026	Fisher 67 CFR 0-35 psig c/w PI (0-60 psig)	PD117-018-B	67CFR-362SC	PR-1144/GG-1214
SDY-3200	ASCO 24 Volt Solenoid	PD117-018-B	CEF8314G30-24	CO-1099
LG-3201A/B	Level/Rate Gauge 58"Lg. C/W mm Scale	PD117-018-B	-	GG-1136
LG-3111A/B	Level/Rate Gauge 58"Lg. C/W mm Scale	PD117-018-B	-	GG-1136
LG-3211A/B	Level/Rate Gauge 58"Lg. C/W mm Scale	PD117-018-B	-	GG-1136
ESDV-3200	1/2"- 3000# Thrd F.P. Actuated Ball Valve, F.C. WCB Body c/w Pneumatic Act. (Meridian/Elomatic)	PD117-018-B	ES0040.U2A04A.S14KL1	VA-2005

PIPING CLASS: AAA (150 ANSI RF)
SERVICE: SWEET, NORMAL, STD-TEMP
DESIGN: 285 PSIG @ -20°F/+100°F
CORR. ALLOW.: 0.0625"
X-RAY: 10% (ON BW)
PWHT: NO (ON BW)
BW PIPING: SEE SPOOL ISO DRAWINGS
NPT PIPING: SA-106-B SCH 80.
NPT FITTINGS: SA-105-N 3000cl
OTHER: HYDROTEST PRESSURE 428 PSI

PIPING CLASS: ASB (150 ANSI RF)
SERVICE: SOUR, NORMAL, STD-TEMP
DESIGN: 285 PSIG @ -20°F/+100°F
CORR. ALLOW.: 0.125"
X-RAY: 100% (ON BW)
PWHT: YES (ON BW SPOOLS ABOVE 6" NPS)
BW PIPING: SEE SPOOL ISO DRAWINGS
NPT PIPING: SA-106-B SCH 80.
NPT FITTINGS: SA-105-N 3000cl
OTHER: HYDROTEST PRESSURE 428 PSI

PIPING CLASS: BSB (300 ANSI RF)
SERVICE: SOUR, NORMAL, STD-TEMP
DESIGN: 740 PSIG @ -20°F/+100°F
CORR. ALLOW.: 0.125"
X-RAY: 100% (ON BW)
PWHT: YES (ON BW SPOOLS ABOVE 6" NPS)
BW PIPING: SEE SPOOL ISO DRAWINGS
NPT PIPING: SA-106-B SCH 80.
NPT FITTINGS: SA-105-N 3000cl
OTHER: HYDROTEST PRESSURE 1110 PSI

PIPING CLASS: CAE (600 ANSI RF)
SERVICE: SWEET, NORMAL, STD-TEMP
DESIGN: 1480 PSIG @ -20°F/+100°F
CORR. ALLOW.: 0.0625"
X-RAY: 10% (ON BW)
PWHT: YES (ON BW SPOOLS ABOVE 6" NPS)
BW PIPING: SEE SPOOL ISO DRAWINGS
NPT PIPING: SA-106-B SCH 160.
NPT FITTINGS: SA-105-N 6000cl
OTHER: HYDROTEST PRESSURE 2220 PSI

GENERAL NOTES:-

1. SEPARATORS TO BE FULLY INTERNALLY COATED.
2. CHEMICAL TANKS SUPPLIED BY ULTRAFAB.
3. PIPING SHALL BE PER EQUINOX SPEC. VENDOR TO SPECIFY MODEL NUMBERS FOR VALVES WITH SUITABLE CHLORIDE-RESISTANT MATERIAL.
4. ALL INSTRUMENT TAGS ON THIS DRAWING ARE PREFIXED '20'.
5. 20ø UPSTREAM AND 5ø DOWNSTREAM OF METER REQUIRED PER OGC FOR LIQUID & GAS METER.
6. FUEL GAS PURGE FOR DRAIN HEADER.
7. SAMPLE QUILL PROVIDED BY EQUINOX, INSTALLED BY ULTRAFAB.
8. ALL INSTRUMENTS TO BE VENTED OUTSIDE VIA A 1/2" TUBING HEADER, 1 METER ABOVE EAVE HEIGHT.
9. TUBE FITTING TO BE SWAGELOK
10. TUBE FITTING TO BE 316SS

REV.	DATE	DESCRIPTION	DRAWN	CHECK	DESIGN	APPR.
1	15-MAY-12	AS BUILT	DZ	MH	LM	
0	01-SEP-11	ISSUED FOR CONSTRUCTION	DZ		LM	

ULTRAFAB INDUSTRIES LTD.

CLIENT. MURPHY c/o EQUINOX ENGINEERING

TITLE. SEPARATOR PACKAGE SKID (20-PK-3000)
SHEET 3 OF 3 - P&ID

SCALE.	DRAWING No. & Computer File #	DATE	TIME
N.T.S.	PD117-018-C	05-25-11	14:21

FILE:- Projects 2011/117-000/117-018/Drawings/PD117-018-C

THIS DRAWING AND THE DESIGN IT COVERS ARE CONFIDENTIAL AND THE PROPERTY OF ULTRAFAB INDUSTRIES LTD., AND SHALL NOT BE DISCLOSED TO OTHERS OR REPRODUCED IN ANY MANNER OR USED FOR ANY PURPOSE WHATSOEVER EXCEPT BY WRITTEN CONSENT OF ULTRAFAB.