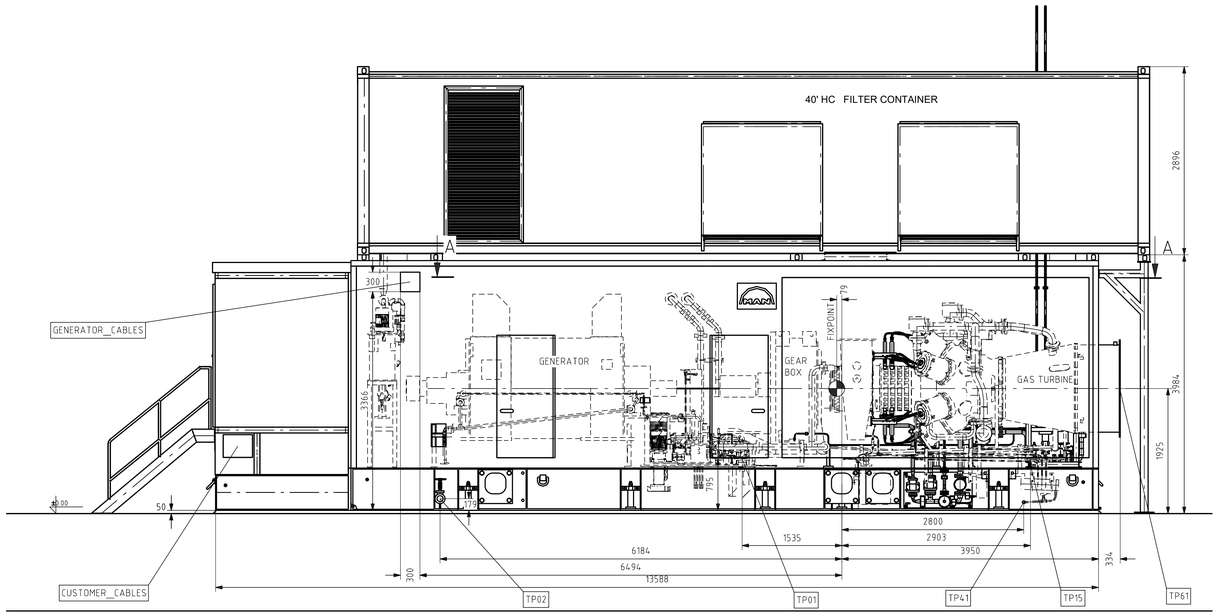

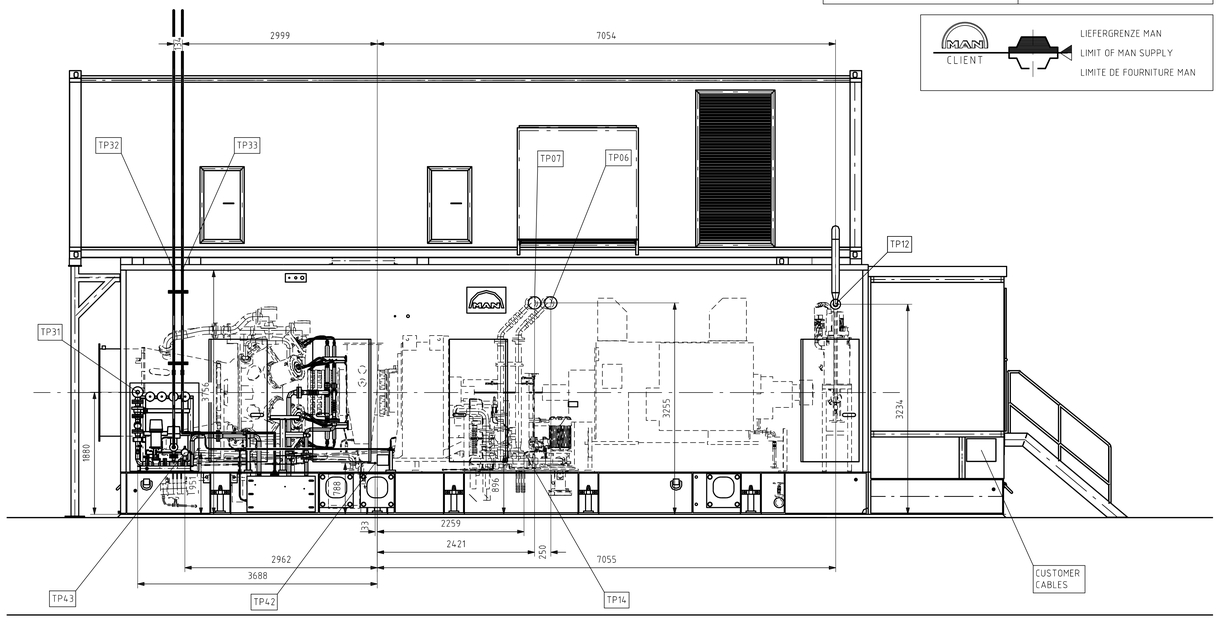

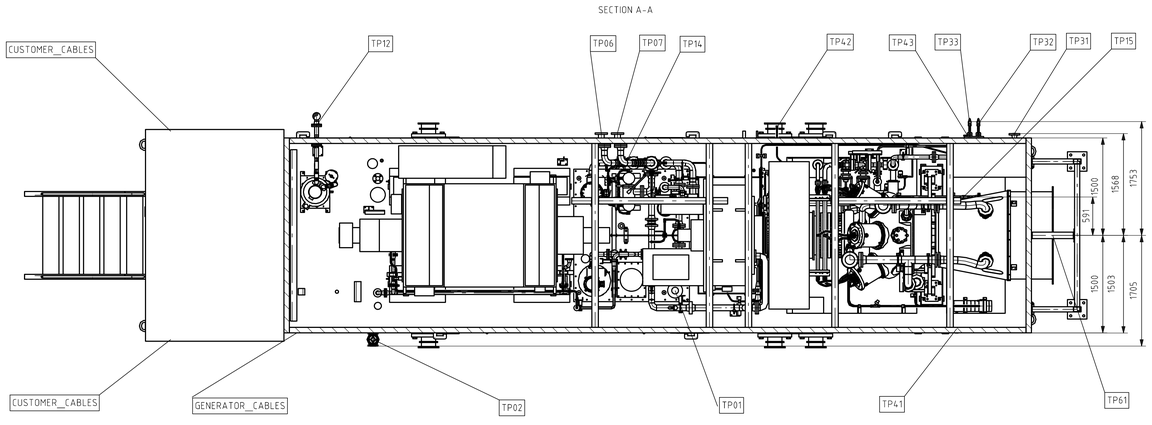

EXHAUST FLANGE TP61
1:10

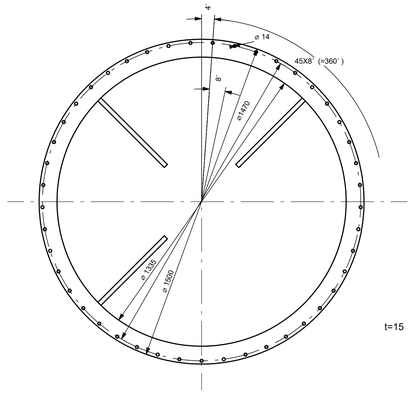

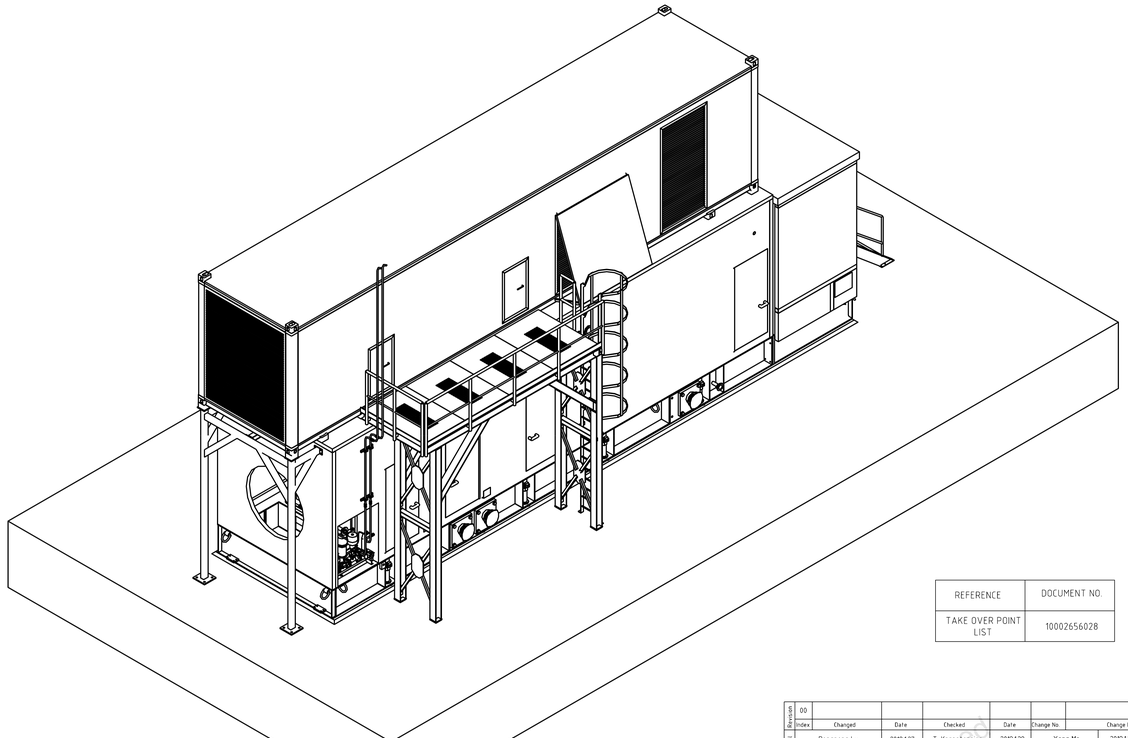

REFERENCE	DOCUMENT NO.
TAKE OVER POINT LIST	10002656028

Revision	Index	Changed	Date	Checked	Date	Change No.	Change Description
Original	00	Pengpeng Lu	2019.12.7	T. Karastergiou	2019.12.8	Yong Ma	2019.12.8
		Designed	Date	Checked	Date	Released	Date

Weight | Original Scale

Description: TAKE OVER POINT
Applicable for air cooler variant

Size A0 | Lang. EN | Similar Drawing | Substitute for

MAN | SIXPAC2.0 | Doc. Type DRW | Document No. 10002656029 | Doc. Part 001 | Rev. 00 | Sheet of

CAD: PDMS:EHM
Sheet: 10002656029 S1
User: CZB

The reproduction, distribution and utilization of this document as well as the communication of its contents to others without explicit authorization is prohibited. Offenders will be held liable for the payment of damages. All rights reserved in the event of the grant of a patent, utility model or design.

General Tolerances: ISO 2768-mK / ISO 13920-BE
Welding Standards: ISO 2553 / ISO 5817
Surfaces: DIN ISO 1302

(c) MAN Energy Solutions SE

Theodoros Karastergios ETETY DRW 10002656029 001 00 17.09.2019