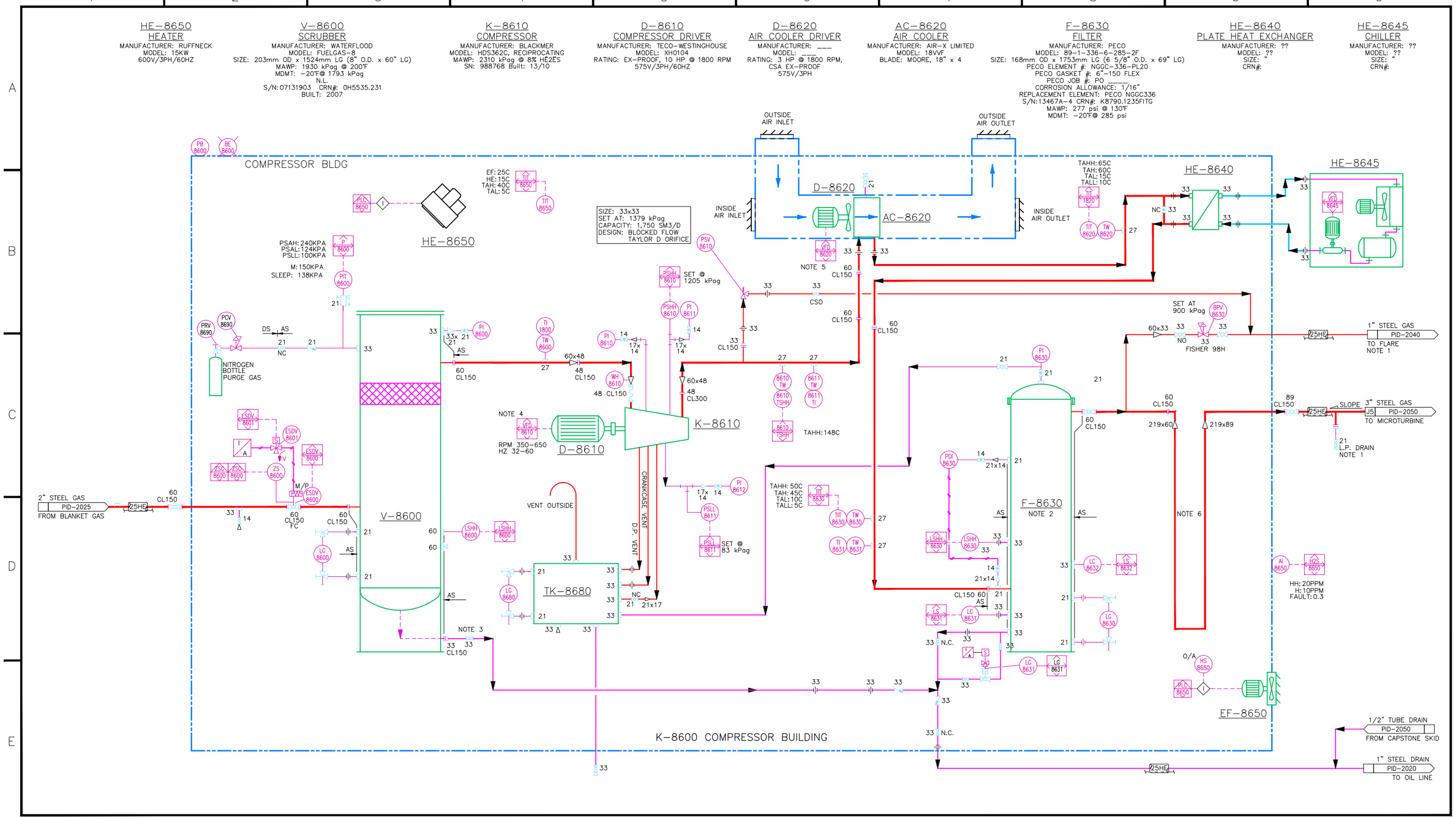

REV	DESCRIPTION	BY	DATE	CHK	APP
1	ISSUED FOR CONSTRUCTION	YQ	02NOV2017		
A	ISSUED FOR REVIEW	JC	20SEPT2017		

REFERENCE DRAWING
–

NOTES:
1. FIELD FIT PIPING.
2. UT RECOMMENDED BI-ANNUALLY.
3. PIPING CONFIGURATION TO ALLOW FOR FUTURE AUTOMATIC DUMP VALVE.
4. COMPRESSOR VFD CONTROL: PRIORITY TO MAINTAIN 22PSI SUCTION, THEN 120PSI DISCHARGE.
5. COOLER VFD CONTROL: MAINTAIN OUTLET GAS TEMPERATURE @ 50°C
6. LENGTH OF 217 PIPE TO BE MIN 20 FEET

TUNDRA OIL & GAS PARTNERSHIP

GOODLANDS
16-10-1-24 W1M

PROCESS & INSTRUMENTATION DIAGRAM
COMPRESSOR SKID

DRAWN BY:	SCALE:	AFE:	DRAWING NUMBER:	REV NO:
JC	NTS		16-10-1-24-PID-2045	1