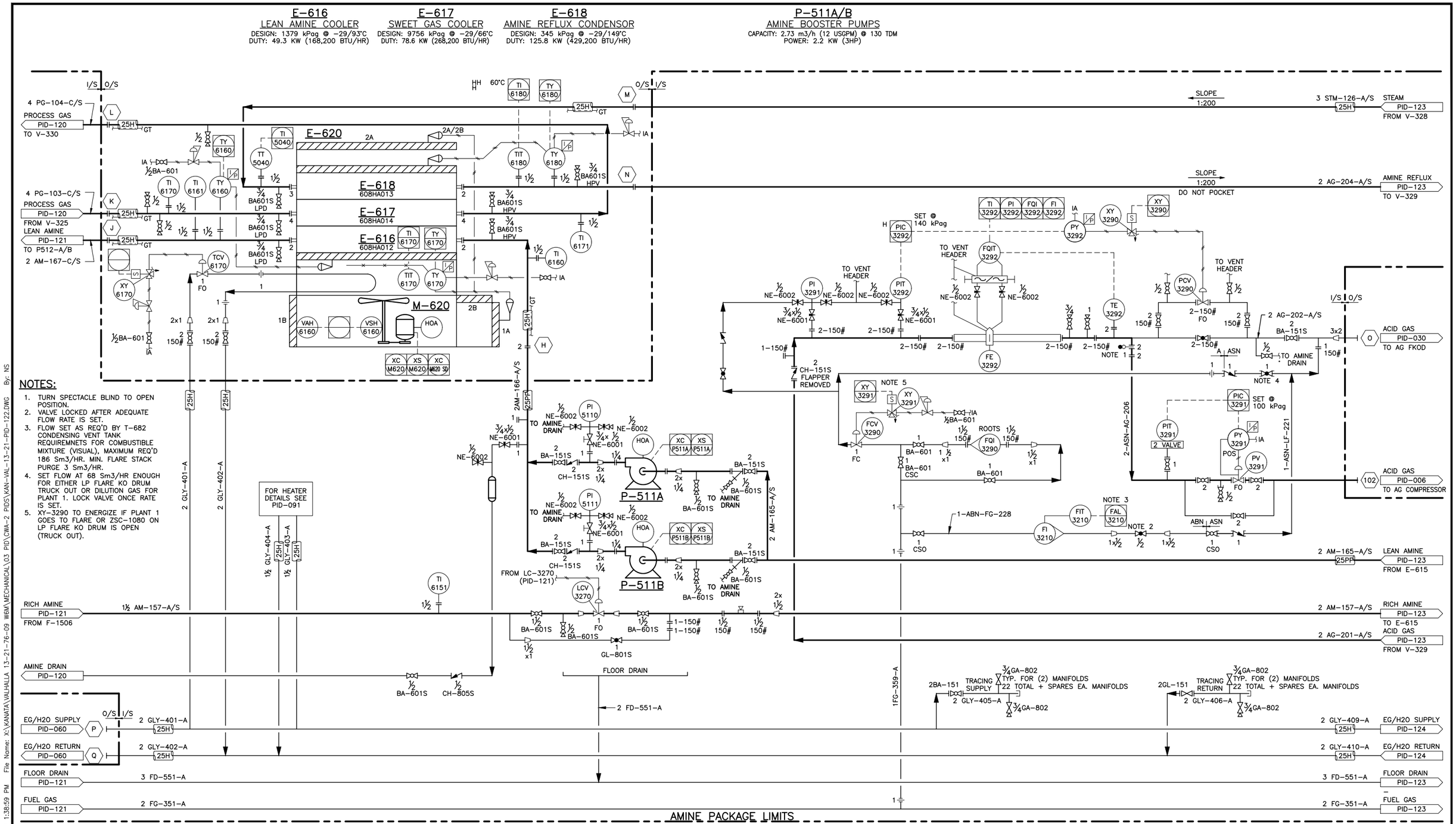

NOTES:

1. TURN SPECTACLE BLIND TO OPEN POSITION.
2. VALVE LOCKED AFTER ADEQUATE FLOW RATE IS SET.
3. FLOW SET AS REQ'D BY T-682 CONDENSING VENT TANK REQUIREMNETS FOR COMBUSTIBLE MIXTURE (VISUAL), MAXIMUM REQ'D 186 Sm3/HR. MIN. FLARE STACK PURGE 3 Sm3/HR.
4. SET FLOW AT 68 Sm3/HR ENOUGH FOR EITHER LP FLARE KO DRUM TRUCK OUT OR DILUTION GAS FOR PLANT 1. LOCK VALVE ONCE RATE IS SET.
5. XY-3290 TO ENERGIZE IF PLANT 1 GOES TO FLARE OR ZSC-1080 ON LP FLARE KO DRUM IS OPEN (TRUCK OUT).

REFERENCE DRAWING	DESCRIPTION

ENG STAMP & PERMIT BELOW APPLY TO REVISION 2 ONLY

AS-BUILT DRAWING

TRIDYNE PROJECTS CORPORATION WAS NOT RETAINED TO PROVIDE FULL TIME FIELD REVIEW OF THE CONSTRUCTION. AS SUCH, THIS AS-BUILT DRAWING HAS BEEN PREPARED IN PART ON THE BASIS OF INFORMATION COMPILED AND FURNISHED BY OTHERS. TRIDYNE PROJECTS CORPORATION CANNOT BE RESPONSIBLE FOR ANY ERRORS OR OMISSIONS WHICH HAVE BEEN INCORPORATED INTO THIS DRAWING.

STAMPS & PERMITS

PROJ. No.	REV.	REVISION DESCRIPTION	DATE	BY	CHK'D	APP'D
2017089	4	AS-BUILT	2019.03.18	CB	DZ	–
2017089	3	RE-ISSUED FOR CONSTRUCTION	2018.10.07	–	–	KJ
2017089	2	RE-ISSUED FOR CONSTRUCTION	2018.09.14	NS	DZ	KJ
2017089	1	ISSUED FOR CONSTRUCTION	2018.07.04	NS	SK	KJ
2017089	0	ISSUED FOR CONSTRUCTION	2018.06.04	NS	SK	KJ

TRIDYNE PROJ. No.: 2017089
DATE: 2018.06.04
DRAWN BY: NS
CHECKED: SK
APPROVED: KJ

KANATA ENERGY GROUP
TAQA
TRIDYNE PROJECTS CORPORATION

VALHALLA 13-21 GAS PLANT
LSD: 13-21-76-09 W6M
AMINE PLANT
TRAIN 1 PACKAGE
PIPING & INSTRUMENTATION DIAGRAM

SCALE (D-SIZE): NONE
DWG No.: KAN-VAL-13-21-PID-122
REV. 4

Plot Date: Wednesday, June 26, 2019 1:38:59 PM File Name: X:\KANATA\VALHALLA 13-21-76-09 W6M\MECHANICAL\03 PID\CWA-2 PIDS\KAN-VAL-13-21-PID-122.DWG By: NS