556555

INLET SEPARATOR

2022-03-27 Report # 20220026

NORTHERN - AB

EAGLESHAM BATTERY

01-25-076-01W6

Cal. Procedure - UT001.001 Calibration Date- Jan 10 2022

Technician GLENN ALLEN CGSB UT2 - 9738

FGG INSPECTIONS
Let Our Experience
Work For You
20 YEARS

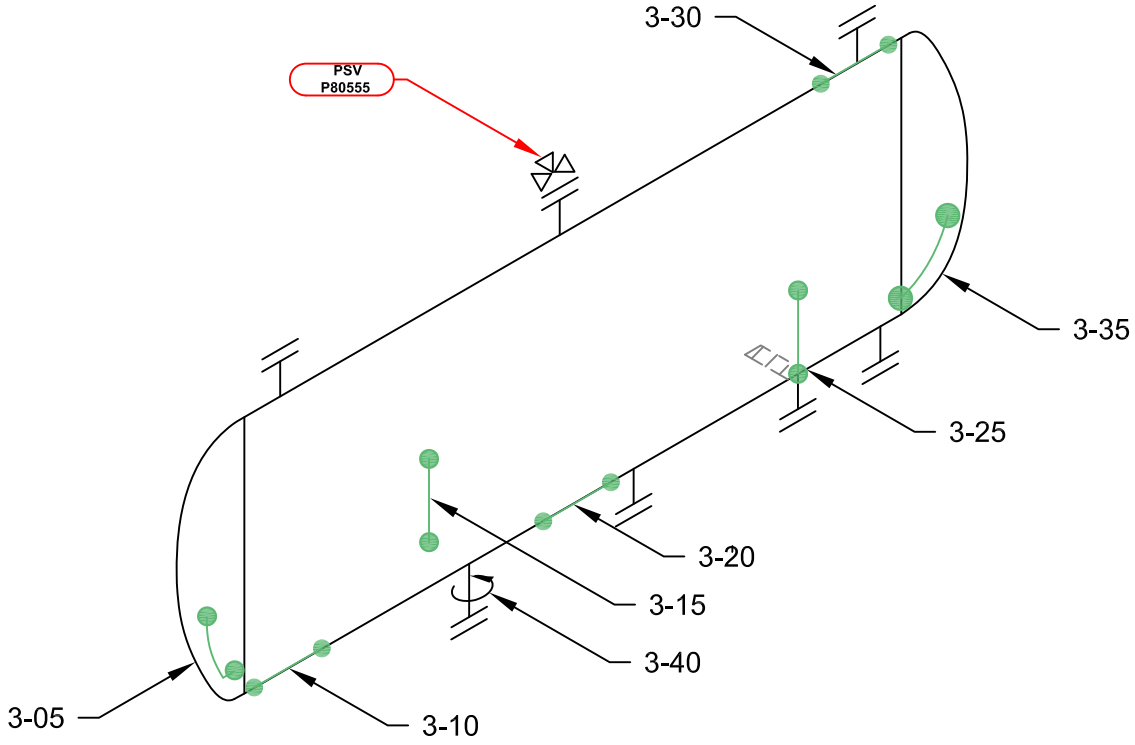


DESCRIPTION

**556555 INLET SEPARATOR DWG 3**

FGG INSPECTIONS
Let Our Experience
Work For You
20 YEARS

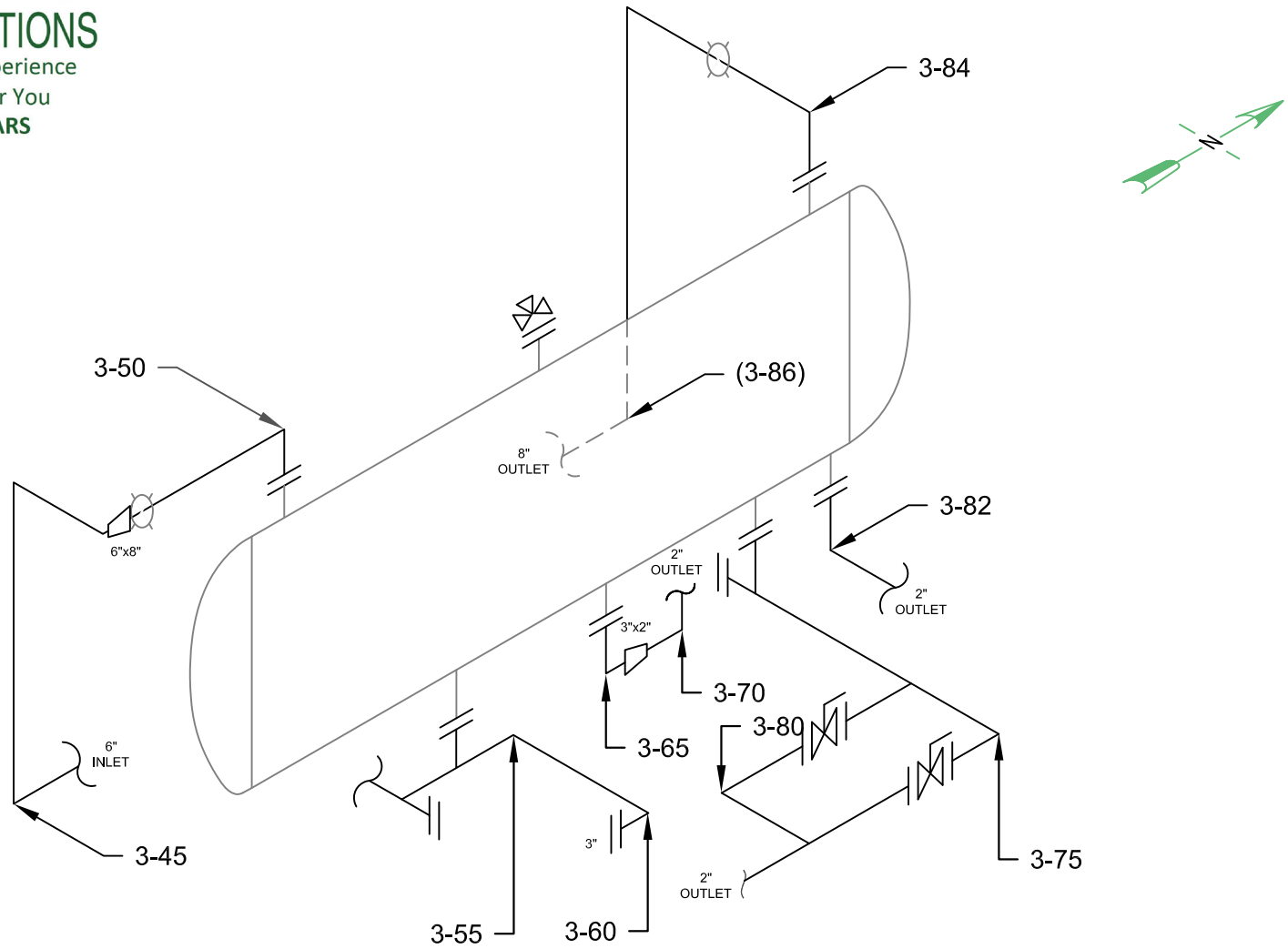


DESCRIPTION

**556555 INLET SEPARATOR PIPING DWG 3A**

# LONG RUN EXPLORATION

FGG INSPECTIONS
Let Our Experience Work For You
20 YEARS

Vessel Number: **556555**

Inspector: DOUG GOHMANN

| | | | | | |
|---|---|---|---|---|---|
| District Unit: | NORTHERN - AB | Manufacturer: | BROMLEY | | |
| Vessel Name: | INLET SEPARATOR | Serial Number: | 523557 | | |
| Year Built: | 2005 | Shell MAWP PSI: | 720 | MAWT F: | 100 |
| Tag Number: | - | Tube MAWP PSI: | | MAWT F: | |
| CRN: | T4475.2 | Vessel CA: | 0.1250 | | |
| Location: | EAGLESHAM | Skid: | PKG54494 | | |

| | |
|---|---|
| LSD: | **01-25-076-01W6** |
| Survey Date: | 27/03/2022 |
| Process: | SOUR |
| Project #: | FGG-032231 |

Dwg: 3

| | | |
|---|---|---|
| PSV (SS) Number: | PSV (SS) Set Pressure: | PSV (SS) Calibration Date: |
| PSV (TS) Number: | PSV (TS) Set Pressure: | PSV (TS) Calibration Date: |

| CML | Description | | Baseline | Previous | Current | Year | Avg | Min |
|---|---|---|---|---|---|---|---|---|
| **3-05** | | Head | 1.391 | 1.391 | 1.385 | 2010 | 1.396 | 1.382 |
| Shape | Ellipsoidal | shell Side | 1.382 | 1.382 | 1.382 | 2015 | 1.392 | 1.382 |
| OD | 60 | | 1.397 | 1.397 | 1.383 | 2022 | 1.386 | 1.382 |
| Spec. | VIII Div 1 | | 1.405 | 1.397 | 1.385 | **ST Loss MPY** | 0.000 | |
| Material | SA 516 - 70 | | 1.399 | 1.397 | 1.389 | **LT Loss MPY** | 0.000 | |
| | | | 1.401 | 1.389 | 1.389 | | | |

| | | | |
|---|---|---|---|
| **Nominal** | 1.3750 | **Recommended Next Inspection** | 2023 |
| **CA** | 0.1250 | **Recommended Retirement** | 2042 |
| **TMIN** | 1.0342 | | |

Comments-->

OK

| CML | Description | | Baseline | Previous | Current | Year | Avg | Min |
|---|---|---|---|---|---|---|---|---|
| **3-10** | | Shell | 1.268 | 1.268 | 1.258 | 2010 | 1.267 | 1.263 |
| Shape | Cylindrical | shell Side | 1.271 | 1.268 | 1.260 | 2015 | 1.264 | 1.260 |
| OD | 60 | | 1.267 | 1.265 | 1.265 | 2022 | 1.258 | 1.245 |
| Spec. | VIII Div 1 | | 1.268 | 1.260 | 1.260 | **ST Loss MPY** | 0.002 | |
| Material | SA 516 - 70 | | 1.264 | 1.260 | 1.257 | **LT Loss MPY** | 0.001 | |
| | | | 1.263 | 1.263 | 1.245 | | | |

| | | | |
|---|---|---|---|
| **Nominal** | 1.2500 | **Recommended Next Inspection** | 2023 |
| **CA** | 0.1250 | **Recommended Retirement** | 2042 |
| **TMIN** | 1.0578 | | |

Comments-->

OK

| CML | Description | | Baseline | Previous | Current | Year | Avg | Min |
|---|---|---|---|---|---|---|---|---|
| **3-15** | | Shell | 1.260 | 1.257 | 1.257 | 2010 | 1.260 | 1.258 |
| Shape | Cylindrical | shell Side | 1.260 | 1.256 | 1.256 | 2015 | 1.258 | 1.256 |
| OD | 60 | | 1.258 | 1.258 | 1.257 | 2022 | 1.258 | 1.256 |
| Spec. | VIII Div 1 | | 1.261 | 1.258 | 1.258 | **ST Loss MPY** | 0.000 | |
| Material | SA 516 - 70 | | 1.259 | 1.259 | 1.257 | **LT Loss MPY** | 0.000 | |
| | | | 1.262 | 1.260 | 1.260 | | | |

| | | | |
|---|---|---|---|
| **Nominal** | 1.2500 | **Recommended Next Inspection** | 2023 |
| **CA** | 0.1250 | **Recommended Retirement** | 2042 |
| **TMIN** | 1.0578 | | |

Comments-->

OK

# LONG RUN EXPLORATION

FGG INSPECTIONS
Let Our Experience Work For You
20 YEARS

Vessel Number: **556555**

Inspector: DOUG GOHMANN

| | | | | | |
|---|---|---|---|---|---|
| District Unit: | NORTHERN - AB | Manufacturer: | BROMLEY | | |
| Vessel Name: | INLET SEPARATOR | Serial Number: | 523557 | | |
| Year Built: | 2005 | Shell MAWP PSI: | 720 | MAWT F: | 100 |
| Tag Number: | - | Tube MAWP PSI: | | MAWT F: | |
| CRN: | T4475.2 | Vessel CA: | 0.1250 | | |
| Location: | EAGLESHAM | Skid: | PKG54494 | | |

| | |
|---|---|
| LSD: | **01-25-076-01W6** |
| Survey Date: | 27/03/2022 |
| Process: | SOUR |
| Project #: | FGG-032231 |

Dwg: 3

| | | |
|---|---|---|
| PSV (SS) Number: | PSV (SS) Set Pressure: | PSV (SS) Calibration Date: |
| PSV (TS) Number: | PSV (TS) Set Pressure: | PSV (TS) Calibration Date: |

| CML | Description | | Baseline | Previous | Current | Year | Avg | Min |
|---|---|---|---|---|---|---|---|---|
| **3-20** | | Shell | 1.289 | 1.281 | 1.281 | 2010 | 1.285 | 1.284 |
| Shape | Cylindrical | shell Side | 1.284 | 1.281 | 1.281 | 2015 | 1.281 | 1.278 |
| OD | 60 | | 1.284 | 1.281 | 1.281 | 2022 | 1.278 | 1.270 |
| Spec. | VIII Div 1 | | 1.285 | 1.278 | 1.270 | **ST Loss MPY** | 0.001 | |
| Material | SA 516 - 70 | | 1.284 | 1.282 | 1.277 | **LT Loss MPY** | 0.001 | |
| | | | 1.284 | 1.284 | 1.278 | | | |

| | | | |
|---|---|---|---|
| **Nominal** | 1.2500 | **Recommended Next Inspection** | 2023 |
| **CA** | 0.1250 | **Recommended Retirement** | 2042 |
| **TMIN** | 1.0578 | | |

Comments-->

OK

| CML | Description | | Baseline | Previous | Current | Year | Avg | Min |
|---|---|---|---|---|---|---|---|---|
| **3-25** | | Shell | 1.291 | 1.291 | 1.287 | 2010 | 1.293 | 1.288 |
| Shape | Cylindrical | shell Side | 1.288 | 1.288 | 1.286 | 2015 | 1.290 | 1.288 |
| OD | 60 | | 1.292 | 1.289 | 1.287 | 2022 | 1.288 | 1.285 |
| Spec. | VIII Div 1 | | 1.293 | 1.289 | 1.285 | **ST Loss MPY** | 0.000 | |
| Material | SA 516 - 70 | | 1.297 | 1.291 | 1.291 | **LT Loss MPY** | 0.000 | |
| | | | 1.298 | 1.289 | 1.289 | | | |

| | | | |
|---|---|---|---|
| **Nominal** | 1.2500 | **Recommended Next Inspection** | 2023 |
| **CA** | 0.1250 | **Recommended Retirement** | 2042 |
| **TMIN** | 1.0578 | | |

Comments-->

OK

| CML | Description | | Baseline | Previous | Current | Year | Avg | Min |
|---|---|---|---|---|---|---|---|---|
| **3-30** | | Shell | 1.293 | 1.293 | 1.292 | 2010 | 1.288 | 1.278 |
| Shape | Cylindrical | shell Side | 1.284 | 1.284 | 1.282 | 2015 | 1.288 | 1.278 |
| OD | 60 | | 1.278 | 1.278 | 1.278 | 2022 | 1.285 | 1.278 |
| Spec. | VIII Div 1 | | 1.297 | 1.297 | 1.296 | **ST Loss MPY** | 0.000 | |
| Material | SA 516 - 70 | | 1.295 | 1.295 | 1.282 | **LT Loss MPY** | 0.000 | |
| | | | 1.279 | 1.279 | 1.279 | | | |

| | | | |
|---|---|---|---|
| **Nominal** | 1.2500 | **Recommended Next Inspection** | 2023 |
| **CA** | 0.1250 | **Recommended Retirement** | 2042 |
| **TMIN** | 1.0578 | | |

Comments-->

OK

# LONG RUN EXPLORATION

FGG INSPECTIONS
Let Our Experience Work For You
20 YEARS

Vessel Number: **556555**

Inspector: DOUG GOHMANN

| | | | | | |
|---|---|---|---|---|---|
| District Unit: | NORTHERN - AB | Manufacturer: | BROMLEY | | |
| Vessel Name: | INLET SEPARATOR | Serial Number: | 523557 | | |
| Year Built: | 2005 | Shell MAWP PSI: | 720 | MAWT F: | 100 |
| Tag Number: | - | Tube MAWP PSI: | | MAWT F: | |
| CRN: | T4475.2 | Vessel CA: | 0.1250 | | |
| Location: | EAGLESHAM | Skid: | PKG54494 | | |

| | |
|---|---|
| LSD: | **01-25-076-01W6** |
| Survey Date: | 27/03/2022 |
| Process: | SOUR |
| Project #: | FGG-032231 |

Dwg: 3

| | | |
|---|---|---|
| PSV (SS) Number: | PSV (SS) Set Pressure: | PSV (SS) Calibration Date: |
| PSV (TS) Number: | PSV (TS) Set Pressure: | PSV (TS) Calibration Date: |

| CML | Description | | Baseline | Previous | Current | Year | Avg | Min |
|---|---|---|---|---|---|---|---|---|
| **3-35** | | Head | 1.372 | 1.372 | 1.372 | 2010 | 1.381 | 1.368 |
| Shape | Ellipsoidal | shell Side | 1.370 | 1.370 | 1.370 | 2015 | 1.370 | 1.368 |
| OD | 60 | | 1.368 | 1.368 | 1.368 | 2022 | 1.370 | 1.368 |
| Spec. | VIII Div 1 | | 1.390 | 1.371 | 1.371 | **ST Loss MPY** | 0.000 | |
| Material | SA 516 - 70 | | 1.392 | 1.371 | 1.371 | **LT Loss MPY** | 0.000 | |
| | | | 1.392 | 1.370 | 1.370 | | | |

| | | | |
|---|---|---|---|
| **Nominal** | 1.3750 | **Recommended Next Inspection** | 2023 |
| **CA** | 0.1250 | **Recommended Retirement** | 2042 |
| **TMIN** | 1.0342 | | |

Comments-->

OK

| CML | Description | | Baseline | Previous | Current | Year | Avg | Min |
|---|---|---|---|---|---|---|---|---|
| **3-40** | | Nozzle | 0.360 | 0.348 | 0.348 | 2010 | 0.360 | 0.357 |
| Shape | Cylindrical | shell Side | 0.359 | 0.348 | 0.348 | 2015 | 0.347 | 0.345 |
| OD | 2.375 | | 0.357 | 0.348 | 0.348 | 2022 | 0.347 | 0.345 |
| Spec. | VIII Div 1 | | 0.359 | 0.345 | 0.345 | **ST Loss MPY** | 0.000 | |
| Material | SA 106 - B | | 0.364 | 0.345 | 0.345 | **LT Loss MPY** | 0.001 | |
| | | | 0.363 | 0.345 | 0.345 | | | |

| | | | |
|---|---|---|---|
| **Nominal** | 0.3430 | **Recommended Next Inspection** | 2023 |
| **CA** | 0.1250 | **Recommended Retirement** | 2042 |
| **TMIN** | 0.0365 | | |

Comments-->

OK

| CML | Description | | Baseline | Previous | Current | Year | Avg | Min |
|---|---|---|---|---|---|---|---|---|
| **3-45** | | Piping | 0.259 | | 0.259 | 2010 | 0.256 | 0.251 |
| Shape | 90° Elbow | shell Side | 0.259 | | 0.259 | | | |
| OD | 6.625 | | 0.259 | | 0.259 | 2010 | 0.256 | 0.251 |
| Spec. | B31.3 | | 0.256 | | 0.256 | **ST Loss MPY** | | |
| Material | A 234 - WPB | | 0.251 | | 0.251 | **LT Loss MPY** | 0.000 | |
| | | | 0.253 | | 0.253 | | | |

| | | | |
|---|---|---|---|
| **Nominal** | 0.2800 | **Recommended Next Inspection** | 2023 |
| **CA** | 0.0350 | **Recommended Retirement** | 2042 |
| **TMIN** | 0.1171 | | |

Comments-->

NO ACCESS - CONFINED SPACE

OK

# LONG RUN EXPLORATION

FGG INSPECTIONS
Let Our Experience Work For You
20 YEARS

Vessel Number: **556555**

Inspector: DOUG GOHMANN

| | | | | | |
|---|---|---|---|---|---|
| District Unit: | NORTHERN - AB | Manufacturer: | BROMLEY | | |
| Vessel Name: | INLET SEPARATOR | Serial Number: | 523557 | | |
| Year Built: | 2005 | Shell MAWP PSI: | 720 | MAWT F: | 100 |
| Tag Number: | - | Tube MAWP PSI: | | MAWT F: | |
| CRN: | T4475.2 | Vessel CA: | 0.1250 | | |
| Location: | EAGLESHAM | Skid: | PKG54494 | | |

| | |
|---|---|
| LSD: | **01-25-076-01W6** |
| Survey Date: | 27/03/2022 |
| Process: | SOUR |
| Project #: | FGG-032231 |

Dwg: 3

| | | |
|---|---|---|
| PSV (SS) Number: | PSV (SS) Set Pressure: | PSV (SS) Calibration Date: |
| PSV (TS) Number: | PSV (TS) Set Pressure: | PSV (TS) Calibration Date: |

| CML | Description | | Baseline | Previous | Current | Year | Avg | Min |
|---|---|---|---|---|---|---|---|---|
| **3-50** | | Piping | 0.507 | 0.507 | 0.507 | 2010 | 0.502 | 0.491 |
| Shape | 90° Elbow | shell Side | 0.510 | 0.507 | 0.499 | 2015 | 0.499 | 0.491 |
| OD | 8.625 | | 0.508 | 0.507 | 0.489 | 2022 | 0.495 | 0.489 |
| Spec. | B31.3 | | 0.491 | 0.491 | 0.491 | **ST Loss MPY** | 0.000 | |
| Material | A 234 - WPB | | 0.494 | 0.493 | 0.493 | **LT Loss MPY** | 0.000 | |
| | | | 0.504 | 0.491 | 0.491 | | | |

| | | | |
|---|---|---|---|
| **Nominal** | 0.5000 | **Recommended Next Inspection** | 2023 |
| **CA** | 0.0625 | **Recommended Retirement** | 2042 |
| **TMIN** | 0.1525 | | |

Comments-->

OK

| CML | Description | | Baseline | Previous | Current | Year | Avg | Min |
|---|---|---|---|---|---|---|---|---|
| **3-55** | | Piping | 0.200 | 0.194 | 0.194 | 2010 | 0.203 | 0.200 |
| Shape | 90° Elbow | shell Side | 0.201 | 0.193 | 0.193 | 2015 | 0.197 | 0.193 |
| OD | 3.5 | | 0.200 | 0.200 | 0.198 | 2022 | 0.197 | 0.193 |
| Spec. | B31.3 | | 0.200 | 0.199 | 0.199 | **ST Loss MPY** | 0.000 | |
| Material | A 234 - WPB | | 0.207 | 0.198 | 0.198 | **LT Loss MPY** | 0.001 | |
| | | | 0.207 | 0.199 | 0.199 | | | |

| | | | |
|---|---|---|---|
| **Nominal** | 0.2160 | **Recommended Next Inspection** | 2023 |
| **CA** | 0.0270 | **Recommended Retirement** | 2042 |
| **TMIN** | 0.0619 | | |

Comments-->

OK

| CML | Description | | Baseline | Previous | Current | Year | Avg | Min |
|---|---|---|---|---|---|---|---|---|
| **3-60** | | Piping | 0.209 | 0.209 | 0.206 | 2010 | 0.211 | 0.206 |
| Shape | 90° Elbow | shell Side | 0.207 | 0.203 | 0.203 | 2015 | 0.206 | 0.203 |
| OD | 3.5 | | 0.206 | 0.204 | 0.204 | 2022 | 0.202 | 0.196 |
| Spec. | B31.3 | | 0.210 | 0.204 | 0.204 | **ST Loss MPY** | 0.001 | |
| Material | A 234 - WPB | | 0.216 | 0.209 | 0.196 | **LT Loss MPY** | 0.001 | |
| | | | 0.215 | 0.207 | 0.196 | | | |

| | | | |
|---|---|---|---|
| **Nominal** | 0.2160 | **Recommended Next Inspection** | 2023 |
| **CA** | 0.0270 | **Recommended Retirement** | 2042 |
| **TMIN** | 0.0619 | | |

Comments-->

OK

# LONG RUN EXPLORATION

FGG INSPECTIONS
Let Our Experience Work For You
20 YEARS

Vessel Number: **556555**

Inspector: DOUG GOHMANN

| | | | | | |
|---|---|---|---|---|---|
| District Unit: | NORTHERN - AB | Manufacturer: | BROMLEY | | |
| Vessel Name: | INLET SEPARATOR | Serial Number: | 523557 | | |
| Year Built: | 2005 | Shell MAWP PSI: | 720 | MAWT F: | 100 |
| Tag Number: | - | Tube MAWP PSI: | | MAWT F: | |
| CRN: | T4475.2 | Vessel CA: | 0.1250 | | |
| Location: | EAGLESHAM | Skid: | PKG54494 | | |

| | |
|---|---|
| LSD: | **01-25-076-01W6** |
| Survey Date: | 27/03/2022 |
| Process: | SOUR |
| Project #: | FGG-032231 |

Dwg: 3

| | | |
|---|---|---|
| PSV (SS) Number: | PSV (SS) Set Pressure: | PSV (SS) Calibration Date: |
| PSV (TS) Number: | PSV (TS) Set Pressure: | PSV (TS) Calibration Date: |

| CML | Description | | Baseline | Previous | Current | Year | Avg | Min |
|---|---|---|---|---|---|---|---|---|
| **3-65** | | Piping | 0.180 | 0.177 | 0.175 | 2010 | 0.183 | 0.179 |
| Shape | 90° Elbow | shell Side | 0.179 | 0.177 | 0.177 | 2015 | 0.175 | 0.171 |
| OD | 3.5 | | 0.183 | 0.173 | 0.173 | 2022 | 0.174 | 0.165 |
| Spec. | B31.3 | | 0.187 | 0.171 | 0.165 | **ST Loss MPY** | 0.001 | |
| Material | A 234 - WPB | | 0.186 | 0.171 | 0.171 | **LT Loss MPY** | 0.001 | |
| | | | 0.184 | 0.183 | 0.182 | | | |

| | | | |
|---|---|---|---|
| **Nominal** | 0.2160 | **Recommended Next Inspection** | 2023 |
| **CA** | 0.0270 | **Recommended Retirement** | 2042 |
| **TMIN** | 0.0619 | | |

Comments-->

Caution

| CML | Description | | Baseline | Previous | Current | Year | Avg | Min |
|---|---|---|---|---|---|---|---|---|
| **3-70** | | Piping | 0.194 | 0.186 | 0.186 | 2010 | 0.193 | 0.191 |
| Shape | 90° Elbow | shell Side | 0.195 | 0.183 | 0.183 | 2015 | 0.184 | 0.183 |
| OD | 2.375 | | 0.193 | 0.183 | 0.183 | 2022 | 0.184 | 0.183 |
| Spec. | B31.3 | | 0.191 | 0.183 | 0.183 | **ST Loss MPY** | 0.000 | |
| Material | A 234 - WPB | | 0.191 | 0.183 | 0.183 | **LT Loss MPY** | 0.001 | |
| | | | 0.193 | 0.186 | 0.186 | | | |

| | | | |
|---|---|---|---|
| **Nominal** | 0.2180 | **Recommended Next Inspection** | 2023 |
| **CA** | 0.0272 | **Recommended Retirement** | 2042 |
| **TMIN** | 0.0420 | | |

Comments-->

Caution

| CML | Description | | Baseline | Previous | Current | Year | Avg | Min |
|---|---|---|---|---|---|---|---|---|
| **3-75** | | Piping | 0.203 | 0.197 | 0.197 | 2010 | 0.196 | 0.191 |
| Shape | 90° Elbow | shell Side | 0.200 | 0.193 | 0.193 | 2015 | 0.189 | 0.184 |
| OD | 2.375 | | 0.197 | 0.184 | 0.184 | 2022 | 0.189 | 0.184 |
| Spec. | B31.3 | | 0.191 | 0.184 | 0.184 | **ST Loss MPY** | 0.000 | |
| Material | A 234 - WPB | | 0.192 | 0.190 | 0.190 | **LT Loss MPY** | 0.001 | |
| | | | 0.191 | 0.186 | 0.186 | | | |

| | | | |
|---|---|---|---|
| **Nominal** | 0.2180 | **Recommended Next Inspection** | 2023 |
| **CA** | 0.0272 | **Recommended Retirement** | 2042 |
| **TMIN** | 0.0420 | | |

Comments-->

Caution

# LONG RUN EXPLORATION

FGG INSPECTIONS
Let Our Experience Work For You
20 YEARS

Vessel Number: **556555**

Inspector: DOUG GOHMANN

| | | | | | |
|---|---|---|---|---|---|
| District Unit: | NORTHERN - AB | Manufacturer: | BROMLEY | | |
| Vessel Name: | INLET SEPARATOR | Serial Number: | 523557 | | |
| Year Built: | 2005 | Shell MAWP PSI: | 720 | MAWT F: | 100 |
| Tag Number: | - | Tube MAWP PSI: | | MAWT F: | |
| CRN: | T4475.2 | Vessel CA: | 0.1250 | | |
| Location: | EAGLESHAM | Skid: | PKG54494 | | |

| | |
|---|---|
| LSD: | **01-25-076-01W6** |
| Survey Date: | 27/03/2022 |
| Process: | SOUR |
| Project #: | FGG-032231 |

Dwg: 3

| | | |
|---|---|---|
| PSV (SS) Number: | PSV (SS) Set Pressure: | PSV (SS) Calibration Date: |
| PSV (TS) Number: | PSV (TS) Set Pressure: | PSV (TS) Calibration Date: |

| CML | Description | | Baseline | Previous | Current | Year | Avg | Min |
|---|---|---|---|---|---|---|---|---|
| **3-80** | | Piping | 0.206 | 0.200 | 0.200 | 2010 | 0.207 | 0.197 |
| Shape | 90° Elbow | shell Side | 0.204 | 0.198 | 0.198 | 2015 | 0.199 | 0.197 |
| OD | 2.375 | | 0.205 | 0.203 | 0.200 | 2022 | 0.198 | 0.193 |
| Spec. | B31.3 | | 0.197 | 0.197 | 0.193 | **ST Loss MPY** | 0.001 | |
| Material | A 234 - WPB | | 0.221 | 0.197 | 0.197 | **LT Loss MPY** | 0.000 | |
| | | | 0.209 | 0.199 | 0.199 | | | |

| | | | |
|---|---|---|---|
| **Nominal** | 0.2180 | **Recommended Next Inspection** | 2023 |
| **CA** | 0.0272 | **Recommended Retirement** | 2042 |
| **TMIN** | 0.0420 | | |

Comments-->

OK

| CML | Description | | Baseline | Previous | Current | Year | Avg | Min |
|---|---|---|---|---|---|---|---|---|
| **3-82** | | Piping | 0.215 | 0.215 | 0.207 | 2010 | 0.219 | 0.215 |
| Shape | 90° Elbow | shell Side | 0.220 | 0.214 | 0.212 | 2015 | 0.212 | 0.209 |
| OD | 2.375 | | 0.221 | 0.209 | 0.209 | 2022 | 0.208 | 0.203 |
| Spec. | B31.3 | | 0.220 | 0.209 | 0.209 | **ST Loss MPY** | 0.001 | |
| Material | A 234 - WPB | | 0.220 | 0.209 | 0.205 | **LT Loss MPY** | 0.001 | |
| | | | 0.215 | 0.215 | 0.203 | | | |

| | | | |
|---|---|---|---|
| **Nominal** | 0.2180 | **Recommended Next Inspection** | 2023 |
| **CA** | 0.0272 | **Recommended Retirement** | 2042 |
| **TMIN** | 0.0420 | | |

Comments-->

OK

| CML | Description | | Baseline | Previous | Current | Year | Avg | Min |
|---|---|---|---|---|---|---|---|---|
| **3-84** | | Piping | 0.315 | 0.315 | 0.315 | 2010 | 0.312 | 0.310 |
| Shape | 90° Elbow | shell Side | 0.311 | 0.308 | 0.308 | 2015 | 0.309 | 0.307 |
| OD | 8.625 | | 0.310 | 0.307 | 0.307 | 2022 | 0.309 | 0.307 |
| Spec. | B31.3 | | 0.310 | 0.307 | 0.307 | **ST Loss MPY** | 0.000 | |
| Material | A 234 - WPB | | 0.310 | 0.307 | 0.307 | **LT Loss MPY** | 0.000 | |
| | | | 0.314 | 0.307 | 0.307 | | | |

| | | | |
|---|---|---|---|
| **Nominal** | 0.3220 | **Recommended Next Inspection** | 2023 |
| **CA** | 0.0402 | **Recommended Retirement** | 2042 |
| **TMIN** | 0.1525 | | |

Comments-->

OK

# LONG RUN EXPLORATION

FGG INSPECTIONS
Let Our Experience Work For You
20 YEARS

Vessel Number: **556555**

Inspector: DOUG GOHMANN

| | | | | | |
|---|---|---|---|---|---|
| District Unit: | NORTHERN - AB | Manufacturer: | BROMLEY | | |
| Vessel Name: | INLET SEPARATOR | Serial Number: | 523557 | | |
| Year Built: | 2005 | Shell MAWP PSI: | 720 | MAWT F: | 100 |
| Tag Number: | - | Tube MAWP PSI: | | MAWT F: | |
| CRN: | T4475.2 | Vessel CA: | 0.1250 | | |
| Location: | EAGLESHAM | Skid: | PKG54494 | | |

LSD: **01-25-076-01W6**
Survey Date: 27/03/2022
Process: SOUR
Project #: FGG-032231

Dwg: 3

PSV (SS) Number:
PSV (TS) Number:
PSV (SS) Set Pressure:
PSV (TS) Set Pressure:
PSV (SS) Calibration Date:
PSV (TS) Calibration Date:

| CML | Description | | Baseline | Previous | Current | Year | Avg | Min |
|---|---|---|---|---|---|---|---|---|
| 3-86 | | Piping | 0.313 | | 0.313 | 2010 | 0.314 | 0.312 |
| Shape | 90° Elbow | shell Side | 0.314 | | 0.314 | | | |
| OD | 8.625 | | 0.316 | | 0.316 | 2010 | 0.314 | 0.312 |
| Spec. | B31.3 | | 0.315 | | 0.315 | | | |
| Material | A 234 - WPB | | 0.312 | | 0.312 | | | |
| | | | 0.315 | | 0.315 | | | |

**ST Loss MPY**
**LT Loss MPY** 0.000

| | | | |
|---|---|---|---|
| **Nominal** | 0.3220 | **Recommended Next Inspection** | 2023 |
| **CA** | 0.0402 | **Recommended Retirement** | 2042 |
| **TMIN** | 0.1525 | | |

Comments-->
NO ACCESS - CONFINED SPACE

OK

556555

| | | |
|---|---|---|
| | **ULTRASONIC FLAW DETECTOR CALIBRATION RECORD & EQUIPMENT LISTING** | Procedure: UT 001.001<br>Revision: 0<br>Date of Issue: Jan. 04, 2022 |

| | | | | | | | |
|---|---|---|---|---|---|---|---|
| Date: | January 10th, 2022 | | | | | | |
| Instrumentation: | Manufacturer: | Olympus | Model: | EP6LT-UE-EN12 | | Serial #: | 190169901 |
| Probe: | Manufacturer: | Olympus | Model: | Dual DHC711 | Size: 0.250" | Serial #: | 1164693 |
| Probe: | Manufacturer: | N/A | Model: | N/A | Size: N/A | Serial #: | N/A |
| Probe: | Manufacturer: | N/A | Model: | N/A | Size: N/A | Serial #: | N/A |
| Calibration Block: | Type: | Stepblock (CS) | Serial #: | 08-7564 | Type: Stepblock (SS) | Serial #: | N/A |
| Conducted by: | Name: | Glenn Allen | CGSB #: | 9738 | Signature: | | |

**Table 1: Vertical Linearity**

| Ha % FSH | Limits % FSH | Hb - % FSH |
|---|---|---|
| 10 | 2 - 8 | 5 |
| 20 | 7 - 13 | 11 |
| 30 | 12 - 18 | 16 |
| 40 | 18 - 23 | 20 |
| 50 | 23 - 27 | 25 |
| 60 | 29 - 31 | 30 |
| 70 | 33 - 37 | 35 |
| 80 | 38 - 42 | 39 |
| 90 | 42 - 48 | 45 |
| 100 | 47 - 53 | 50 |

**Table 2: Horizontal Linearity**

| Back Reflection | Limits % FSW | % Sweep Trace |
|---|---|---|
| 1 | 0 - 3 | 0 |
| 2 | 8 - 12 | 11 |
| 3 | 20 | 20 |
| 4 | 28 - 32 | 30 |
| 5 | 38 - 42 | 39 |
| 6 | 48 - 52 | 50 |
| 7 | 58 - 62 | 60 |
| 8 | 68 - 72 | 70 |
| 9 | 80 | 80 |
| 10 | 88 - 92 | 90 |
| 11 | 98 - 102 | 100 |

**Table 3: Amplitude Control Linearity**
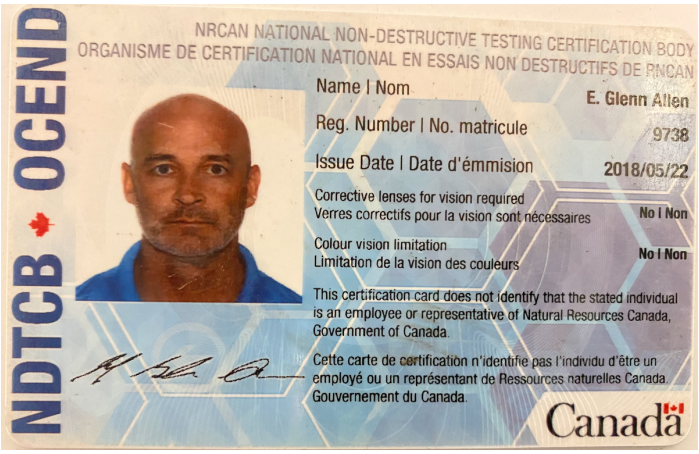
| Reference % FSH | DB Control Change | Limits % FSH | Reading - % FSH |
|---|---|---|---|
| 80 | - 6 | 35 - 45 | 40 |
| 80 | - 12 | 16 - 24 | 20 |
| 40 | + 6 | 64 - 96 | 80 |
| 20 | + 12 | 64 - 96 | 80 |