UH-10001/10002
BUILDING UNIT HEATERS

V-100
INLET SEPARATOR
1829 I.D. x 9144 S/S
DESIGN : 1965 KPa. @ -29°/38°C
2 PHASE

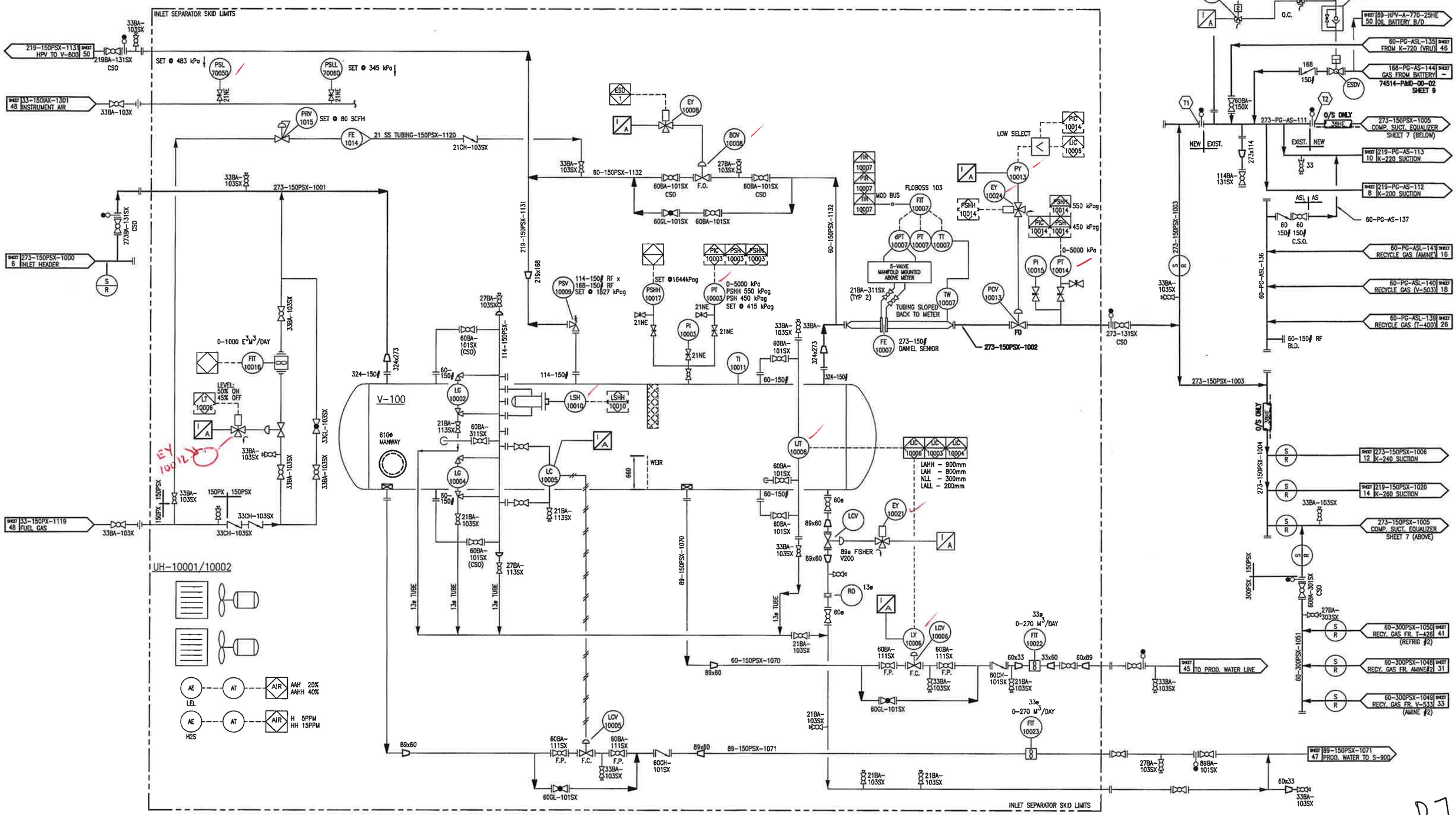

P.7